Bonfiglioli
Forever Forward

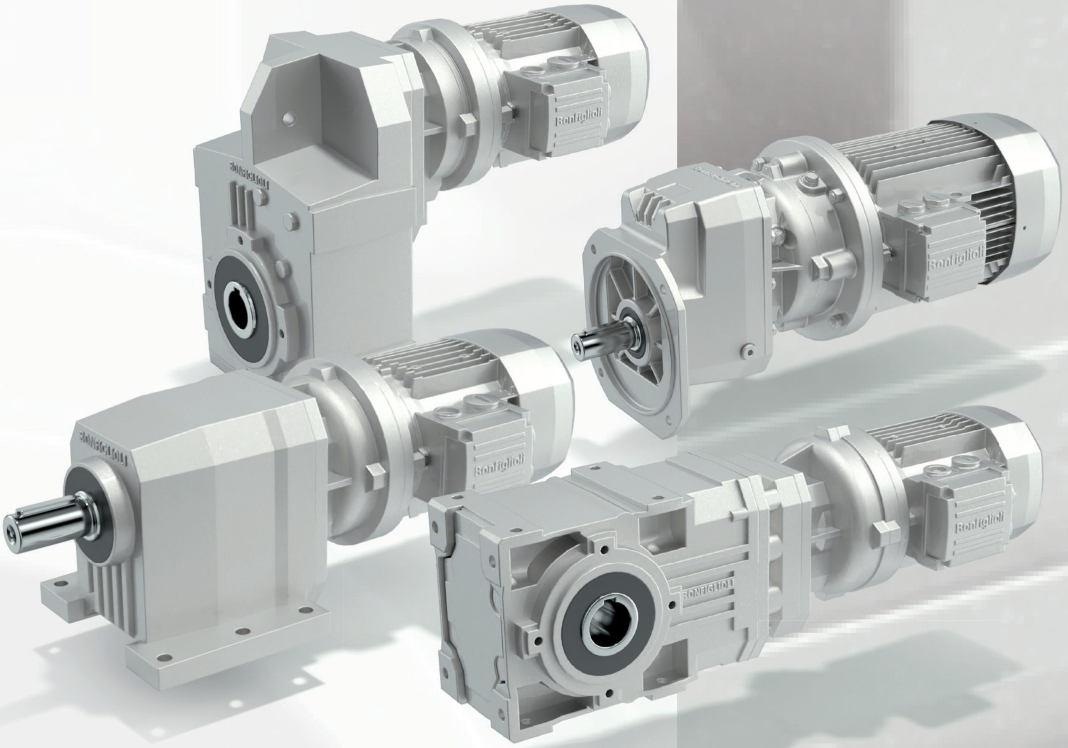

Baureihe C-A-F-S

Stirnradgetriebe Baureihe C
Kegelradgetriebe Baureihe A
Aufsteckgetriebe Baureihe F
Stirnradgetriebe (einstufig) Baureihe S

PRODUKTE &
LÖSUNGEN

Abschnitt	Beschreibung	Seite
ALLGEMEINE INFORMATIONEN		**2**
1	Symbole und Maßeinheiten	2
2	Zulässige Temperaturgrenzen	4
3	Abtriebsmoment	5
4	Leistung	5
5	Thermische Grenzleistung	5
6	Wirkungsgrad	7
7	Getriebeübersetzung	8
8	Drehzahl	8
9	Trägheitsmoment	8
10	Betriebsfaktor	9
11	Schmierung	10
12	Antriebsauswahl	12
13	Prüfungen	15
14	Installation	16
15	Anbauanweisungen	17
16	Lagerung	18
17	Lieferbedingungen	18
18	Angaben zu den Antrichstoffe	18
STIRNRADGETRIEBE SERIE C		**20**
19	Konstruktive Eigenschaften	20
20	Bauformen	21
21	Bezeichnung	22
22	Einbaulagen und lage des klemmenkastens	26
23	Radialkräfte	29
24	Axialkräfte	32
25	Getriebemotorenauswahltabellen	33
26	Getriebe auswahltabellen	78
27	Baumöglichkeiten	100
28	Trägheitsmoment	103
29	Exakte übersetzung	122
30	Abmessungen	124
KEGELRADGETRIEBE SERIE A		**166**
31	Konstruktive Eigenschaften	166
32	Bauformen	167
33	Bezeichnung	168
34	Einbaulagen und lage des klemmenkastens	174
35	Radialkräfte	176
36	Axialkräfte	179
37	Wellendrehung	179
38	Getriebemotorenauswahltabellen	180
39	Getriebe auswahltabellen	224
40	Baumöglichkeiten	246
41	Trägheitsmoment	250
42	Exakte übersetzung	271
43	Abmessungen	273
44	Zubehör	317
45	Maschinachse	319

Abschnitt	Beschreibung	Seite
KEGELRADGETRIEBE SERIE A IN ATEX AUSFUEHRUNG		**322**
46	Beschreibung der atex-zulassung	322
47	Antriebsauswahl	325
48	Installations-und wartungsanleitung	326
49	Bauliche merkmale der atex-baugruppen	326
50	Bauformen	327
51	Bezeichnung	328
52	Weitere informationen über getriebe und getriebemotoren	329
AUFSTECKGETRIEBE SERIE F		**330**
53	Konstruktive Eigenschaften	330
54	Bauformen	331
55	Bezeichnung	332
56	Einbaulagen und lage des klemmenkastens	338
57	Radialkräfte	340
58	Axialkräfte	343
59	Getriebemotorenauswahltabellen	344
60	Getriebe auswahltabellen	382
61	Baumöglichkeiten	402
62	Trägheitsmoment	406
63	Exakte übersetzung	423
64	Abmessungen	424
65	Zubehör	461
66	Maschinachse	462
STIRNRADGETRIEBE-EINSTUFIG SERIE S		**464**
67	Konstruktive Eigenschaften	464
68	Bauformen	465
69	Bezeichnung	466
70	Einbaulagen und lage des klemmenkastens	471
71	Radialkräfte	474
72	Axialkräfte	476
73	Getriebemotorenauswahltabellen	477
74	Getriebe auswahltabellen	492
75	Baumöglichkeiten	497
76	Trägheitsmoment	498
77	Abmessungen	502
ELEKTROMOTOREN		**512**
M1	Symbole und Maßeinheiten	512
M2	Allgemeine Eigenschaften	513
M3	Mechanische Eigenschaften	516
M4	Elektrische Eigenschaften	520
M5	Drehstrombremsmotoren	526
M6	Drehstrombremsmotoren mit Gleichtrombremse: typ BN_FD	527
M7	Wechselstrombremsmotoren: typ BN_FA	531
M8	Brenslüfthebel	534
M9	Optionen	536
M10	Motorenauswahl tabellen	549
M11	Motorenabmessungen	566

Änderungen
Das Revisionsverzeichnis des Katalogs wird auf Seite 572 wiedergegeben.
Auf unserer Website www.bonfiglioli.com werden die Kataloge in ihrer letzten, überarbeiteten Version angeboten.

ALLGEMEINEINFORMATIONEN

1 SYMBOLE UND MAßEINHEITEN

Symbole	Meßeinh.	Beschreibung
$A_{N\ 1,2}$	[N]	Nenn-Axialbelastung
f_s	–	Betriebsfaktor
f_T	–	Temperaturfaktor
f_{TP}	–	Wärmefaktor
i	–	Übersetzung
I	–	Relative Einschaltdauer
J_C	[Kgm^2]	Massenträgheitsmoment der externen Massen
J_M	[Kgm^2]	Motorträgheitsmoment
J_R	[Kgm^2]	Getriebeträgheitsmoment
K	–	Massenbeschleunigungsfaktor
K_r	–	Belastungsfaktor der Radiallast
$M_{1,2}$	[Nm]	Drehmoment
$M_{c\ 1,2}$	[Nm]	Berechnetes Drehmoment
$M_{n\ 1,2}$	[Nm]	Nennmoment
$M_{r\ 1,2}$	[Nm]	Benötigtes Drehmoment
$n_{1,2}$	[min^{-1}]	Abtriebsdrehzahl

Symbole	Meßeinh.	Beschreibung
$P_{1,2}$	[kW]	Leistung
$P_{N\ 1,2}$	[kW]	Nennleistung
$P_{R\ 1,2}$	[kW]	Benötigte Leistung
$R_{C\ 1,2}$	[N]	Berechnete Axialbelastung
$R_{N\ 1,2}$	[N]	Zulässige Radialbelastung
S	–	Sicherheitsfaktor
t_a	[°C]	Umgebungstemperatur
t_s	[°C]	Oberflächentemperatur
t_o	[°C]	Öltemperatur
t_f	[min]	Betriebszeit während nennbetrieb
t_r	[min]	Stillstandszeit
η_d	–	Dynamischer Wirkungsgrad
η_s	–	Statischer Wirkungsgrad
φ	[']	Winkelspiel an Abtriebswelle (bei blockierter Antriebswelle)

$_1$ Werte beziehen sich auf die Antriebswelle

$_2$ Werte beziehen sich auf die Abtriebswelle

Das Symbol Kennzeichnet die Seite, auf die die Information gefunden werden kantn.

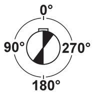

Dieses Symbol gibt die Winkelbezugswerte für die Angabe der Richtung der Radialkräfte an (Stirnansicht der Welle).

kg

Symbol für das Gewicht der Getriebe und der Getriebemotoren.
Die in der Getriebemotoren-Tabelle genannten Werte schließen das Gewicht des vierpoligen Motors und die eingefüllte Schmierstoffmenge ein, sofern von BONFIGLIOLI RIDUTTORI vorgesehen.

GEFAHR - ACHTUNG
Deutet auf gravierende Gefahrensituationen hin, die bei unvorsichtigem Handeln die Ge- sundheit und die Sicherheit des Personals großer Gefahr aussetzen können.

WICHTIG
Deutet auf besonders wichtige technische Informationen hin, die nicht unbeachtet bleiben sollten.

Beziehen sich auf Geräte, die der „ATEX“-Richtlinie entsprechen

Serie C	**Serie A**	**Serie F**	**Serie S**	
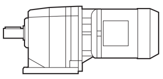	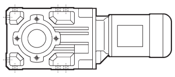	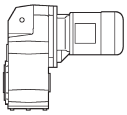	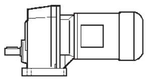	Getriebemotor mit Kompaktmotor.
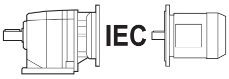	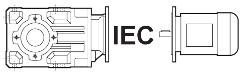	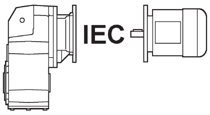	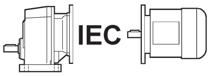	Getriebemotor mit IEC-Motor.
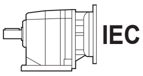	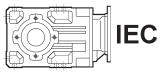	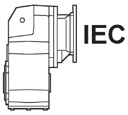	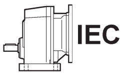	Getriebe vorbereitet für IEC-motor.
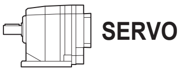	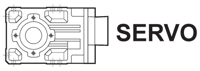	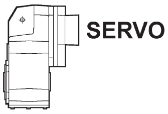		Getriebe vorbereitet für Servomotor.
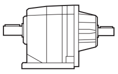	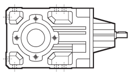	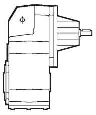	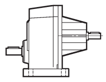	Getriebe mit cylindrischer Antriebswelle.

2 ZULÄSSIGE TEMPERATURGRENZEN

Symbol	Beschreibung / Bedingungen	Wert (*)	
		Synthetiköl	Mineralöl
t_a	Umgebungstemperatur		
$t_{au\ min}$	Minimum Umgebungstemperatur bei Betrieb	**-30°C**	**-10°C**
$t_{au\ Max}$	Maximum Umgebungstemperatur bei Betrieb	**+50°C**	**+40°C**
$t_{as\ min}$	Minimum Umgebungstemperatur während Lagerung	**-40°C**	**-10°C**
$t_{as\ Max}$	Maximum Umgebungstemperatur während Lagerung	**+50°C**	**+50°C**
t_s	Oberflächentemperatur		
$t_{s\ min}$	Minimum Getriebeoberflächentemperatur beim Start unter Teillast (#)	**-25°C**	**-10°C**
$t_{sc\ min}$	Minimum Getriebeoberflächentemperatur beim Start unter Volllast	**-10°C**	**-5°C**
$t_{s\ Max}$	Maximum Gehäuseoberflächentemperatur während Dauerbetrieb (am Getriebeeingang gemessen)	**+100°C**	**+100°C** (@)
t_o	Öltemperatur		
$t_{o\ Max}$	Maximum Öltemperatur während Dauerbetrieb	**+95°C**	**+95°C** (@)

(*) = Weitere Informationen gem. Tabelle “Auswahl der optimalen Ölviskosität” in Bezug auf min. und max. Werte bei unterschiedlichen Ölviskositäten. Für Werte von ta <-20°C und ts > 80 °C, müssen der Anwendung entsprechende Dichtwerkstoffe ausgewählt werden. Bei weiteren Fragen wenden Sie sich bitte an den Technischen Service von Bonfiglioli. ☎

(@) = Dauerbetrieb ist nicht empfehlenswert bei t_s und t_o im Bereich von 80°C bis 95°C

(#) = Für einen Start unter Volllast wird eine Hochlauframpe empfohlen. Bei weiteren Fragen wenden Sie sich bitte an den Technischen Service von Bonfiglioli. ☎

3 ABTRIEBSMOMENT

3.1 Nenn-Drehmoment M_{n2} [Nm]

Dies ist das an der Abtriebswelle übertragbare Drehmoment bei gleichförmiger Dauerbelastung bezogen auf die Antriebsdrehzahl n_1 und die entsprechende Abtriebsdrehzahl n_2.
Das Drehmoment wird auf Grundlage eines Betriebsfaktor $f_s = 1$ berechnet.

3.2 Verlangtes Drehmont M_{r2} [Nm]

Dies ist das von der Anwendung verlangte Drehmoment, das stets kleiner oder gleich dem Nenn-Abtriebsmoment M_{n2} des gewählten Getriebes sein muß.

3.3 Soll-Drehmoment M_{c2} [Nm]

Dies ist das bei der Wahl des Getriebes zugrundezulegende Drehmoment, wobei das übertragene Drehmoment M_{r2} und der Betriebsfaktor fs zu berücksichtigen sind; das Soll-Drehmoment wird mit folgender Gleichung berechnet:

$$\boxed{M_{c2} = M_{r2} \cdot f_s < M_{n2}} \quad (1)$$

4 LEISTUNG

4.1 Leistung Antriebswelle P_{n1} [kW]

In den Tabellen für die Wahl der Getriebe ist die an der Antriebswelle übertragbare Leistung auf die Drehzahl n_1 bezogen und es wurde ein Betriebsfaktor $f_s = 1$ angenommen.

5 THERMISCHE GRENZ- LEISTUNG P_t [kW]

P_t steht für den Wert der Wärmegrenzleistung des Getriebes und gibt die im Dauerbetrieb und bei einer Umgebungstemperatur $t_a = 20$ °C übertragbare Leistung an, ohne daß sich daraus Schäden an den Getriebebauteilen oder ein Verfall des Schmiermittels ergeben. Siehe Tab. (A1). Bei einem Aussetzbetrieb oder bei abweichender Umgebungstemperatur von 20°C muß der Wert P_t über den Faktor f_t korrigiert werden, der in der Tabelle (A2) aufgeführt wird bzw. $P_t' = P_t \times f_t$

Bei Getrieben mit mehr als zwei Untersetzungsstufen und/oder einer Untersetzung von i > 45 ist die Kontrolle der thermischen Leistung nicht erforderlich, da sie sicher oberhalb der mechanisch übertragbaren Leistung liegt.

(A 1)

P_t [kW] 20 °C		
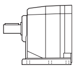	n_1 = 1400 min^{-1}	n_1 = 2800 min^{-1}
C 05 2	—	—
C 12 2	—	—
C 22 2	—	—
C 32 2	—	4.5
C 36 2	6.5	5.0
C 41 2	8.0	6.0
C 51 2	11.0	7.8
C 61 2	14.0	10.0
C 70 2	21	16.0
C 80 2	32	24
C 90 2	43	32
C 100 2	59	42

P_t [kW] 20 °C		
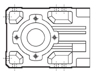	n_1 = 1400 min^{-1}	n_1 = 2800 min^{-1}
A 05 2	2.0	1.5
A 10 2	2.1	1.5
A 20 2	6.0	5.4
A 30 2	8.0	6.6
A 35 2	9.5	8.2
A 41 2	11.5	9.6
A 50 2	20	18.0
A 55 2	21	18.0
A 60 2	27	23
A 70 3	31	24
A 80 3	44	33
A 90 3	64	48

P_t [kW] 20 °C		
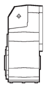	n_1 = 1400 min^{-1}	n_1 = 2800 min^{-1}
F 10 2	3.8	2.7
F 20 2	9.1	6.5
F 25 2	10.2	7.4
F 31 2	11.7	8.5
F 41 2	14.3	10.4
F 51 2	21.5	15.0
F 60 3	26.0	18.9
F 70 3	36.4	26.0
F 80 3	52	36
F 90 3	75	53

P_t [kW] 20 °C		
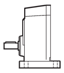	n_1 = 1400 min^{-1}	n_1 = 2800 min^{-1}
S 10 1	5.5	4.9
S 20 1	7.8	7.2
S 30 1	10.0	9.1
S 40 1	15.6	14.3
S 50 1	21	18.9

(A 2)

f_t					
t_a [°C]	Dauerbetrieb	Aussetzbetrieb			
		Relative Einschaltdauer [I]			
		80%	**60%**	**40%**	**20%**
40	0.80	1.1	1.3	1.5	1.6
30	0.85	1.3	1.5	1.6	1.8
20	1.0	1.5	1.6	1.8	2.0
10	1.15	1.6	1.8	2.0	2.3

Wobei die Einschaltdauer (I)% durch das Verhältnis zwischen Betriebszeit unter Last t_f und der Gesamtbetriebszeit (t_f + t_r), angegeben in Prozent, gegeben ist.

$$I = \frac{t_f}{t_f + t_r} \cdot 100 \qquad (2)$$

Die durchzuführende Kontrolle ist:

$$P_{r1} \leq P_t \ \times f_t \qquad (3)$$

6 WIRKUNGSGRAD

6.1 Dynamischer Wirkungsgrad η_d

Er ist gegeben durch das Verhältnis der Abtriebsleistung P_2 zur Antriebsleistung P_1:

$$\eta_d = \frac{P_2}{P_1} \cdot \ 100 \qquad [\%] \qquad (4)$$

(A 3)

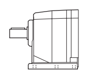	**2 x** ⚙	**3 x** ⚙	**4 x** ⚙
η_d	95%	93%	90%

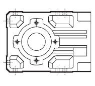	**2 x** ⚙	**3 x** ⚙	**4 x** ⚙
η_d	94%	91%	89%

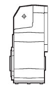	**2 x** ⚙	**3 x** ⚙	**4 x** ⚙
η_d	95%	93%	90%

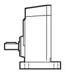	**1 x** ⚙
η_d	98%

7 GETRIEBEÜBERSETZUNG i

Die Übersetzung des Getriebes wird mit dem Buchstaben [i] bezeichnet und ist folgendermaßen definiert:

$$\boxed{i = \frac{n_1}{n_2}} \quad (5)$$

In diesem Katalog wird die Übersetzung mit einer Stelle hinter dem Komma angegeben, bei Übersetzungen > 1000 ohne Dezimalstelle.
Wenn genaue Angaben zur Übersetzung benötigt werden, Siehe Kapitel "EXAKTE ÜBERSETZUNG".

8 DREHZAHL

8.1 Drehzahl Antriebswelle n_1 [min^{-1}]

Dies ist die vom gewählten Motortyp abhängige Drehzahl.
Die Katalogangaben beziehen sich auf die Drehzahl von allgemeinüblichen eintourigen Elektromotoren oder von polumschatbaren Elektromotoren.
Um optimale Betriebsbedingungen zu gewährleisten, ist stets eine Antriebsdrehzahl unter 1400 min^{-1} zu empfehlen.
Höhere Antriebsdrehzahlen sind zulässig, wobei die zwangsläufige Herabsetzung des Nenn-Abtriebsdrehmoments M_{n2} des Getriebes zu berücksichtigen ist.

8.2 Abtriebsdrehzahl n_2 [min^{-1}]

Sie ist abhängig von der Antriebsdrehzahl n_1 und dem Übersetzungs i nach folgender Gleichung:

$$\boxed{n_2 = \frac{n_1}{i}} \quad (6)$$

9 TRÄGHEITSMOMENT J_r [Kgm^2]

Die im Katalog angegebenen Trägheitsmomente sind auf die Antriebswelle des Getriebes bezogen und daher im Falle einer direkten Verbindung schon zur Motordrehzahl in Beziehung gesetzt.

10 BETRIEBSFAKTOR f_s

Beim Betriebsfaktor handelt es sich um den Parameter, der die Betriebsbelastung, die das Getriebe aushalten muss, in einem Wert ausdrückt. Dabei berücksichtigt er, auch wenn nur mit einer unvermeidbaren Annäherung, den täglichen Einsatz, die unterschiedlichen Belastungen und eventuelle Überbelastungen, die mit der spezifischen Applikation des Getriebes verbunden sind. Der nachstehenden Grafik (A4) kann, nach der Wahl der entsprechenden Spalte mit der Angabe der täglichen Betriebsstunden der Betriebsfaktor entnommen werden, indem man die Schnittstelle zwischen der stündlichen Schaltungen und einer der Kurven K1, K2 und K3 sucht.
Die mit K_ gekennzeichneten Kurven sind über den Beschleunigungsfaktor der Massen K an die Betriebsart gekoppelt (annähernd: gleichmäßige, mittlere oder starke Belastung), der wiederum an das Verhältnis zwischen Trägheitsmoment der angetriebenen Massen und dem des Motors gebunden ist. Unabhängig von dem so erhaltenen Betriebsfaktor, möchten wir Sie darauf hinweisen, dass es Applikationen gibt, unter denen beispielsweise auch die Hebefunktionen zu finden sind, bei denen das Nachgeben eines Getriebeorgans, das in dessen Nähe arbeitende Personal einer Verletzungsgefahr aussetzen könnte. Sollten daher Zweifel darüber bestehen, ob die entsprechende Applikation sich in diesem Bezug als kritisch erweist, bitten wir Sie sich zuvor mit unseren Technischen Kundendienst in Verbindung zu setzen.

(A 4)

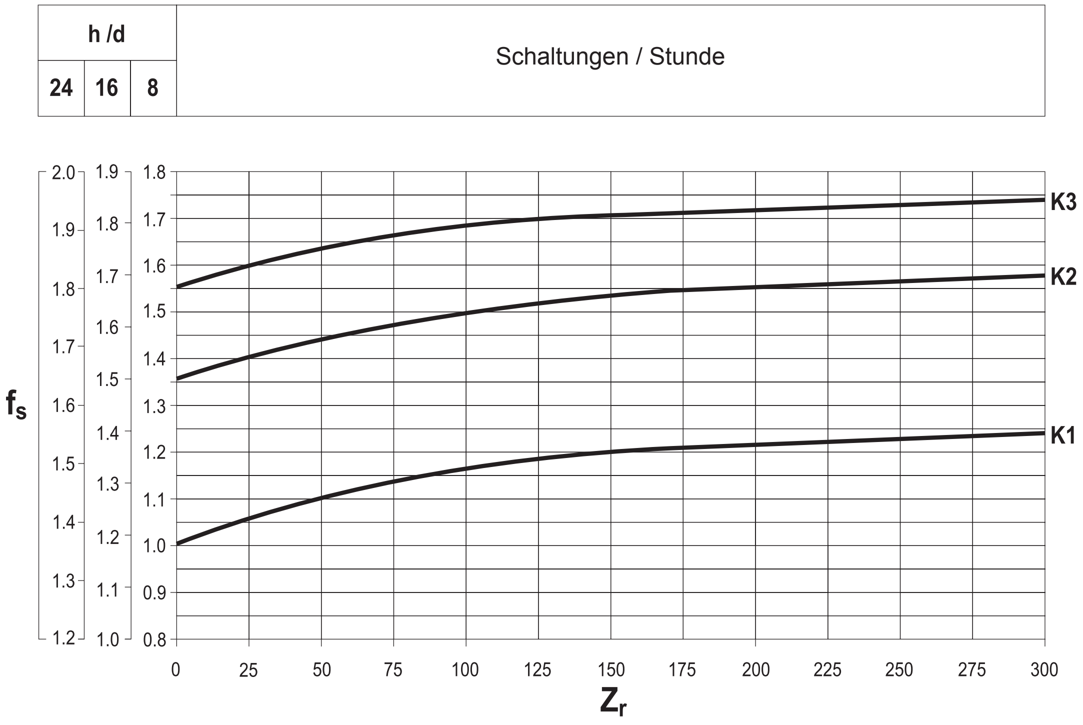

10.1 Beschleunigungsfaktor der Massen K

Dieser Parameter dient der Wahl der Kurve, die sich auf die jeweilige Belastungsart bezieht. Der Wert ergibt sich aus folgender Formel:

(A 5)

$$K = \frac{J_c}{J_m} \rightarrow$$

J_c = Trägheitsmoment der angetriebenen Massen, bezogen auf die Motorwelle

J_m = Trägheitsmoment des Motors

K ≤ 0,25	→ **K1**	Gleichmäßige Belastung
0,25 < K ≤ 3	→ **K2**	Belastung mit mäßigen Stößen
3 < K ≤ 10	→ **K3**	Belastung mit starken Stößen
K > 10	→	Bitten wir Sie, sich mit unseren Technischen. Kundendienst in Verbindung zu setzen

11 SCHMIERUNG

Die mit Dauerschmierung gelieferten Getriebe benötigen einen periodischen Ölwechsel.
Weitere Informationen in Bezug auf Wartungsintervalle, Ölstandskontrolle und Wechsel gem. Benutzerhandbuch unter www.Bonfiglioli.com
Mineralöl und Synthetiköl und/oder Öl von unterschiedlichen Herstellern darf nicht gemischt werden.
Es sollte jedoch bei Aussetzbetrieb einmal monatlich und bei Dauerbetrieb häufiger der Ölstand kontrolliert werden.
Falls notwendig, Öl nachfüllen.

11.1 Auswahl der optimalen Ölviskosität (Daten basierend auf Shell Ölen)

(A 6)

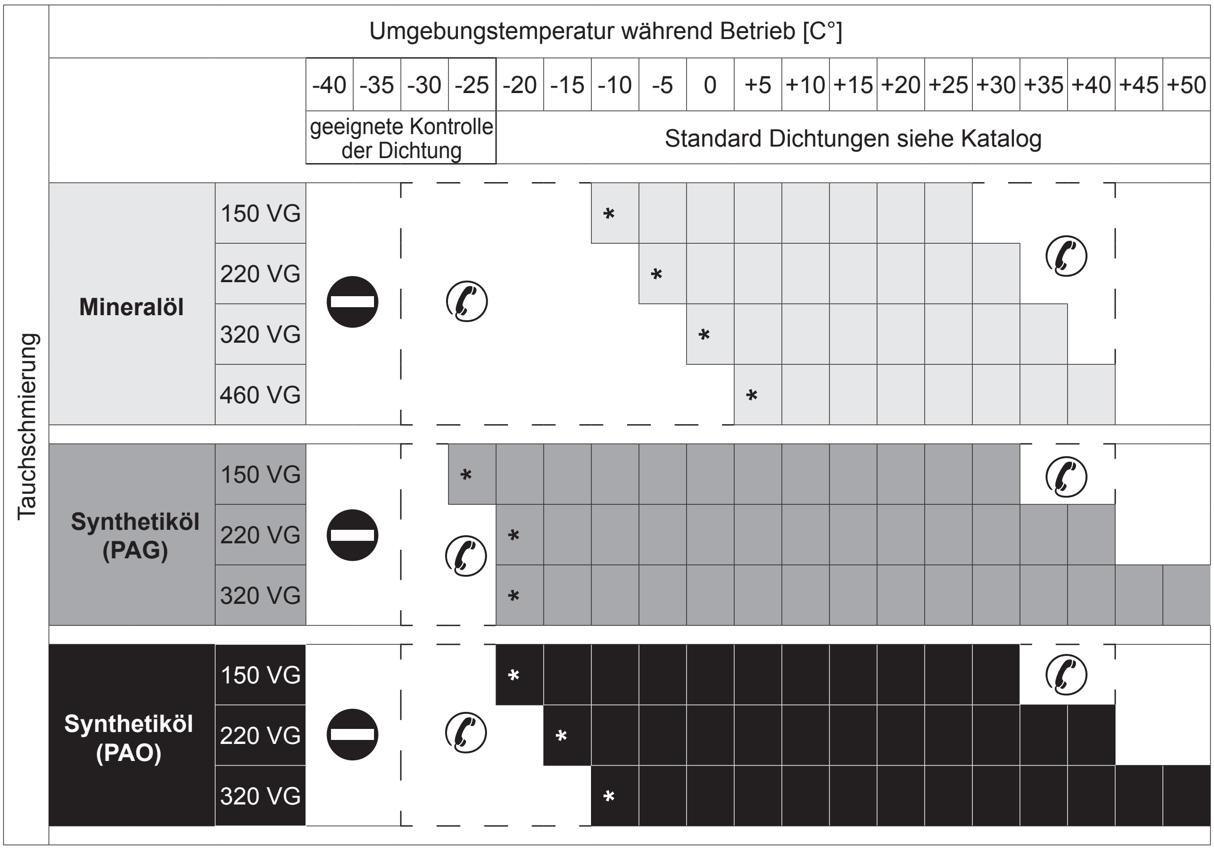
Umgebungstemperatur während Betrieb [C°]
-40 -35 -30 -25 -20 -15 -10 -5 0 +5 +10 +15 +20 +25 +30 +35 +40 +45 +50
geeignete Kontrolle der Dichtung
Standard Dichtungen siehe Katalog
Tauchschmierung
Mineralöl
150 VG
220 VG
320 VG
460 VG
Synthetiköl (PAG)
150 VG
220 VG
320 VG
Synthetiköl (PAO)
150 VG
220 VG
320 VG
*

☐ Empfohlene Grenzbetriebsdaten.

⬚ Zulässige Grenzbetriebsdaten. ☎

⛔ Unzulässige Grenzbetriebsdaten.

* = Eine Hochlauframpe wird empfohlen. Bei weiteren Fragen wenden Sie sich bitte an den Technischen Service von Bonfiglioli. ☎

11.2 Schmierung für Getriebe Serien C, A, F, S

Die Schmierung der Getriebe von Bonfiglioli erfolgt durch eine Kombination aus Ölbad- und Tauchschmierung.
Die Getriebegrößen C 05...C 41, A 05...A 41, F 10...F 41, S 10...S 40 sind ab Werk mit einer Lebensdauerschmierung versehen.
Die Getriebe ab der Größe C 51, A 50, F 51, S 50 werden ohne Ölfüllung ausgeliefert. Vor der Inbetriebnahme muss deshalb auf das Einfüllen der richtigen Ölfüllmenge geachtet werden!
In beiden Fälle, nach den Ausführungen, vor des Getriebe Inbetriebnahme, könnte notwendig sein, den geschlossen Pfropfen mit dem Entlueftungspfropfen, der zusammen mit dem Getriebe geliefert ist, zu wechseln.
Hinsichtlich der Bezugsübersichten mit der Einbaulage der Serviceschrauben/Stopfen und den Angaben zu den Schmierstoffmengen bitte die Betriebs- und Wartungsanleitung einsehen
(auf www.bonfiglioli.com verfügbar).
Die mit Lebensdauerschmierung gelieferten Serien sind mit synthetischem Öl auf Polyglykolbasis gefüllt. Falls dieses Öl nicht verunreinigt wird, ist während der Lebensdauer des Getriebes kein Ölwechsel nötig.

11.3 Schmierung für Getriebe Serie A-EX (Atex)

Die Schmierung der Getriebe von Bonfiglioli erfolgt durch eine Kombination aus Ölbad-und Tauchschmierung.
Die Getriebe in ATEX-Version werden, abgesehen von einigen Ausnahmen (siehe Tabelle folgende), in Übereinstimmung mit der angegebenen Einbaulage werkseitig mit einer bestimmten Menge des "Dauerschmiermittels" SHELL OMALA S4 WE 320 befüllt.

(A 7)

A 05	**A 10**	**A 20**	**A 30**	**A 35**	**A 41**	**A 50**	**A 55** 1)	**A 60 2** 2)	**A 60 3** 1)	**A 60 4** 1)	**A 70** 1)	**A 80** 1)	**A 90** 1)

░ Lieferung mit synthetischem "Dauerschmiermittel"
▓ Lieferung mit synthetischem schmiermittel

(1) Ohne Schmiermittel in den Einbaulagen B6 und B7
(2) Ohne Schmiermittel in den Einbaulagen B6, B7 und VB

Aus Transportgründen werden die Getriebe mit einem geschlossenen Einfüllstopfen geliefert und je nach Version mit einem Verschluss mit Entlüftungsventil versehen, der vor der Inbetriebnahme des Getriebes vom Betreiber ausgetauscht werden muss. Auch in diesem Fall ist die entsprechende Installations-, Betriebs- und Wartungsanleitung einzusehen (die Anleitung ist in verschiedenen Sprachen und im PDF-Format unter der Internetadresse www.bonfiglioli.com verfügbar), um Fehler beim Austausch zu vermeiden.
Auch in den Fällen, in denen das Getriebe ohne Schmiermittel geliefert wird, empfiehlt sich die anschließende Befüllung mit einem Schmieröl des gleichen Typs, von dem verschiedene zugelassene Marken in der entsprechenden Installations-, Betriebs- und Wartungsanleitung aufgeführt sind.

12 ANTRIEBSAUSWAHL

Um die Getriebe und Getriebemotoren richtig auswählen zu können, muß man über einige grundlegende Daten verfügen, die wir in der Tabelle (A8) zusammengefaßt haben.
Eine Kopie dieser vom Kunden ausgefüllten Tabelle kann an unseren Technischen Kundendienst geschickt werden, der dann die für die gewünschte Anwendung geeignete Auslegung wählt.

(A 8)

	Anwendung	
P_{r2}	Abtriebsleistung bei n_2 max	....................kW
P_{r2}'	Abtriebsleistung bei n_2 min	....................kW
M_{r2}	Puissance en sortie à n_2 min	....................Nm
n_2	Abtriebsdrehzahl max	....................min^{-1}
n_2'	Abtriebsdrehzahl min	....................min^{-1}
n_1	Antriebsdrehzahl max	....................min^{-1}
n_1'	Antriebsdrehzahl min	....................min^{-1}
R_{c2}	Radialkraft auf Abtriebswelle	....................N
x_2	Abstand des Kraftangriffspunktes (*)	....................mm
	Orientierung der Last am Abtrieb	.... 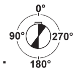
	Drehrichtung der Abtriebswelle (U-GU) (**)	....
R_{c1}	Radialkraft auf Antriebswelle	....................N
x_1	Abstand des Kraftangriffspunktes (*)	....................mm
	Orientierung der Last am Antrieb	.... 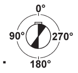
	Drehrichtung der Antriebswelle (U-GU) (**)	....
A_{c2}	Axialkraft auf Abtriebswelle (+/–)(***)	...................N

A_{c1}	Axialkraft auf Antriebswelle (+/–)(***)	...................N
J_c	Trägheitsmoment der Last	.................Kgm^2
t_a	Umgebungstemperatur	...................C°
	Höhe ü.d.M.	...................m
	Relative Einschaltdauer gemäß CEI	S........../......%
Z	Schaltungshäufigkeit	...................1/h
	Nennspannung des Motors	V
	Nennspannung der Bremse	V
	Frequenz	...................Hz
M_b	Bremsmoment	...................Nm
	Schutzart des Motors	IP.................
	Isolierstoffklasse	....

(*) Der Abstand x_{1-2} ist der Abstand vom Kraftangriffspunkt zum Wellenansatz (wenn nicht anders angegeben, wird davon ausgegangen, daß die Kraft auf der Mitte des Wellenendes angreift).

(**) U = Uhrzeigersinn;
GU = Gegenuhrzeigersinn

(***) + = Druck
– = Zug

Für die Auswahl von Getrieben in ATEX Ausführung, siehe Kapitel Seite 322

12.1 Wahl des Getriebemotors

a) Den Betriebsfaktor f_s in Abhängigkeit von der Belastungsart (Faktor K), den Schaltungen /Stunde Z_r und den Betriebs stunden bestimmen.

b) Aus dem Drehmoment M_{r2} mit Hilfe der bekannten Werte für n_2 und dem dynamischen Wirkungsgrad η_d die Antriebsleistung ableiten.

$$P_{r1} = \frac{M_{r2} \cdot n_2}{9550 \cdot \eta_d} \text{ [kW]} \qquad (7)$$

Für das gewählte Getriebe kann der Wert η_d aus Abschnitt 6 ermittelt werden.

c) Unter den Tabellen mit den Technischen Daten der Getriebemotoren die Tabelle auswählen, die folgender Leistung entspricht:

$$P_n \geq P_{r1} \qquad (8)$$

Wenn nicht anders angegeben, bezieht sich die im Katalog angegebene Leistung P_n der Motoren auf Dauerbetrieb S1. Bei Motoren, die unter anderen Bedingungen als S1 eingesetzt werden, muß die vorgesehen Betriebsart unter Bezug auf die CEI-Normen 2-3/IEC 34-1 bestimmt werden.
Insbesondere kann man für die Betriebsarten S2 bis S8 (und für Motorbaugrößen gleich oder niedriger als 132) eine Überdimensionierung der Leistung relativ zu der für den Dauerbetrieb vorgesehenen Leistung erhalten; die zu erfüllende Bedingung ist dann:

$$P_n \geq \frac{P_{r1}}{f_m} \qquad (9)$$

Der Überdimensionierungsfaktor f_m kann der Tabelle (A9) entnommen werden.

12.2 Relative Einschaltdauer

$$I = \frac{t_f}{t_f + t_r} \cdot 100 \qquad (10)$$

t_f = Betriebszeit mit konstanter Belastung
t_r = Aussetzzeit

(A 9)

	BETRIEB						
	S2			**S3***			**S4 - S8**
	Zyklusdauer [min]			Relative Einschaltdauer (I)			bitte unseren Technischen Kundendienst zu Rate ziehen
	10	**30**	**60**	**25%**	**40%**	**60%**	
f_m	1.35	1.15	1.05	1.25	1.15	1.1	

* Die Zyklusdauer muß in jedem Fall kleiner oder gleich 10 min sein; wenn sie darüber liegt, unseren Technischen Kundendienst zu Rate ziehen

Als nächstes wählen Sie anhand der Getriebemotorenauswahltabellen den Abschnitt mit der entsprechenden $\mathbf{P_n}$ und suchen die gewünschte Abtriebsdrehzahl $\mathbf{n_2}$, oder die nächstmögliche Drehzahl, zusammen mit dem Sicherheitsfaktor **S**, der den zutreffenden Betriebsfaktor $\mathbf{f_s}$ erreicht oder überschreitet.

Der Sicherheitsfaktor wird wie folgt berechnet:

$$S = \frac{M_{n2}}{M_2} = \frac{P_{n1}}{P_1} \qquad (11)$$

Standardmäßig stehen Getriebemotorenkombinationen mit 2, 4 und 6 poligen Motoren für eine Frequenz von 50 Hz zur Verfügung. Sollten die Antriebsdrehzahlen abweichend von 2800, 1400 oder 900 min^{-1} sein, dann stützen Sie die Auslegung des Getriebes auf die Getriebenenndaten.

12.3 Wahl des Getriebes und Getriebe für IEC-motoren

a) Den Betriebsfaktor f_s bestimmen.

b) Anhand des bekannten von der Anwendung geforderten Abtriebsdrehmoments M_{r2} das Soll-Drehmoment bestimmen:

$$M_{c2} = M_{r2} \cdot f_s \qquad (12)$$

c) Auf Grundlage der verlangten Abtriebsdrehzahl n_2 und der verfügbaren Antriebsdrehzahl n_1 die Übersetzungs berechnen:

$$i = \frac{n_1}{n_2} \qquad (13)$$

Anhand der Werte für M_{c2} und i in den Tabellen für die Drehzahl n_1 das Getriebe auswählen, das in Abhängigkeit von einer Übersetzung [i], die dem Sollwert möglichst nahe ist, folgendes Nenn-Drehmoment erlaubt:

$$\boxed{M_{n2} \geq M_{c2}} \qquad (14)$$

Wenn das Getriebe mit einem Elektromotor verbunden werden soll, die Verträglichkeit anhand der Tabelle der möglichen Anbaumöglichkeiten sicherstellen.

13 PRÜFUNGEN

Nachdem die Auswahl des Getriebe oder Getriebemotor abgeschlossen ist, werden die folgenden Schritte empfohlen:

a) Thermische Grenzleistung
Sicherstellen, daß die Wärmeleistung des Getriebes größer oder gleich der verlangten Leistung ist, die von der Anwendung nach Gleichung (3) auf S. 7 verlangt wird. Andernfalls ein größer dimensioniertes Getriebe wählen bzw. ein Zwangskühlsystem vorsehen.

b) Max. Drehmoment
Im allgemeinen darf das max. Drehmoment (verstanden als momentane Lastspitze), das auf das Getriebe aufgebracht werden kann, 200% des Nenndrehmoments M_{n2} nicht überschreiten.
Sicherstellen, daß dieser Grenzwert nicht überschritten wird, und nötigenfalls die entsprechenden Vorrichtungen zur Begrenzung des Drehmoments vorsehen.
Bei polumschaltbaren Drehstrommotoren muss dem Umschaltdrehmoment, das beim Umschalten von der hohen auf die niedrige Drehzahl erzeugt wird, besondere Aufmerksamkeit geschenkt werden, da es entschieden größer sein kann als das Nenn-Drehmoment.
Eine einfache und kostengünstige Methode zum Senken dieses Drehmoments besteht darin, daß nur zwei Phasen des Motors während des Umschaltens gespeist werden (die Dauer der Speisung von nur 2 Phasen kann durch ein Zeitrelais gesteuert werden):

$M_{g2} = 0.5 \cdot M_{g3}$
M_{g2} = Umschaltdrehmoment bei Speisung von 2 Phasen;
M_{g3} = Umschaltdrehmoment bei Speisung von 3 Phasen

Wir empfehlen jedoch in jedem Fall, unseren Technischen Kundendienst zu Rate zu ziehen.

c) Radialkräfte
Sicherstellen, daß die auf die Antriebswellen und/oder Abtriebswellen wirkenden Radialkräfte innerhalb der zulässigen Katalogwerte liegen.
Wenn sie höher sind, das Getriebe größer dimensionieren bzw. die Abstützung der Last verändern.
Wir erinnern daran, daß alle im Katalog angegebenen Werte sich auf Kräfte beziehen, die auf die Mitte des Wellenendes wirken. Diese Tatsache muß bei der Prüfung unbedingt berücksichtigt werden und nötigenfalls muß mit Hilfe der geeigneten Formeln die zulässige Kraft beim gewünschten Abstand x_{1-2} bestimmt werden. Siehe hierzu die Erläuterungen zu den Radialkräften in diesem Katalog.

d) Axialkräfte
Auch die eventuell vorhandenen Axialkräfte müssen mit den im Katalog angegebenen zulässigen Werten verglichen werden. Wenn sehr hohe Axialkräfte wirken oder Axialkräfte in Kombination mit Radialkräften, bitte unseren Technischen Kundendienst zu Rate ziehen.

e) Schaltungen/Stunde
Bei anderen Betriebsarten als S1 mit einem hohen Wert für die Schaltungen/Stunde muß der Faktor Z berücksichtigt werden (er kann mit Hilfe der Angaben im Kapitel Motoren bestimmt werden), der die max. zulässige Anzahl von Schaltvorgängen für eine bestimmte Anwendung definiert.

14 INSTALLATION

Für die Installation des Getriebes ist es äußerst wichtig, daß folgende Normen beachtet werden:

a) Sicherstellen, daß die Befestigung des Getriebes stabil ist, damit keine Schwingungen entstehen. Wenn es voraussichtlich zu Stößen, längerdauernden Überlasten oder zu Blockierungen kommen kann, sind entsprechende Schutzelemente wie hydraulische Kupplungen, Kupplungen, Rutschkupplungen usw. zu installieren.

b) Beim Lackieren die bearbeiteten Flächen und die Dichtringe schützen, damit der Anstrichstoff nicht den Kunststoff angreift und somit die Dichtigkeit der Ölabdichtungen in Frage gestellt wird.

c) Die Organe, die mit einer Keilverbindung auf der Abtriebswelle des Getriebes befestigt werden, müssen mit einer Toleranz ISO H7 gearbeitet sein, um allzu fest blockierte Verbindungen zu vermeiden, die eventuell zu einer irreparablen Beschädigung des Getriebes während des Einbaus führen könnten. Außerdem sind beim Ein- und Ausbau dieser Organe geeignete Zugstangen und Abzieher zu verwenden, wobei die Gewindebohrung an den Stirnseiten der Wellen zu verwenden ist.

d) Die Berührungsflächen müssen sauber sein und vor der Montage mit einem geeigneten Schutzmittel behandelt werden, um Oxidierung und die daraus folgende Blockierung der Teile zu verhindern.

e) Vor Inbetriebnahme des Getriebes muß man sich vergewissern, daß die das Getriebe beinhaltende Maschine gemäß den aktuellen Regelungen der Maschinen-Richtlinie 2006/42/EG ausgeführt ist.

f) Vor Inbetriebnahme der Maschine sicherstellen, daß die Anordnung der Füllstandschraube der Einbaulage entspricht, und die Viskosität des Schmiermittels den Vorgaben entspricht (finden Sie in der Bedienungsanleitung auf www.bonfiglioli.com).

g) Bei Inbetriebnahme in Freien muß man geeigneten Schutzgeräte vorsehen, um den Antrieb gegen Regen und direkte Sonnenstrahlung zu schützen.

14.1 Zur Montage eines Servomotors wird eine Klemmvorrichtung benötigt (Eingangsadapter Typ SC)

Klemmvorrichtung drehen bis die Markierung mit der Markierung der Eingangswelle übereinstimmt. Wenn die Motorwelle eine Passfeder hat, muss diese entfernt werden und die Passfedernut so gedreht werden, dass sie mit der Markierung der Eingangswelle fluchtet, erst dann kann der Motor montiert werden. Die Nut muss sich auf der gleichen Seite wie die Schraube befinden.
Ziehen Sie die Schrauben, die den Servomotoren halten, an. Stecken Sie einen Drehmomentschlüssel durch die seitliche Bohrung im Flansch und ziehen Sie die Schrauben in der Klemmvorrichtung mit dem für den Adapter vorgeschriebenen Moment (siehe Zeichnung) an.

15 ANBAUANWEISUNGEN

In den in Tabelle (A10) zu sehenden Bildern werden die 3 möglichen Fälle zum Anbau des Getriebes Typ A der zu betreibenden Maschine dargestellt. Für jeden dieser Fälle sind in Tabelle (A11) die Abmessungen der zu verwendenden Sechskantschrauben angegeben. Im übrigen schlagen wir für einen einfachen Anbau vor, den Schlüsseltyp entsprechend Tabelle (A10) zu verwenden.

(A 10)

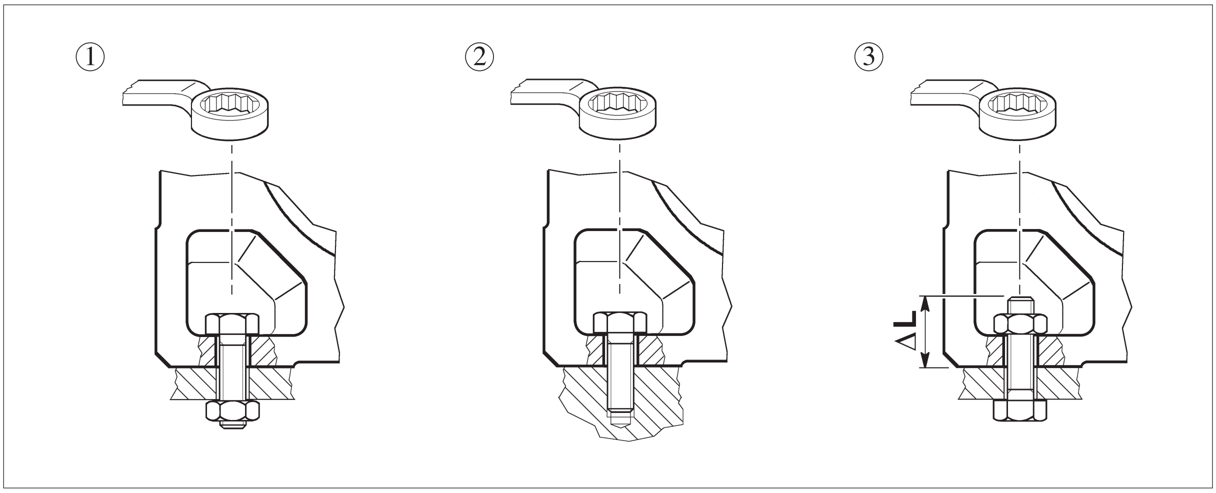

(A 11)

	Schraubentyp			
	①	②	③	ΔL (mm)
A 05	M8x22	M8x20	M8x ...	22
A 10	M8x25	M8x20	M8x …	20
A 20	M8x25	M8x20	M8x …	20
A 30	M10x30	M10x25	M10x …	25
A 35	M10x30	M10x25	M10x ...	25
A 41	M12x35	M12x30	M12x …	30

	Schraubentyp			
	①	②	③	ΔL (mm)
A 50	M14x45	M14x40	M14x …	35
A 55	M14x40	M14x40	M14x ...	35
A 60	M16x50	M16x45	M16x …	40
A 70	M20x60	M20x55	M20x …	45
A 80	M24x70	M24x65	M24x …	55
A 90	M24x90	M24x80	M24x …	65

16 LAGERUNG

Die korrekte Lagerung der Antriebe erfordert folgende Vorkehrungen:

a) Die Produkte nicht im Freien lagern und nicht in Räumen, die der Witterung ausgesetzt sind, oder eine hohe Feuchtigkeit aufweisen.

b) Die Produkte nie direkt auf dem Boden, sondern auf Unterlagen aus Holz oder einem anderen Material lagern.

c) Bei längeren Lager- und Aussetzzeiten müssen die Oberflächen für die Verbindung, wie Flansche, Wellen oder Kupplungen mit einem geeigneten Oxidationsschutzmittel behandelt werden (Mobilarma 248 oder ein äquivalentes Mittel).

Des weiteren müssen die Getriebe mit nach oben gerichteter Entlüftungsschraube gelagert und mit Öl gefüllt werden.
Die Getriebe müssen vor ihrer Verwendung mit der angegeben Menge des vorgesehenen Schmiermittels gefüllt werden (finden Sie in der Bedienungsanleitung auf www.bonfiglioli.com).

17 LIEFERBEDINGUNGEN

Die Getriebe werden in folgendem Zustand geliefert:

a) schon bereit für die Montage in der bei Bestellung festgelegten Einbaulage;

b) nach werksinternen Spezifikationen geprüft;

c) die Verbindungsflächen sind nicht lackiert;

d) ausgestattet mit Schrauben und Muttern für die Montage der Motoren (Version mit Adapter für IEC-Motoren);

e) alle Getriebe werden mit Kunststoffschutz auf den Wellen geliefert;

f) mit Transportierring zum Anheben (falls vorgesehen).

18 ANGABEN ZU DEN ANSTRICHSTOFFE

Die Spezifikation des Lackes, der auf den Getrieben (wo erforderlich) verwendet wurde, können bei den Filialen oder Verkaufsstellen, die die Gruppen geliefert haben, angefordert werden.

19 KONSTRUKTIVE EIGENSCHAFTEN

Die wichtigsten konstruktiven Eigenschaften sind:
- Baueinheitensystem
- Kompaktheit
- universelle Montage
- hohe Wirkungsgrade
- niedriger Geräuschpegel
- einsatzgehärtete und gehärtete Zahnräder aus legiertem Stahl
- Nicht lackierten Aluminiumgehäuse bei den Größen 05, 12, 22 und 32; hochwiderstandsfähige und lackierte Gußgehäuse bei den anderen Größen
- Antriebs-und Abtriebswellen aus hochwiderstandsfähigem Stahl.

(B 12)

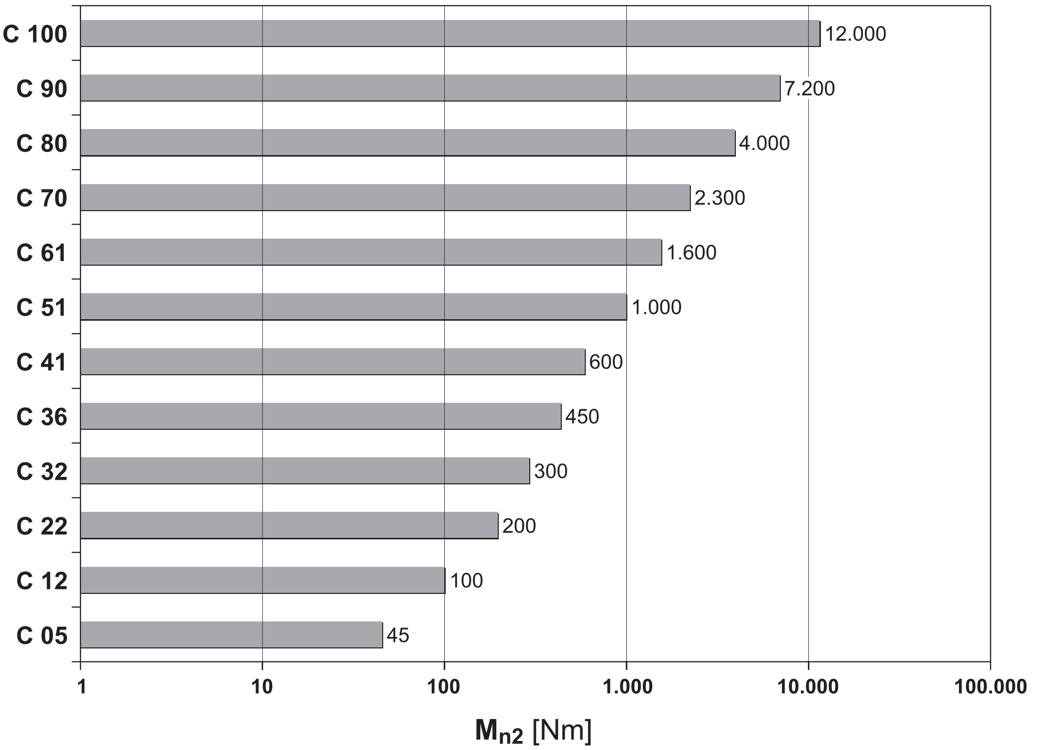

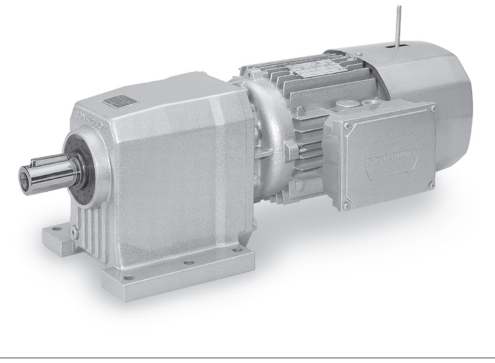

20 BAUFORMEN

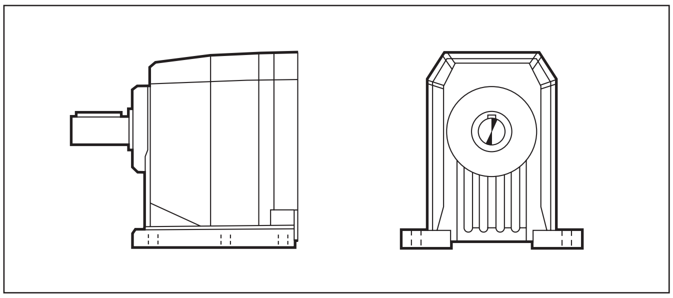

P

Mit integrierten Füßen

C 05 ... C 100

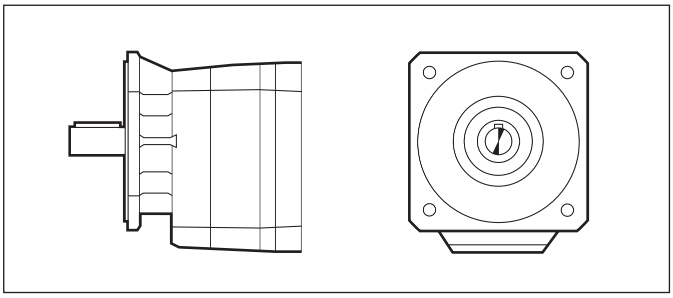

F

Mit integriertem Flansch

C 05 ... C 32
C 70 ... C 100

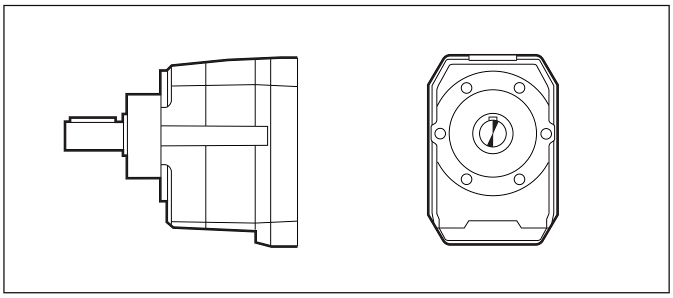

U

Universalgehäuse UNIBOX

C 12 ... C 61

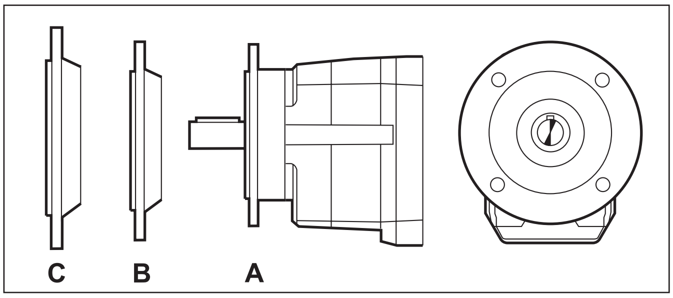

UF

UNIBOX aufgesetztem Flansch

C 12 ... C 61

21 BEZEICHNUNG

GETRIEBE

C 32 2 F 52.4 S1 B5 .....

OPTIONEN

EINBAULAGEN

C...P: **B3** (Standard), B6, B7, B8, V5, V6
C...F/U/UF: **B5** (Standard), B51, B53, B52, V1, V3

BEZEICHNUNG DER ANTRIEBSSEITE

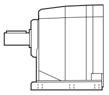
(C05...C100)

S05 ... S5

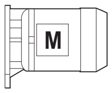

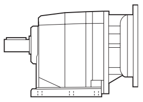
(C12...C100)

IEC_

P63 ... P280

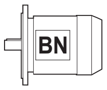

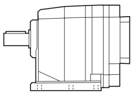
(C12...C61)

SK_

SC_

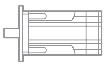

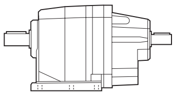
(C12...C100)

HS

ÜBERSETZUNG

BAUFORM

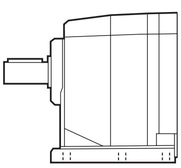
P
(C05...C100)

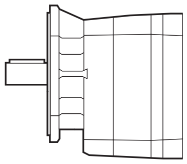
F
(C05...C32)
(C70...C100)

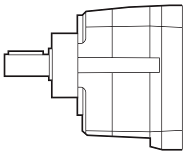
U
(C12...C61)

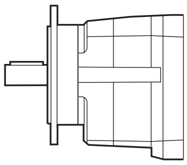
UFA
UFB
UFC
(C12...C61)

GETRIEBESTUFEN
2, **3**, **4**

GETRIEBEBAUGRÖSSE
05, **12**, **22**, **32**, **36**, **41**, **51**, **61**, **70**, **80**, **90**, **100**

TYP: **C** = Stirnradgetriebe

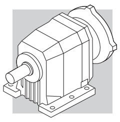

MOTOR | BREMSE

M **1LA** **4** 230/400-50 IP54 CLF ..... **W** **FD** 7.5 R SB 220 SA .....

OPTIONEN

BREMSVERSORGUNG

GLEICHRICHTERTYP
AC/DC
NB, **SB**, **NBR**, **SBR**

BREMSHANDLÜFTUNG
R, **RM**

BREMSMOMENT

BREMSENTYP
FD (G.S. Bremse)
FA (W.S. Bremse)

KLEMMKASTENLAGE
W (default), **N**, **E**, **S**

BAUFORM
— (Kompaktmotor)
B5 (IEC - Motor)

ISOLIERUNGSKLASSE
CL F Standard
CL H Option

SCHUTZART
IP55 Standard (IP54 - Bremssmotor)

SPANNUNG - FREQUENZ

POLZAHL
2, **4**, **6**, **2/4**, **2/6**, **2/8**, **2/12**, **4/6**, **4/8**

MOTOR-BAUGRÖSSE

0B ... 5LA	(Kompaktmotor)
63A ... 280SB	(IEC - Motor)

MOTORTYP
M = Dreiphasen Kompaktmotor
BN = Dreiphasen IEC Motor

21.1 Getriebe Optionen

SO
Bei Lieferung ohne Schmierstoff (nur bei C05, C12, C22, C32, C36 und C41).

LO
Für Getriebe C51, C61, C70, C80, C90, C100 die gewöhnlich ohne Schmiermittel geliefert werden, in Übereinstimmung mit der Einbaulage gefüllt mit dem normalerweise von BONFIGLIOLI RIDUTTORI verwendeten synthetischen Schmierstoff.

DL
Die Abtriebswelle ist mit Doppeldichtring geliefert.

DV
2 Wellendichtringe auf der eintreibenden Welle. (Nur für Kompaktgetriebemotoren).

VV
Wellendichtringe aus Fluor-Elastomer auf der eintreibenden Welle.

PV
Alle Wellendichtringe aus Fluor-Elastomer.

RB
Die Getriebe der Bauarten C12, C22, C32, C36, C41, C51 und C61, deren Lieferung in der Regel mit Winkelspiel-Standardwerten erfolgt, werden in diesem Fall mit reduzierten Winkelspielwerten geliefert. Die entsprechenden Winkelspielwerte sind in der nachstehenden Tabelle aufgeführt.

(B 13)

		standard			**RB**	
C 05	i =	5.5 ; 9.3 ; 15.6 ; 27.1	6.7 ; 7.4 ; 11.2 ; 12.5 ; 18.9 ; 21.0 ; 32.8_44.7		—	
	φ [']	**34**	**29**			
C 12	i =	2.8_6.2	7.6_66.2		2.8_6.2	7.6_66.2
	φ [']	**55**	**29**		**—**	**13**
C 22	i =	2.7_6.1	7.1_261.0		2.7_6.1	7.1_261.0
	φ [']	**47**	**25**		**—**	**12**
C 32	i =	2.9_6.3	7.2_274.7		2.9_6.3	7.2_274.7
	φ [']	**39**	**21**		**—**	**11**
C 36	i =	2.7_5.8	6.8_19.0	22.1_848.5	2.7_5.8	6.8_848.5
	φ [']	**37**	**20**	**17**	**—**	**10**
C 41 2	i =	2.7_6.0	6.4_44.8	—	2.7_6.0	6.4_44.8
	φ [']	**34**	**17**		**—**	**9**
C 41 3/4	i =	**—**	**—**	28.5_855.5	**—**	28.5_855.5
	φ [']			**15**		**9**
C 51 2	i =	2.6_5.6	7.0_57.0	—	2.6_5.6	7.0_57.0
	φ [']	**32**	**15**		**—**	**8**
C 51 3/4	i =	**—**	**—**	21.8_884.9	**—**	21.8_884.9
	φ [']			**13**		**8**
C 61 2	i =	2.8_6.0	6.7_38.0	—	2.8_6.0	6.7_38.0
	φ [']	**27**	**13**		**12**	**7**
C 61 3/4	i =	**—**	**—**	26.8_796.1	**—**	26.8_796.1
	φ [']			**11**		**7**
C 70	i =	4.6_34.7	41.3_1476		—	
	φ [']	**18**	**20**			
C 80	i =	5.6_39.1	43.5_1481		—	
	φ [']	**16**	**18**			
C 90	i =	5.2_35.1	39.4_1240		—	
	φ [']	**16**	**18**			
C 100	i =	4.9_29.6	34.3_1081		—	
	φ [']	**14**	**16**			

Für die Lieferzeiten, wenden Sie sich, bitte, an das Vertriebsnetz Bonfiglioli

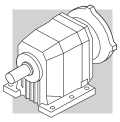

OBERFLÄCHENSCHUTZ

Wenn keine besondere Korrosionsschutzklasse gefordert ist, ist die lackierte Oberfläche des Getriebes mindestens mit einem Schutz gegen Korrosion der Klasse C2 nach UNI EN ISO 12944-2 geschützt Für eine bessere Witterungsbeständigkeit können die Getriebe, durch eine Lackierung des ganzen Getriebes, mit einem Oberflächenschutz der Klassen **C3** und **C4** geliefert werden.

(B 14)

OBERFLÄCHENSCHUTZ	Typische Umgebungen	Maximale Oberflächen-temperatu	Korrosionsschutzklasse nach UNI EN ISO 12944-2
C3	Stadt- und Industrieumgebung mit bis zu 100% relativer Luftfeuchtigkeit (mittlere Luftverschmutzung)	120°C	C3
C4	Industrie- und Küstengebiete und Chemieanlagen mit bis zu 100% relativer Luftfeuchtigkeit (hohe Luftverschmutzung)	120°C	C4

Getriebe mit einem optionalen Korrosionsschutz der Klassen **C3** oder **C4** sind in einer Auswahl von Farben verfügbar. Wenn keine spezielle Farbe gefordert ist, (siehe Option „Lackierung“) ist der Decklack in RAL 7042.
Unsere Getriebe können auch mit Oberflächenschutz der Klasse **C5** nach UNI EN ISO 12944-2 versehen werden. Für weitere technische Informationen wenden Sie bitte an unseren Technischen Service.

LACKIERUNG

Getriebe mit Oberflächenschutz der Klasse C3 oder C4, sind in den, in der folgenden Liste aufgelisteten Farben, verfügbar.

(B 15)

LACKIERUNG	Farbe	RAL Nummer
RAL7042*	Traffic Grey A	7042
RAL5010	Gentian Blue	5010
RAL9005	Jet Black	9005
RAL9006	White Aluminium	9006
RAL9010	Pure White	9010

* Die Getriebe werden in dieser Standardfarbe geliefert, wenn keine andere Farbe angegeben ist.

Hinweis – Die Option “Lackierung” kann nur im Zusammenhang mit dem Oberflächenschutz spezifiziert werden.

NACHWEISE

AC - Konformitätsbescheinigung Dokument mit dessen Ausstellung die Konformität des Produkts mit dem Auftrag, und dessen Konstruktion in Konformität mit den vom Qualitätsmanagementsystem von Bonfiglioli Riduttori vorgesehenen Standardfertigungs- und -kontrollverfahren bescheinigt wird.

CC – Prüfzeugnis
Die Bestellung führt zur Durchführung von Kontrollen der Konformität mit dem Auftrag, allgemeinen Sichtkontrollen und instrumentalen Prüfungen der Passmaße. Des Weiteren werden allgemeine Betriebskontrollen bei Leerlauf sowie Prüfungen der Funktionalität der Dichtungen bei Stillstand und während des Betriebs durchgeführt. Die Prüfung wird anhand einer Stichprobe des Versandloses durchgeführt.

21.2 Optionen Motoren

AL, AR
Für Getriebemotoren mit Integralmotor der Baureihe M steht die Option Rücklaufsperre zur Verfügung, welche auf dem Motor selbst installiert ist und im Abschnitt über die Elektromotoren in diesem Katalog beschrieben wird. Die folgende Tabelle zeigt die freie Drehrichtung des Getriebemotors, anhand welcher die Option entsprechend gewählt werden muss.

(B 16)

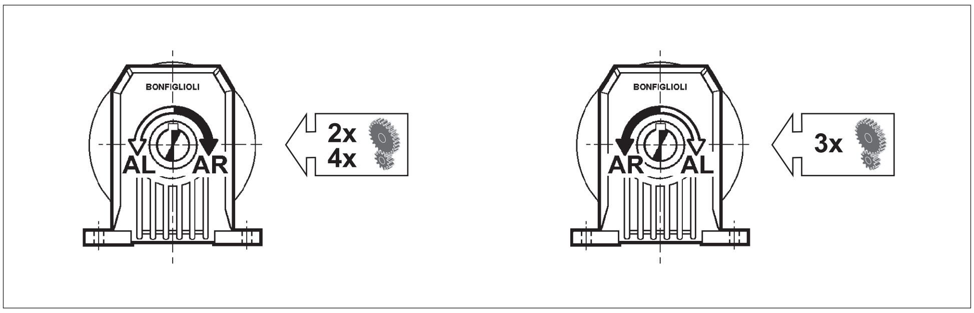

Siehe die Kapitel im Teil Elektromotoren für weitere informationen.

22 EINBAULAGEN UND LAGE DES KLEMMENKASTENS

Die Angaben zur Lage des Klemmenkastens beziehen sich auf das von der Lüfterseite her betrachtete Getriebe. Die Standardorientierung ist schwarz hervorgehoben (W).

Winkellage des Handlüfterhebels.
Bei Bremsmotoren wird der Handlüfterhebel (auf Anfrage) standardmäßig auf 90° gegenüber des Klemmkastens (AB-Anordnung) geliefert; wird eine andere Anordnung verlangt, muß dies bei der Bestellung durch das geeignete Option angegeben werden.

(B 17)

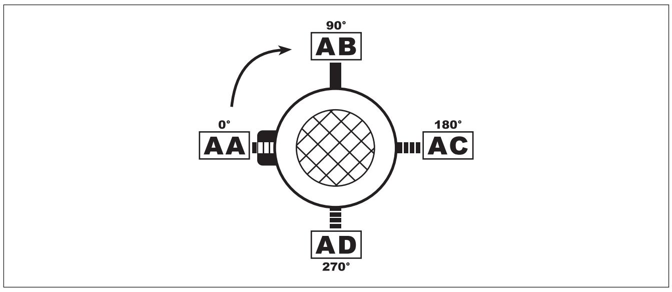

C ... P

B3

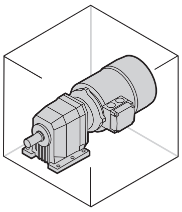

_S

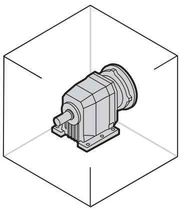

_P(IEC) _SK / _SC

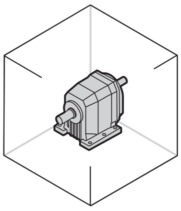

_HS

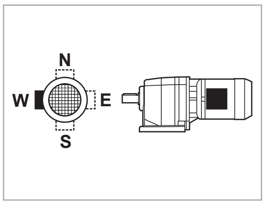

B7

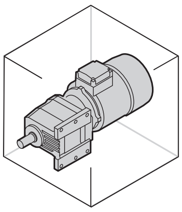

_S

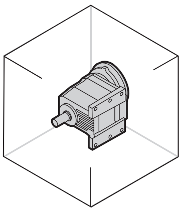

_P(IEC) _SK / _SC

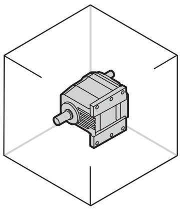

_HS

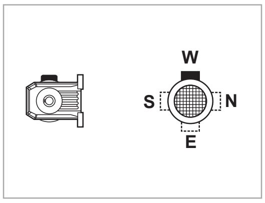

V5

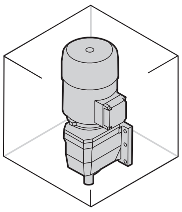

_S

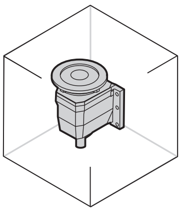

_P(IEC) _SK / _SC

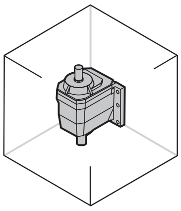

_HS

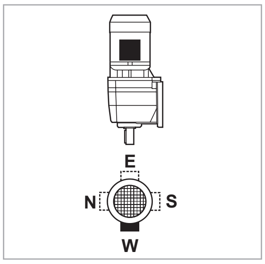

B6

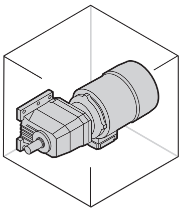

_S

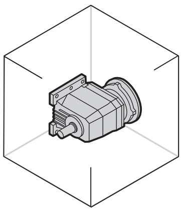

_P(IEC) _SK / _SC

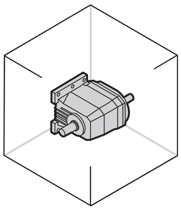

_HS

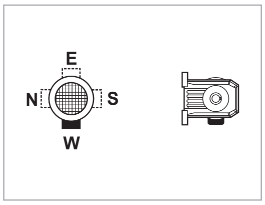

B8

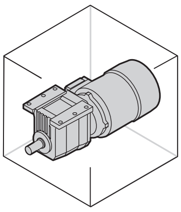

_S

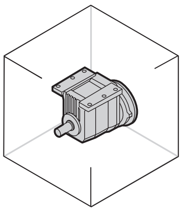

_P(IEC) _SK / _SC

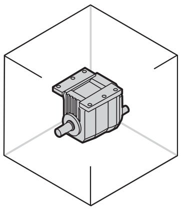

_HS

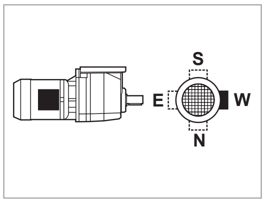

V6

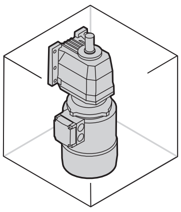

_S

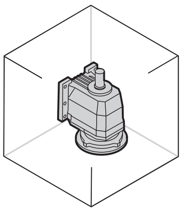

_P(IEC) _SK / _SC

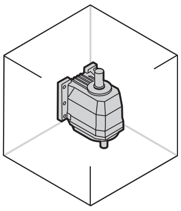

_HS

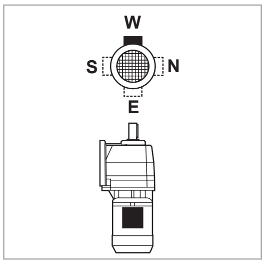

W = Default

C ... F C ... U C ... UF

B5

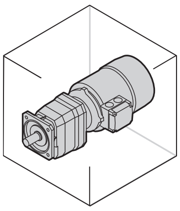

_S

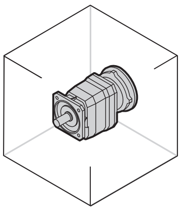

_P(IEC) _SK / _SC

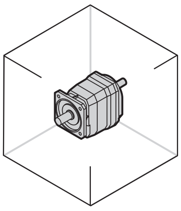

_HS

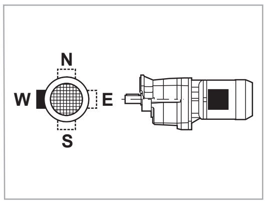

B53

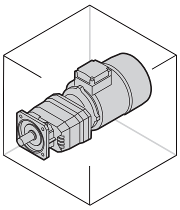

_S

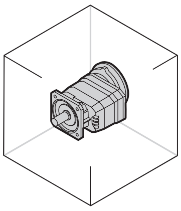

_P(IEC) _SK / _SC

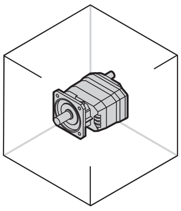

_HS

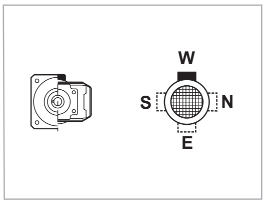

V1

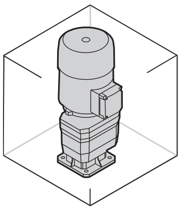

_S

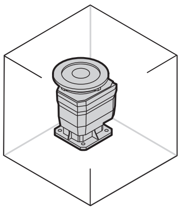

_P(IEC) _SK / _SC

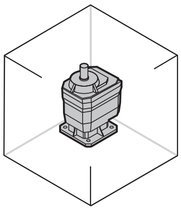

_HS

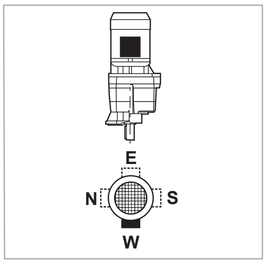

W = Default

B51

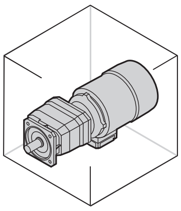

_S

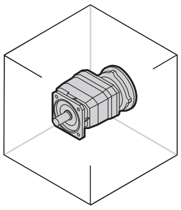

_P(IEC) _SK / _SC

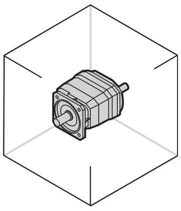

_HS

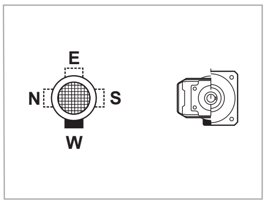

B52

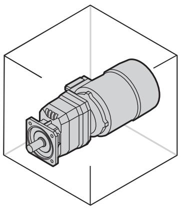

_S

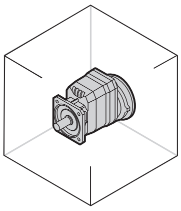

_P(IEC) _SK / _SC

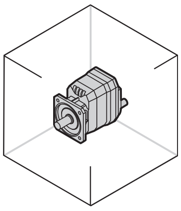

_HS

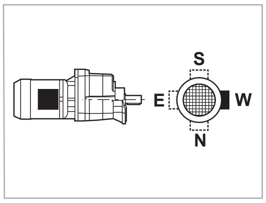

V3

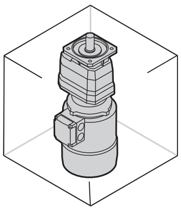

_S

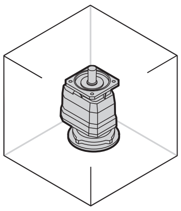

_P(IEC) _SK / _SC

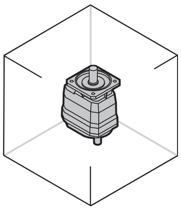

_HS

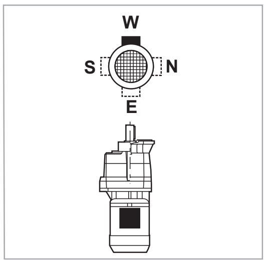

23 RADIALKRÄFTE

Die mit den Antriebs- und/oder Abtriebswellen des Getriebes verbundenen Antriebsorgane bilden Kräfte, die in radiale Richtung auf die Welle selbst wirken.
Das Ausmaß dieser Kräfte muß mit der Festigkeit des Systems aus Getriebewelle/-lager kompatibel sein, insbesondere muß der absolute Wert der angetragenen Belastung (R_{c1} für Antriebswelle und R_{c2} für Abtriebswelle) unter dem in den Tabellen der Technischen Daten angegebenen Nennwert (R_{n1} für Antriebswelle und R_{n2} für Abtriebswelle) liegen.
In den nachstehenden Formeln bezieht sich die Angabe (1) auf die Maße der Antriebswelle, die Angabe (2) auf die Abtriebswelle.
Die von einem externen Antrieb erzeugte Kraft kann, recht genau, anhand der nachstehenden Formel berechnet werden:

$$R_{c1}\left[N\right] = \frac{2000 \cdot M_1\left[Nm\right] \cdot K_r}{d\left[mm\right]} \quad ; \quad R_{c2}\left[N\right] = \frac{2000 \cdot M_2\left[Nm\right] \cdot K_r}{d\left[mm\right]} \qquad (15)$$

(B 18)

M_1 [Nm]	Drehmoment an der Antriebswelle
M_2 [Nm]	Drehmoment an der Abtriebswelle
d [mm]	Teilkreisdurchmesser von auf der Abtriebswelle montiertem Bauteil
K_r = 1	Kettenantrieb

K_r = 1,25	Zahnradantrieb
K_r = 1,5	Antrieb über Keilriemen
K_r = 2,0	Antrieb über Flachriemen

In Abhängigkeit zum Kraftanangriffspunkt an der Welle erfolgt die Kontrolle hinsichtlich der Kompatibilität in unterschiedlicher Weise und insbesondere:

(B 19)

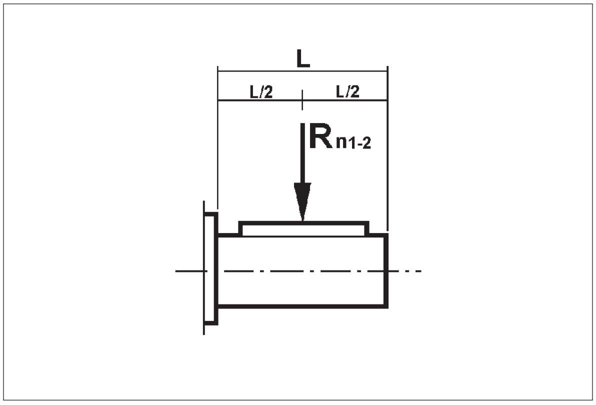

(B 20)

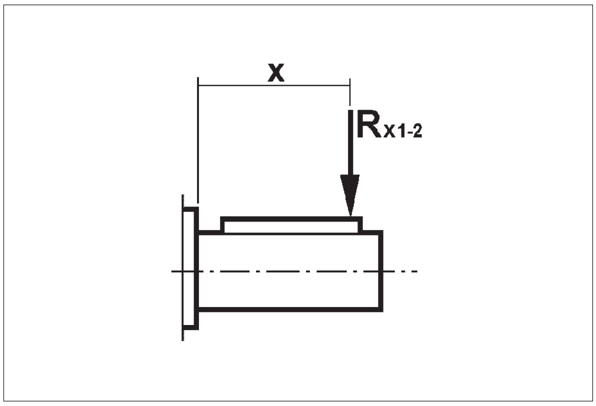

a) Kraftangriffspunkt in der Mitte, Tab. (B19)

Der zuvor errechnete Wert muß mit dem im Katalog angegebenen Nennwert verglichen werden. Es muß sich folgendes ergeben:

$R_{c1} \leq R_{n1}$ [Antriebswelle]

oder

$R_{c2} \leq R_{n2}$ [Abtriebswelle]

b) Von der Mitte versetzter Kraftangriffspunkt Tab. (B20)

Der auf einer Distanz “x” vom Wellenansatz liegende Kraftangriffspunkt fordert eine erneute Berechnung des für diesen Abstand zulässigen Werts.
Der neue Wert wird mit den Symbolen R_{x1} (Antrieb) und R_{x2} (Abtrieb) gekennzeichnet und unter Anwendung der nachstehenden Faktorenberechnung aus den Katalog- werten R_{n1} und R_{n2}:

$$\boxed{\frac{a}{b+x}} \qquad (16)$$

(B 21)

	Getriebekonstanten					
	Abtriebswelle			Antriebswelle		
	a	**b**	**c**	**a**	**b**	**c**
C 05 2	38	18	250	—	—	—
C 12 2	46	26	450	21	1	300
C 22 2	53	28	550	40	20	350
C 22 3	53	28	550	21	1	300
C 32 2	60.5	30.5	750	41.5	21.5	350
C 32 3	60.5	30.5	750	21	1	300
C 36 2 - C 36 3	69.5	34.5	800	51.5	26.5	450
C 36 4	69.5	34.5	800	21	1	300
C 41 2 - C 41 3	69.5	34.5	850	51.5	26.5	450
C 41 4	69.5	34.5	850	40	20	350
C 51 2 - C 51 3	76.5	36.5	900	51.5	26.5	450
C 51 4	76.5	36.5	900	41.5	21.5	350
C 61 2 - C 61 3	95.5	45.5	1000	57.5	27.5	450
C 61 4	95.5	45.5	1000	51.5	26.5	450
C 70 2 - C 70 3	114	54	1200	86	31	1000
C 70 4	114	54	1200	49.5	24.5	450
C 80 2 - C 80 3	131	61	1500	86	31	1000
C 80 4	131	61	1500	49.5	24.5	450
C 90 2 - C 90 3	161	76	2000	116	46	1400
C 90 4	161	76	2000	49.5	24.5	450
C 100 2 - C 100 3	163.5	58.5	2500	116	46	1400
C 100 4	163.5	58.5	2500	49.5	24.5	450

Das Kontrollverfahren zieht die nachstehend beschriebenen Schritte nach sich.

ANTRIESBWELLE

1. Berechnung von:

$$R_{x1} = R_{n1} \cdot \frac{a}{b+x} \tag{17}$$

HINWEIS unter der Bedingung, daß:

$$\frac{L}{2} \leq x \leq c \tag{18}$$

Dies als Voraussetzung, muß sich folgendes ergeben:

$$R_{c1} \leq R_{x1} \tag{19}$$

ABTRIEBSWELLE

1. Berechnung von:

$$R_{x2} = R_{n2} \cdot \frac{a}{b+x} \tag{20}$$

HINWEIS unter der Bedingung, daß:

$$\frac{L}{2} \leq x \leq c \tag{21}$$

Dies als Voraussetzung, muß sich folgendes ergeben:

$$R_{c2} \leq R_{x2} \tag{22}$$

24 AXIALKRÄFTE, A_{n1}, A_{n2}

Die Werte der zulässigen, auf die Antriebswelle [A_{n1}] und auf die Abtriebswelle [A_{n2}] einwirkenden Axialkräfte können unter Bezugnahme auf den jeweiligen Wert der Radialkraft [R_{n1}] und [R_{n2}] anhand der nachstehenden Angaben berechnet werden:

$$\boxed{\begin{aligned} A_{n1} &= R_{n1} \cdot 0.2 \\ A_{n2} &= R_{n2} \cdot 0.2 \end{aligned}} \qquad (23)$$

Die so errechneten Werte der zulässigen Axialkräfte beziehen sich auf den Fall, in dem die Axialkräfte gleichzeitig mit den Nennradialkräften einwirken.
Nur im Fall, es keine Radialbelastung auf die Getriebewelle gibt, ist der Wert der zulässigen Axialbelastung [A_n] gleich zu 50% der zulässigen Radialbelastung [R_n] auf die gleiche Welle.
In Anwesenheit von übermäßigen Axialkräften, oder stark auf die Radialkräfte einwirkende Kräfte, wird im Hinblick auf eine genaue Kontrolle empfohlen, sich mit dem Technischen Kundendienst der Bonfiglioli Riduttori in Verbindung zu setzen.

0.09 kW

n_2 min-1	M_2 Nm	S	i	R_{n2} N	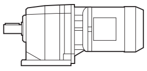		IEC	
1.0	760	0.8	855.5	7000	**C414_855.5 S05 M05A6**	142	**C414_855.5 P63 BN63A6**	143
1.2	654	0.9	735.9	7000	**C414_735.9 S05 M05A6**	142	**C414_735.9 P63 BN63A6**	143
1.3	597	1.0	671.3	7000	**C414_671.3 S05 M05A6**	142	**C414_671.3 P63 BN63A6**	143
1.5	511	0.9	574.7	6500	**C364_574.7 S05 M05A6**	138	**C364_574.7 P63 BN63A6**	139
1.6	483	1.2	543.5	7000	**C414_543.5 S05 M05A6**	142	**C414_543.5 P63 BN63A6**	143
1.9	407	1.1	458.4	6500	**C364_458.4 S05 M05A6**	138	**C364_458.4 P63 BN63A6**	139
2.0	400	1.5	450.2	7000	**C414_450.2 S05 M05A6**	142	**C414_450.2 P63 BN63A6**	143
2.6	301	1.5	341.7	6500	**C364_341.7 S05 M05A6**	138	**C364_341.7 P63 BN63A6**	139
2.6	296	2.0	333.4	7000	**C414_333.4 S05 M05A6**	142	**C414_333.4 P63 BN63A6**	143
3.2	250	1.1	274.7	5500	**C323_274.7 S05 M05A6**	134	**C323_274.7 P63 BN63A6**	135
3.9	205	1.0	225.8	5000	**C223_225.8 S05 M05A6**	130	**C223_225.8 P63 BN63A6**	131
4.1	196	1.5	215.6	5500	**C323_215.6 S05 M05A6**	134	**C323_215.6 P63 BN63A6**	135
4.9	162	1.2	178.5	5000	**C223_178.5 S05 M05A6**	130	**C223_178.5 P63 BN63A6**	131
5.8	138	1.5	151.7	5000	**C223_151.7 S05 M05A6**	130	**C223_151.7 P63 BN63A6**	131
5.9	135	2.2	148.4	5500	**C323_148.4 S05 M05A6**	134	**C323_148.4 P63 BN63A6**	135
7.2	111	1.8	122.2	5000	**C223_122.2 S05 M05A6**	130	**C223_122.2 P63 BN63A6**	131
7.2	111	2.7	122.4	5500	**C323_122.4 S05 M05A6**	134	**C323_122.4 P63 BN63A6**	135
7.9	102	2.0	112.0	5000	**C223_112.0 S05 M05A6**	130	**C223_112.0 P63 BN63A6**	131
8.8	91	2.2	100.2	5000	**C223_100.2 S05 M05A6**	130	**C223_100.2 P63 BN63A6**	131
10.7	75	2.7	82.6	5000	**C223_82.6 S05 M05A6**	130	**C223_82.6 P63 BN63A6**	131
13.3	61	1.5	66.2	2000	**C122_66.2 S05 M05A6**	126	**C122_66.2 P63 BN63A6**	127
16.0	51	1.8	55.2	2000	**C122_55.2 S05 M05A6**	126	**C122_55.2 P63 BN63A6**	127
18.5	44	2.0	47.6	2000	**C122_47.6 S05 M05A6**	126	**C122_47.6 P63 BN63A6**	127
19.7	42	1.1	44.7	1170	**C052_44.7 S05 M05A6**	125		
20.8	39	2.3	42.3	2000	**C122_42.3 S05 M05A6**	126	**C122_42.3 P63 BN63A6**	127
21.8	38	1.2	40.3	1150	**C052_40.3 S05 M05A6**	125		
23.8	34	2.6	37.0	2000	**C122_37.0 S05 M05A6**	126	**C122_37.0 P63 BN63A6**	127
24.2	34	1.3	36.4	1140	**C052_36.4 S05 M05A6**	125		
26.8	31	1.5	32.8	1110	**C052_32.8 S05 M05A6**	125		
26.8	31	2.9	32.8	2000	**C122_32.8 S05 M05A6**	126	**C122_32.8 P63 BN63A6**	127
30	27	1.7	44.7	1170	**C052_44.7 S0 M0B4**	125		
33	25	1.8	40.3	990	**C052_40.3 S0 M0B4**	125		
37	22	2.0	36.4	980	**C052_36.4 S0 M0B4**	125		
41	20	2.3	32.8	960	**C052_32.8 S0 M0B4**	125		
42	19	2.3	21.0	1020	**C052_21.0 S05 M05A6**	125		
50	16	2.7	27.1	930	**C052_27.1 S0 M0B4**	125		
56	15	3.1	15.6	950	**C052_15.6 S05 M05A6**	125		
66	12	6.5	13.4	2000	**C122_13.4 S05 M05A6**	126	**C122_13.4 P63 BN63A6**	127
71	12	3.9	12.5	900	**C052_12.5 S05 M05A6**	125		
74	11	7.0	11.9	2000	**C122_11.9 S05 M05A6**	126	**C122_11.9 P63 BN63A6**	127
78	10	4.3	11.2	880	**C052_11.2 S05 M05A6**	125		
88	9	7.7	10.1	2000	**C122_10.1 S05 M05A6**	126	**C122_10.1 P63 BN63A6**	127

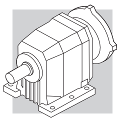

0.09 kW

n₂ min-1	M₂ Nm	S	i	Rₙ₂ N	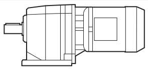			
95	9	5.2	9.3	830	**C052_9.3 S05 M05A6**	125		
100	8	8.4	8.8	2000	**C122_8.8 S05 M05A6**	126	**C122_8.8 P63 BN63A6**	127
119	7	6.5	7.4	780	**C052_7.4 S05 M05A6**	125		
132	6	7.3	6.7	760	**C052_6.7 S05 M05A6**	125		
146	6	10.9	6.2	1960	**C122_6.2 S05 M05A6**	126	**C122_6.2 P63 BN63A6**	127
157	5	11.1	5.6	1850	**C122_5.6 S05 M05A6**	126	**C122_5.6 P63 BN63A6**	127
159	5	8.8	5.5	720	**C052_5.5 S05 M05A6**	125		
187	4	12.6	4.9	1810	**C122_4.9 S05 M05A6**	126	**C122_4.9 P63 BN63A6**	127
205	4	13.0	4.3	1730	**C122_4.3 S05 M05A6**	126	**C122_4.3 P63 BN63A6**	127
249	3	15.0	3.7	1650	**C122_3.7 S05 M05A6**	126	**C122_3.7 P63 BN63A6**	127
275	3	15.4	3.2	1580	**C122_3.2 S05 M05A6**	126	**C122_3.2 P63 BN63A6**	127
329	2	17.3	2.8	1510	**C122_2.8 S05 M05A6**	126	**C122_2.8 P63 BN63A6**	127

0.12 kW

n₂ min-1	M₂ Nm	S	i	Rₙ₂ N	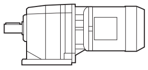			
0.98	1061	0.9	884.9	10000			**C514_884.9 P63 BN63B6**	147
1.2	860	1.2	717.7	10000			**C514_717.7 P63 BN63B6**	147
1.5	681	0.9	855.5	7000	**C414_855.5 S05 M05A4**	142	**C414_855.5 P63 BN63A4**	143
1.6	643	1.6	808.0	10000			**C514_808.0 P63 BN63A4**	147
1.7	621	1.0	780.4	7000	**C414_780.4 S05 M05A4**	142	**C414_780.4 P63 BN63A4**	143
1.8	586	1.0	735.9	7000	**C414_735.9 S05 M05A4**	142	**C414_735.9 P63 BN63A4**	143
2.0	534	1.1	671.3	7000	**C414_671.3 S05 M05A4**	142	**C414_671.3 P63 BN63A4**	143
2.0	509	0.9	665.9	6500	**C364_665.9 S05 M05A4**	138	**C364_665.9 P63 BN63A4**	139
2.2	474	1.3	595.8	7000	**C414_595.8 S05 M05A4**	142	**C414_595.8 P63 BN63A4**	143
2.3	440	1.0	574.7	6500	**C364_574.7 S05 M05A4**	138	**C364_574.7 P63 BN63A4**	139
2.4	433	1.4	543.5	7000	**C414_543.5 S05 M05A4**	142	**C414_543.5 P63 BN63A4**	143
2.6	396	1.1	517.2	6500	**C364_517.2 S05 M05A4**	138	**C364_517.2 P63 BN63A4**	139
2.7	393	1.5	493.5	7000	**C414_493.5 S05 M05A4**	142	**C414_493.5 P63 BN63A4**	143
2.9	351	1.3	458.4	6500	**C364_458.4 S05 M05A4**	138	**C364_458.4 P63 BN63A4**	139
2.9	358	1.7	450.2	7000	**C414_450.2 S05 M05A4**	142	**C414_450.2 P63 BN63A4**	143
3.1	333	1.8	418.5	7000	**C414_418.5 S05 M05A4**	142	**C414_418.5 P63 BN63A4**	143
3.2	321	1.4	420.2	6500	**C364_420.2 S05 M05A4**	138	**C364_420.2 P63 BN63A4**	139
3.4	304	2.0	381.8	7000	**C414_381.8 S05 M05A4**	142	**C414_381.8 P63 BN63A4**	143
3.6	289	1.6	377.9	6500	**C364_377.9 S05 M05A4**	138	**C364_377.9 P63 BN63A4**	139
3.9	265	2.3	333.4	7000	**C414_333.4 S05 M05A4**	142	**C414_333.4 P63 BN63A4**	143
4.0	261	1.7	341.7	6500	**C364_341.7 S05 M05A4**	138	**C364_341.7 P63 BN63A4**	139
4.2	244	1.8	318.9	6500	**C364_318.9 S05 M05A4**	138	**C364_318.9 P63 BN63A4**	139
4.3	242	2.5	304.2	7000	**C414_304.2 S05 M05A4**	142	**C414_304.2 P63 BN63A4**	143
4.6	223	2.0	290.9	6500	**C364_290.9 S05 M05A4**	138	**C364_290.9 P63 BN63A4**	139
4.9	219	0.9	178.5	5000	**C223_178.5 S05 M05B6**	130	**C223_178.5 P63 BN63B6**	131
4.9	217	1.2	274.7	5500	**C323_274.7 S05 M05A4**	134	**C323_274.7 P63 BN63A4**	135
5.0	209	2.9	263.0	7000	**C414_263.0 S05 M05A4**	142	**C414_263.0 P63 BN63A4**	143

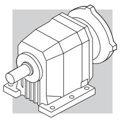

0.12 kW

n_2 min⁻¹	M_2 Nm	S	i	R_{n2} N	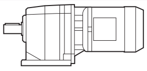			
5.3	195	2.3	255.0	6500	**C364_255.0 S05 M05A4**	138	**C364_255.0 P63 BN63A4**	139
5.5	193	1.3	244.2	5500	**C323_244.2 S05 M05A4**	134	**C323_244.2 P63 BN63A4**	135
5.8	177	2.5	230.9	6500	**C364_230.9 S05 M05A4**	138	**C364_230.9 P63 BN63A4**	139
6.0	178	1.0	225.8	5000	**C223_225.8 S05 M05A4**	130	**C223_225.8 P63 BN63A4**	131
6.3	170	1.8	215.6	5500	**C323_215.6 S05 M05A4**	134	**C323_215.6 P63 BN63A4**	135
6.5	163	2.8	206.4	6500	**C363_206.4 S05 M05A4**	138	**C363_206.4 P63 BN63A4**	139
6.7	159	1.2	200.7	5000	**C223_200.7 S05 M05A4**	130	**C223_200.7 P63 BN63A4**	131
7.3	147	2.0	186.0	5500	**C323_186.0 S05 M05A4**	134	**C323_186.0 P63 BN63A4**	135
7.4	145	3.1	183.5	6500	**C363_183.5 S05 M05A4**	138	**C363_183.5 P63 BN63A4**	139
7.6	141	1.4	178.5	5000	**C223_178.5 S05 M05A4**	130	**C223_178.5 P63 BN63A4**	131
8.1	132	2.3	167.4	5500	**C323_167.4 S05 M05A4**	134	**C323_167.4 P63 BN63A4**	135
8.9	120	1.7	151.7	5000	**C223_151.7 S05 M05A4**	130	**C223_151.7 P63 BN63A4**	131
9.1	117	2.6	148.4	5500	**C323_148.4 S05 M05A4**	134	**C323_148.4 P63 BN63A4**	135
9.9	108	1.9	136.5	5000	**C223_136.5 S05 M05A4**	130	**C223_136.5 P63 BN63A4**	131
9.9	108	2.8	136.0	5500	**C323_136.0 S05 M05A4**	134	**C323_136.0 P63 BN63A4**	135
11.0	97	3.1	122.4	5500	**C323_122.4 S05 M05A4**	134	**C323_122.4 P63 BN63A4**	135
11.0	97	2.1	122.2	5000	**C223_122.2 S05 M05A4**	130	**C223_122.2 P63 BN63A4**	131
12.1	89	2.3	112.0	5000	**C223_112.0 S05 M05A4**	130	**C223_112.0 P63 BN63A4**	131
13.5	79	2.5	100.2	5000	**C223_100.2 S05 M05A4**	130	**C223_100.2 P63 BN63A4**	131
15.3	70	2.9	88.5	5000	**C223_88.5 S05 M05A4**	130	**C223_88.5 P63 BN63A4**	131
16.3	65	3.1	82.6	5000	**C223_82.6 S05 M05A4**	130	**C223_82.6 P63 BN63A4**	131
20.4	53	1.7	66.2	2000	**C122_66.2 S05 M05A4**	126	**C122_66.2 P63 BN63A4**	127
21.3	51	2.5	63.3	5000	**C222_63.3 S05 M05A4**	130	**C222_63.3 P63 BN63A4**	131
24.5	45	2.0	55.2	2000	**C122_55.2 S05 M05A4**	126	**C122_55.2 P63 BN63A4**	127
24.7	44	3.5	54.7	5000	**C222_54.7 S05 M05A4**	130	**C222_54.7 P63 BN63A4**	131
28.4	38	2.3	47.6	2000	**C122_47.6 S05 M05A4**	126	**C122_47.6 P63 BN63A4**	127
29.3	37	1.2	44.7	1010	**C052_44.7 S05 M05A4**	125		
32	34	2.6	42.3	2000	**C122_42.3 S05 M05A4**	126	**C122_42.3 P63 BN63A4**	127
33	34	1.3	40.3	990	**C052_40.3 S05 M05A4**	125		
36	30	1.5	36.4	980	**C052_36.4 S05 M05A4**	125		
36	30	3.0	37.0	2000	**C122_37.0 S05 M05A4**	126	**C122_37.0 P63 BN63A4**	127
40	27	1.6	32.8	960	**C052_32.8 S05 M05A4**	125		
41	26	3.4	32.8	2000	**C122_32.8 S05 M05A4**	126	**C122_32.8 P63 BN63A4**	127
48	23	2.0	27.1	930	**C052_27.1 S05 M05A4**	125		
56	20	2.3	15.6	900	**C052_15.6 S05 M05B6**	125		
62	18	2.6	21.0	890	**C052_21.0 S05 M05A4**	125		
69	16	2.5	18.9	860	**C052_18.9 S05 M05A4**	125		
78	14	3.2	11.2	850	**C052_11.2 S05 M05B6**	125		
84	13	3.1	15.6	820	**C052_15.6 S05 M05A4**	125		
105	10	3.8	12.5	780	**C052_12.5 S05 M05A4**	125		
117	9	4.3	11.2	760	**C052_11.2 S05 M05A4**	125		
130	8	5.4	6.7	740	**C052_6.7 S05 M05B6**	125		
141	8	3.9	9.3	720	**C052_9.3 S05 M05A4**	125		
177	6	4.8	7.4	680	**C052_7.4 S05 M05A4**	125		
196	6	5.4	6.7	660	**C052_6.7 S05 M05A4**	125		

0.18 kW

n_2 min⁻¹	M_2 Nm	S	i	R_{n2} N	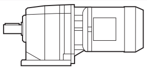		IEC	
0.66	2367	1.0	1362	25000			**C704_1362 P71 BN71A6**	155
0.84	1858	1.2	1069	25000			**C704_1069 P71 BN71A6**	155
1.2	1262	1.3	726.3	16000	**C614_726.3 S1 M1SC6**	150	**C614_726.3 P71 BN71A6**	151
1.3	1248	0.8	717.7	10000	**C514_717.7 S1 M1SC6**	146	**C514_717.7 P71 BN71A6**	147
1.5	1049	1.0	884.9	10000			**C514_884.9 P63 BN63B4**	147
1.6	958	1.0	808.0	10000			**C514_808.0 P63 BN63B4**	147
1.6	955	1.0	549.7	10000	**C514_549.7 S1 M1SC6**	146	**C514_549.7 P71 BN71A6**	147
1.8	861	1.9	726.3	16000			**C614_726.3 P63 BN63B4**	151
1.8	851	1.2	717.7	10000			**C514_717.7 P63 BN63B4**	147
1.9	806	1.2	463.9	10000	**C514_463.9 S1 M1SC6**	146	**C514_463.9 P71 BN71A6**	147
1.9	803	2.0	462.0	16000	**C614_462.0 S1 M1SC6**	150	**C614_462.0 P71 BN71A6**	151
2.0	796	0.8	671.3	7000	**C414_671.3 S05 M05B4**	142	**C414_671.3 P63 BN63B4**	143
2.0	783	0.8	450.2	7000	**C414_450.2 S1 M1SC6**	142	**C414_450.2 P71 BN71A6**	143
2.0	777	1.3	655.4	10000			**C514_655.4 P63 BN63B4**	147
2.2	727	0.8	418.5	7000	**C414_418.5 S1 M1SC6**	142	**C414_418.5 P71 BN71A6**	143
2.2	723	1.4	415.7	10000	**C514_415.7 S1 M1SC6**	146	**C514_415.7 P71 BN71A6**	147
2.2	706	0.8	595.8	7000	**C414_595.8 S05 M05B4**	142	**C414_595.8 P63 BN63B4**	143
2.4	660	1.5	379.6	10000	**C514_379.6 S1 M1SC6**	146	**C514_379.6 P71 BN71A6**	147
2.4	644	0.9	543.5	7000	**C414_543.5 S05 M05B4**	142	**C414_543.5 P63 BN63B4**	143
2.6	587	0.8	341.7	6300	**C364_341.7 S1 M1SC6**	138	**C364_341.7 P71 BN71A6**	139
2.7	585	1.0	493.5	7000	**C414_493.5 S05 M05B4**	142	**C414_493.5 P63 BN63B4**	143
2.9	534	1.1	450.2	7000	**C414_450.2 S05 M05B4**	142	**C414_450.2 P63 BN63B4**	143
2.9	536	0.8	458.4	6500	**C364_458.4 S05 M05B4**	138	**C364_458.4 P63 BN63B4**	139
3.1	492	0.9	420.2	6500	**C364_420.2 S05 M05B4**	138	**C364_420.2 P63 BN63B4**	139
3.2	496	1.2	418.5	7000	**C414_418.5 S05 M05B4**	142	**C414_418.5 P63 BN63B4**	143
3.5	452	1.3	381.8	7000	**C414_381.8 S05 M05B4**	142	**C414_381.8 P63 BN63B4**	143
3.5	442	1.0	377.9	6500	**C364_377.9 S05 M05B4**	138	**C364_377.9 P63 BN63B4**	139
3.9	400	1.1	341.7	6500	**C364_341.7 S05 M05B4**	138	**C364_341.7 P63 BN63B4**	139
4.0	395	1.5	333.4	7000	**C414_333.4 S05 M05B4**	142	**C414_333.4 P63 BN63B4**	143
4.1	373	1.2	318.9	6500	**C364_318.9 S05 M05B4**	138	**C364_318.9 P63 BN63B4**	139
4.3	371	1.6	209.1	7000	**C413_209.1 S1 M1SC6**	142	**C413_209.1 P71 BN71A6**	143
4.3	360	1.7	304.2	7000	**C414_304.2 S05 M05B4**	142	**C414_304.2 P63 BN63B4**	143
4.5	340	1.3	290.9	6500	**C364_290.9 S05 M05B4**	138	**C364_290.9 P63 BN63B4**	139
4.7	339	1.8	190.8	7000	**C413_190.8 S1 M1SC6**	142	**C413_190.8 P71 BN71A6**	143
4.8	330	0.9	186.0	5500	**C323_186.0 S1 M1SC6**	134	**C323_186.0 P71 BN71A6**	135
5.0	312	1.9	263.0	7000	**C414_263.0 S05 M05B4**	142	**C414_263.0 P63 BN63B4**	143
5.2	298	1.5	255.0	6500	**C364_255.0 S05 M05B4**	138	**C364_255.0 P63 BN63B4**	139
5.4	297	1.0	167.4	5500	**C323_167.4 S1 M1SC6**	134	**C323_167.4 P71 BN71A6**	135
5.4	295	0.9	244.2	5500	**C323_244.2 S05 M05B4**	134	**C323_244.2 P63 BN63B4**	135
5.7	270	1.7	230.9	6500	**C364_230.9 S05 M05B4**	138	**C364_230.9 P63 BN63B4**	139
6.1	261	1.2	215.6	5500	**C323_215.6 S05 M05B4**	134	**C323_215.6 P63 BN63B4**	135
6.4	250	1.8	206.4	6500	**C363_206.4 S05 M05B4**	138	**C363_206.4 P63 BN63B4**	139
7.1	225	1.3	186.0	5500	**C323_186.0 S05 M05B4**	134	**C323_186.0 P63 BN63B4**	135
7.2	222	2.0	183.5	6500	**C363_183.5 S05 M05B4**	138	**C363_183.5 P63 BN63B4**	139
7.4	216	0.9	178.5	5000	**C223_178.5 S05 M05B4**	130	**C223_178.5 P63 BN63B4**	131
7.9	202	1.5	167.4	5500	**C323_167.4 S05 M05B4**	134	**C323_167.4 P63 BN63B4**	135

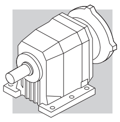

0.18 kW

nn_2 min⁻¹	M_2 Nm	S	i	R_{n2} N	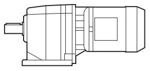		IEC	
8.1	196	2.3	162.0	6500	**C363_162.0 S05 M05B4**	138	**C363_162.0 P63 BN63B4**	139
8.7	183	1.1	151.7	5000	**C223_151.7 S05 M05B4**	130	**C223_151.7 P63 BN63B4**	131
8.9	179	1.7	148.4	5500	**C323_148.4 S05 M05B4**	134	**C323_148.4 P63 BN63B4**	135
9.4	169	2.7	139.8	6500	**C363_139.8 S05 M05B4**	138	**C363_139.8 P63 BN63B4**	139
9.7	165	1.2	136.5	5000	**C223_136.5 S05 M05B4**	130	**C223_136.5 P63 BN63B4**	131
9.7	164	1.8	136.0	5500	**C323_136.0 S05 M05B4**	134	**C323_136.0 P63 BN63B4**	135
10.5	152	3.0	125.8	6500	**C363_125.8 S05 M05B4**	138	**C363_125.8 P63 BN63B4**	139
10.8	148	2.0	122.4	5500	**C323_122.4 S05 M05B4**	134	**C323_122.4 P63 BN63B4**	135
10.8	148	1.4	122.2	5000	**C223_122.2 S05 M05B4**	130	**C223_122.2 P63 BN63B4**	131
11.8	135	1.5	112.0	5000	**C223_112.0 S05 M05B4**	130	**C223_112.0 P63 BN63B4**	131
11.8	135	3.3	111.5	6500	**C363_111.5 S05 M05B4**	138	**C363_111.5 P63 BN63B4**	139
11.9	134	2.2	110.6	5500	**C323_110.6 S05 M05B4**	134	**C323_110.6 P63 BN63B4**	135
12.8	125	2.4	103.3	5500	**C323_103.3 S05 M05B4**	134	**C323_103.3 P63 BN63B4**	135
12.9	124	3.6	102.2	6500	**C363_102.2 S05 M05B4**	138	**C363_102.2 P63 BN63B4**	139
13.2	121	1.7	100.2	5000	**C223_100.2 S05 M05B4**	130	**C223_100.2 P63 BN63B4**	131
14.0	114	2.6	94.2	5500	**C323_94.2 S05 M05B4**	134	**C323_94.2 P63 BN63B4**	135
14.9	107	1.9	88.5	5000	**C223_88.5 S05 M05B4**	130	**C223_88.5 P63 BN63B4**	131
16.0	100	2.0	82.6	5000	**C223_82.6 S05 M05B4**	130	**C223_82.6 P63 BN63B4**	131
16.0	100	3.0	82.6	5500	**C323_82.6 S05 M05B4**	134	**C323_82.6 P63 BN63B4**	135
17.6	90	2.2	74.8	5000	**C223_74.8 S05 M05B4**	130	**C223_74.8 P63 BN63B4**	131
17.7	90	3.2	74.7	5500	**C323_74.7 S05 M05B4**	134	**C323_74.7 P63 BN63B4**	135
19.8	83	2.6	66.8	5500	**C322_66.8 S05 M05B4**	134	**C322_66.8 P63 BN63B4**	135
20.0	82	1.1	66.2	2000	**C122_66.2 S05 M05B4**	126	**C122_66.2 P63 BN63B4**	127
20.2	79	2.5	65.3	5000	**C223_65.3 S05 M05B4**	130	**C223_65.3 P63 BN63B4**	131
20.9	78	1.7	63.3	5000	**C222_63.3 S05 M05B4**	130	**C222_63.3 P63 BN63B4**	131
22.0	73	2.6	60.0	5000	**C223_60.0 S05 M05B4**	130	**C223_60.0 P63 BN63B4**	131
22.2	73	2.9	59.4	5500	**C322_59.4 S05 M05B4**	134	**C322_59.4 P63 BN63B4**	135
23.9	68	1.3	55.2	2000	**C122_55.2 S05 M05B4**	126	**C122_55.2 P63 BN63B4**	127
24.1	68	2.3	54.7	5000	**C222_54.7 S05 M05B4**	130	**C222_54.7 P63 BN63B4**	131
27.1	60	2.6	48.6	5000	**C222_48.6 S05 M05B4**	130	**C222_48.6 P63 BN63B4**	131
27.7	59	1.5	47.6	2000	**C122_47.6 S05 M05B4**	126	**C122_47.6 P63 BN63B4**	127
31	53	3.6	43.3	5000	**C222_43.3 S05 M05B4**	130	**C222_43.3 P63 BN63B4**	131
31	52	1.7	42.3	2000	**C122_42.3 S05 M05B4**	126	**C122_42.3 P63 BN63B4**	127
33	50	0.9	40.3	850	**C052_40.3 S05 M05B4**	125		
36	45	1.0	36.4	850	**C052_36.4 S05 M05B4**	125		
36	46	2.0	37.0	2000	**C122_37.0 S05 M05B4**	126	**C122_37.0 P63 BN63B4**	127
40	40	2.2	32.8	2000	**C122_32.8 S05 M05B4**	126	**C122_32.8 P63 BN63B4**	127
40	41	1.1	32.8	840	**C052_32.8 S05 M05B4**	125		
45	36	2.5	29.5	2000	**C122_29.5 S05 M05B4**	126	**C122_29.5 P63 BN63B4**	127
49	34	1.3	27.1	820	**C052_27.1 S05 M05B4**	125		
52	31	2.8	25.4	2000	**C122_25.4 S05 M05B4**	126	**C122_25.4 P63 BN63B4**	127
57	29	3.0	23.2	2000	**C122_23.2 S05 M05B4**	126	**C122_23.2 P63 BN63B4**	127
63	26	1.7	21.0	810	**C052_21.0 S05 M05B4**	125		
64	25	3.2	20.6	2000	**C122_20.6 S05 M05B4**	126	**C122_20.6 P63 BN63B4**	127
70	23	1.7	18.9	790	**C052_18.9 S05 M05B4**	125		
72	23	3.4	18.4	2000	**C122_18.4 S05 M05B4**	126	**C122_18.4 P63 BN63B4**	127

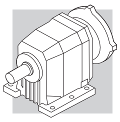

0.18 kW

n_2 min⁻¹	M_2 Nm	S	i	R_{n2} N			IEC	
77	21	3.6	17.2	2000	**C122_17.2 S05 M05B4**	126	**C122_17.2 P63 BN63B4**	127
85	19	2.1	15.6	760	**C052_15.6 S05 M05B4**	125		
106	15	2.6	12.5	740	**C052_12.5 S05 M05B4**	125		
118	14	2.9	11.2	720	**C052_11.2 S05 M05B4**	125		
142	11	2.6	9.3	690	**C052_9.3 S05 M05B4**	125		
178	9	3.3	7.4	650	**C052_7.4 S05 M05B4**	125		
197	8	3.6	6.7	640	**C052_6.7 S05 M05B4**	125		
229	7	7.4	11.9	1670	**C122_11.9 S05 M05A2**	126	**C122_11.9 P63 BN63A2**	127
240	7	4.4	5.5	600	**C052_5.5 S05 M05B4**	125		
268	6	8.1	10.1	1600	**C122_10.1 S05 M05A2**	126	**C122_10.1 P63 BN63A2**	127
310	5	8.9	8.8	1530	**C122_8.8 S05 M05A2**	126	**C122_8.8 P63 BN63A2**	127
354	5	9.8	7.6	1470	**C122_7.6 S05 M05A2**	126	**C122_7.6 P63 BN63A2**	127
440	4	11.3	6.2	1390	**C122_6.2 S05 M05A2**	126	**C122_6.2 P63 BN63A2**	127
488	3	11.9	5.6	1300	**C122_5.6 S05 M05A2**	126	**C122_5.6 P63 BN63A2**	127
577	3	13.4	4.9	1250	**C122_4.9 S05 M05A2**	126	**C122_4.9 P63 BN63A2**	127
635	3	14.0	4.3	1190	**C122_4.3 S05 M05A2**	126	**C122_4.3 P63 BN63A2**	127
770	2	16.0	3.7	1140	**C122_3.7 S05 M05A2**	126	**C122_3.7 P63 BN63A2**	127
853	2	16.7	3.2	1090	**C122_3.2 S05 M05A2**	126	**C122_3.2 P63 BN63A2**	127
1015	2	18.7	2.8	1040	**C122_2.8 S05 M05A2**	126	**C122_2.8 P63 BN63A2**	127

0.25 kW

n_2 min⁻¹	M_2 Nm	S	i	R_{n2} N			IEC	
0.61	3575	1.1	1481	35000			**C804_1481 P71 BN71B6**	158
0.77	2820	1.4	1168	35000			**C804_1168 P71 BN71B6**	158
1.2	1753	0.9	726.3	16000	**C614_726.3 S1 M1SD6**	150	**C614_726.3 P71 BN71B6**	151
1.6	1330	0.8	808.0	10000			**C514_808.0 P63 BN63C4**	147
1.6	1327	0.8	549.7	10000	**C514_549.7 S1 M1SD6**	146	**C514_549.7 P71 BN71B6**	147
1.9	1134	0.9	717.7	10000			**C514_717.7 P71 BN71A4**	147
1.9	1120	0.9	463.9	10000	**C514_463.9 S1 M1SD6**	146	**C514_463.9 P71 BN71B6**	147
2.0	1101	1.5	668.8	16000			**C614_668.8 P63 BN63C4**	151
2.4	894	1.8	370.1	16000	**C614_370.1 S1 M1SD6**	150	**C614_370.1 P71 BN71B6**	151
2.5	869	1.2	549.7	10000			**C514_549.7 P71 BN71A4**	147
2.9	741	0.8	450.2	7000	**C414_450.2 S05 M05C4**	142	**C414_450.2 P71 BN71A4**	143
3.2	689	0.9	418.5	7000	**C414_418.5 S05 M05C4**	142	**C414_418.5 P71 BN71A4**	143
3.2	684	1.5	415.7	10000			**C514_415.7 P71 BN71A4**	147
3.5	628	1.0	381.8	7000	**C414_381.8 S05 M05C4**	142	**C414_381.8 P71 BN71A4**	143
3.5	625	1.6	379.6	10000			**C514_379.6 P71 BN71A4**	147
3.8	567	0.8	344.3	6500	**C364_344.3 S05 M05C4**	138	**C364_344.3 P71 BN71A4**	139
4.0	549	1.1	333.4	7000	**C414_333.4 S05 M05C4**	142	**C414_333.4 P71 BN71A4**	143
4.0	537	1.9	326.1	10000			**C514_326.1 P71 BN71A4**	147
4.2	511	0.9	318.9	6500	**C364_318.9 S05 M05C4**	138	**C364_318.9 P71 BN71A4**	139
4.3	501	1.2	304.2	7000	**C414_304.2 S05 M05C4**	142	**C414_304.2 P71 BN71A4**	143
4.4	490	2.0	297.8	10000			**C514_297.8 P71 BN71A4**	147
4.6	466	1.0	290.9	6500	**C364_290.9 S05 M05C4**	138	**C364_290.9 P71 BN71A4**	139

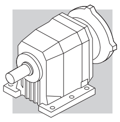

0.25 kW

n2 min-1	M2 Nm	S	i	Rn2 N	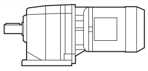		IEC	
5.0	434	2.3	263.8	10000			**C514_263.8 P71 BN71A4**	147
5.0	433	1.4	263.0	7000	**C414_263.0 S05 M05C4**	142	**C414_263.0 P71 BN71A4**	143
5.3	409	1.1	255.0	6500	**C364_255.0 S05 M05C4**	138	**C364_255.0 P71 BN71A4**	139
5.5	395	1.5	239.9	7000	**C414_239.9 S05 M05C4**	142	**C414_239.9 P71 BN71A4**	143
5.8	370	1.2	230.9	6500	**C364_230.9 S05 M05C4**	138	**C364_230.9 P71 BN71A4**	139
6.3	350	2.9	216.7	10000			**C513_216.7 P71 BN71A4**	147
6.5	342	1.3	206.4	6500	**C363_206.4 S05 M05C4**	138	**C363_206.4 P71 BN71A4**	139
7.2	308	1.9	190.8	7000			**C413_190.8 P71 BN71A4**	143
7.2	308	1.0	186.0	5500	**C323_186.0 S05 M05C4**	134	**C323_186.0 P71 BN71A4**	135
7.3	304	1.5	183.5	6500	**C363_183.5 S05 M05C4**	138	**C363_183.5 P71 BN71A4**	139
8.0	277	1.1	167.4	5500	**C323_167.4 S05 M05C4**	134	**C323_167.4 P71 BN71A4**	135
8.3	268	1.7	162.0	6500	**C363_162.0 S05 M05C4**	138	**C363_162.0 P71 BN71A4**	139
8.4	265	2.3	164.1	7000			**C413_164.1 P71 BN71A4**	143
9.0	246	1.2	148.4	5500	**C323_148.4 S05 M05C4**	134	**C323_148.4 P71 BN71A4**	135
9.6	231	1.9	139.8	6500	**C363_139.8 S05 M05C4**	138	**C363_139.8 P71 BN71A4**	139
9.8	226	0.9	136.5	5000	**C223_136.5 S05 M05C4**	130	**C223_136.5 P71 BN71A4**	131
9.9	225	1.3	136.0	5500	**C323_136.0 S05 M05C4**	134	**C323_136.0 P71 BN71A4**	135
10.3	215	2.8	132.9	7000			**C413_132.9 P71 BN71A4**	143
10.7	208	2.2	125.8	6500	**C363_125.8 S05 M05C4**	138	**C363_125.8 P71 BN71A4**	139
11.0	203	1.5	122.4	5500	**C323_122.4 S05 M05C4**	134	**C323_122.4 P71 BN71A4**	135
11.0	202	1.0	122.2	5000	**C223_122.2 S05 M05C4**	130	**C223_122.2 P71 BN71A4**	131
12.0	185	1.1	112.0	5000	**C223_112.0 S05 M05C4**	130	**C223_112.0 P71 BN71A4**	131
12.0	185	2.4	111.5	6500	**C363_111.5 S05 M05C4**	138	**C363_111.5 P71 BN71A4**	139
12.1	183	1.6	110.6	5500	**C323_110.6 S05 M05C4**	134	**C323_110.6 P71 BN71A4**	135
13.0	171	1.8	103.3	5500	**C323_103.3 S05 M05C4**	134	**C323_103.3 P71 BN71A4**	135
13.1	169	2.7	102.2	6500	**C363_102.2 S05 M05C4**	138	**C363_102.2 P71 BN71A4**	139
13.4	166	1.2	100.2	5000	**C223_100.2 S05 M05C4**	130	**C223_100.2 P71 BN71A4**	131
14.2	156	1.9	94.2	5500	**C323_94.2 S05 M05C4**	134	**C323_94.2 P71 BN71A4**	135
14.6	152	3.0	91.9	6500	**C363_91.9 S05 M05C4**	138	**C363_91.9 P71 BN71A4**	139
15.1	147	1.4	88.5	5000	**C223_88.5 S05 M05C4**	130	**C223_88.5 P71 BN71A4**	131
16.2	137	1.5	82.6	5000	**C223_82.6 S05 M05C4**	130	**C223_82.6 P71 BN71A4**	131
16.2	137	2.2	82.6	5500	**C323_82.6 S05 M05C4**	134	**C323_82.6 P71 BN71A4**	135
17.9	124	1.6	74.8	5000	**C223_74.8 S05 M05C4**	130	**C223_74.8 P71 BN71A4**	131
17.9	124	2.3	74.7	5500	**C323_74.7 S05 M05C4**	134	**C323_74.7 P71 BN71A4**	135
20.1	113	1.9	66.8	5500	**C322_66.8 S05 M05C4**	134	**C322_66.8 P71 BN71A4**	135
20.3	112	0.8	66.2	2000	**C122_66.2 S05 M05C4**	126	**C122_66.2 P71 BN71A4**	127
20.5	108	1.8	65.3	5000	**C223_65.3 S05 M05C4**	130	**C223_65.3 P71 BN71A4**	131
21.2	107	1.2	63.3	5000	**C222_63.3 S05 M05C4**	130	**C222_63.3 P71 BN71A4**	131
22.3	99	1.9	60.0	5000	**C223_60.0 S05 M05C4**	130	**C223_60.0 P71 BN71A4**	131
22.6	100	2.1	59.4	5500	**C322_59.4 S05 M05C4**	134	**C322_59.4 P71 BN71A4**	135
24.3	93	1.0	55.2	2000	**C122_55.2 S05 M05C4**	126	**C122_55.2 P71 BN71A4**	127
24.5	93	1.7	54.7	5000	**C222_54.7 S05 M05C4**	130	**C222_54.7 P71 BN71A4**	131
25.6	89	3.4	52.4	5500	**C322_52.4 S05 M05C4**	134	**C322_52.4 P71 BN71A4**	135
27.5	82	1.9	48.6	5000	**C222_48.6 S05 M05C4**	130	**C222_48.6 P71 BN71A4**	131
28.1	80	1.1	47.6	2000	**C122_47.6 S05 M05C4**	126	**C122_47.6 P71 BN71A4**	127
31	73	2.6	43.3	4750	**C222_43.3 S05 M05C4**	130	**C222_43.3 P71 BN71A4**	131
32	72	1.3	42.3	2000	**C122_42.3 S05 M05C4**	126	**C122_42.3 P71 BN71A4**	127
36	63	1.4	37.0	2000	**C122_37.0 S05 M05C4**	126	**C122_37.0 P71 BN71A4**	127

0.25 kW

n_2 min^{-1}	M_2 Nm	S	i	R_{n2} N	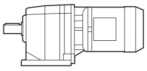		IEC	
36	62	3.2	36.8	4540	**C222_36.8 S05 M05C4**	130	**C222_36.8 P71 BN71A4**	131
40	56	3.6	33.1	4500	**C222_33.1 S05 M05C4**	130	**C222_33.1 P71 BN71A4**	131
41	55	1.6	32.8	2000	**C122_32.8 S05 M05C4**	126	**C122_32.8 P71 BN71A4**	127
45	50	1.8	29.5	2000	**C122_29.5 S05 M05C4**	126	**C122_29.5 P71 BN71A4**	127
49	47	1.0	27.1	700	**C052_27.1 S05 M05C4**	125		
53	43	2.1	25.4	2000	**C122_25.4 S05 M05C4**	126	**C122_25.4 P71 BN71A4**	127
58	39	2.2	23.2	2000	**C122_23.2 S05 M05C4**	126	**C122_23.2 P71 BN71A4**	127
63	36	1.2	21.0	720	**C052_21.0 S05 M05C4**	125		
65	35	2.4	20.6	2000	**C122_20.6 S05 M05C4**	126	**C122_20.6 P71 BN71A4**	127
70	33	1.2	18.9	710	**C052_18.9 S05 M05C4**	125		
73	31	2.5	18.4	2000	**C122_18.4 S05 M05C4**	126	**C122_18.4 P71 BN71A4**	127
78	29	2.6	17.2	2000	**C122_17.2 S05 M05C4**	126	**C122_17.2 P71 BN71A4**	127
85	27	1.5	15.6	700	**C052_15.6 S05 M05C4**	125		
87	26	2.8	15.4	2000	**C122_15.4 S05 M05C4**	126	**C122_15.4 P71 BN71A4**	127
100	23	3.1	13.4	2000	**C122_13.4 S05 M05C4**	126	**C122_13.4 P71 BN71A4**	127
106	22	1.9	12.5	690	**C052_12.5 S05 M05C4**	125		
113	20	3.3	11.9	2000	**C122_11.9 S05 M05C4**	126	**C122_11.9 P71 BN71A4**	127
118	19	2.1	11.2	670	**C052_11.2 S05 M05C4**	125		
133	17	3.7	10.1	1980	**C122_10.1 S05 M05C4**	126	**C122_10.1 P71 BN71A4**	127
142	16	1.9	9.3	650	**C052_9.3 S05 M05C4**	125		
157	14	4.2	17.2	1870	**C122_17.2 S05 M05B2**	126	**C122_17.2 P63 BN63B2**	127
178	13	2.4	7.4	620	**C052_7.4 S05 M05C4**	125		
197	12	2.6	6.7	610	**C052_6.7 S05 M05C4**	125		
204	11	5.0	13.4	1710	**C122_13.4 S05 M05B2**	126	**C122_13.4 P63 BN63B2**	127
230	10	5.4	11.9	1660	**C122_11.9 S05 M05B2**	126	**C122_11.9 P63 BN63B2**	127
240	9	3.2	5.5	580	**C052_5.5 S05 M05C4**	125		
268	8	5.8	10.1	1590	**C122_10.1 S05 M05B2**	126	**C122_10.1 P63 BN63B2**	127
311	7	6.5	8.8	1510	**C122_8.8 S05 M05B2**	126	**C122_8.8 P63 BN63B2**	127
354	6	7.0	7.6	1460	**C122_7.6 S05 M05B2**	126	**C122_7.6 P63 BN63B2**	127
442	5	8.2	6.2	1350	**C122_6.2 S05 M05B2**	126	**C122_6.2 P63 BN63B2**	127
489	5	8.6	5.6	1290	**C122_5.6 S05 M05B2**	126	**C122_5.6 P63 BN63B2**	127
577	4	9.7	4.9	1240	**C122_4.9 S05 M05B2**	126	**C122_4.9 P63 BN63B2**	127
637	4	10.1	4.3	1180	**C122_4.3 S05 M05B2**	126	**C122_4.3 P63 BN63B2**	127
770	3	11.5	3.7	1130	**C122_3.7 S05 M05B2**	126	**C122_3.7 P63 BN63B2**	127
856	3	12.1	3.2	1080	**C122_3.2 S05 M05B2**	126	**C122_3.2 P63 BN63B2**	127
979	2	13.0	2.8	1030	**C122_2.8 S05 M05B2**	126	**C122_2.8 P63 BN63B2**	127

0.37 kW

n_2 min^{-1}	M_2 Nm	S	i	R_{n2} N	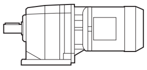		IEC	
0.73	4382	1.6	1240	60000	**C904_1240 S1 M1LA6**	160	**C904_1240 P80 BN80A6**	161
0.78	4127	1.0	1168	35000			**C804_1168 P80 BN80A6**	158
0.93	3476	1.2	1481	35000			**C804_1481 P71 BN71B4**	158
1.2	2741	1.5	1168	35000			**C804_1168 P71 BN71B4**	158
1.4	2220	1.8	945.7	35000			**C804_945.7 P71 BN71B4**	158
1.5	2165	1.1	922.6	25000			**C704_922.6 P71 BN71B4**	155

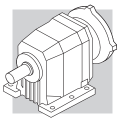

0.37 kW

n_2 min^{-1}	M_2 Nm	S	i	R_{n2} N	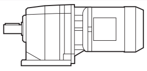			
1.7	1869	0.9	796.1	16000	**C614_796.1 S1 M1SD4**	150	**C614_796.1 P71 BN71B4**	151
2.0	1570	1.0	668.8	16000	**C614_668.8 S1 M1SD4**	150	**C614_668.8 P71 BN71B4**	151
2.1	1543	1.5	657.3	25000			**C704_657.3 P71 BN71B4**	155
2.4	1341	1.2	571.2	16000	**C614_571.2 S1 M1SD4**	150	**C614_571.2 P71 BN71B4**	151
2.5	1302	1.8	554.7	25000			**C704_554.7 P71 BN71B4**	155
2.5	1290	0.8	549.7	10000	**C514_549.7 S1 M1SD4**	146	**C514_549.7 P71 BN71B4**	147
2.6	1223	1.3	521.1	16000	**C614_521.1 S1 M1SD4**	150	**C614_521.1 P71 BN71B4**	151
3.3	989	1.6	421.5	16000	**C614_421.5 S1 M1SD4**	150	**C614_421.5 P71 BN71B4**	151
3.3	976	1.0	415.7	10000	**C514_415.7 S1 M1SD4**	146	**C514_415.7 P71 BN71B4**	147
3.3	961	2.4	409.4	25000			**C704_409.4 P71 BN71B4**	155
3.6	891	1.1	379.6	10000	**C514_379.6 S1 M1SD4**	146	**C514_379.6 P71 BN71B4**	147
3.7	869	1.8	370.1	16000	**C614_370.1 S1 M1SD4**	150	**C614_370.1 P71 BN71B4**	151
4.1	793	2.0	337.7	16000	**C614_337.7 S1 M1SD4**	150	**C614_337.7 P71 BN71B4**	151
4.1	783	0.8	333.4	7000	**C414_333.4 S1 M1SD4**	142	**C414_333.4 P71 BN71B4**	143
4.2	765	1.3	326.1	10000	**C514_326.1 S1 M1SD4**	146	**C514_326.1 P71 BN71B4**	147
4.6	699	1.4	297.8	10000	**C514_297.8 S1 M1SD4**	146	**C514_297.8 P71 BN71B4**	147
5.2	619	1.6	263.8	10000	**C514_263.8 S1 M1SD4**	146	**C514_263.8 P71 BN71B4**	147
5.2	617	1.0	263.0	7000	**C414_263.0 S1 M1SD4**	142	**C414_263.0 P71 BN71B4**	143
5.9	540	0.8	230.9	6300	**C364_230.9 S1 M1SD4**	138	**C364_230.9 P71 BN71B4**	139
6.3	520	1.9	216.7	10000	**C513_216.7 S1 M1SD4**	146	**C513_216.7 P71 BN71B4**	147
6.6	502	1.2	209.1	7000	**C413_209.1 S1 M1SD4**	142	**C413_209.1 P71 BN71B4**	143
6.6	499	0.9	206.4	6500			**C363_206.4 P71 BN71B4**	139
6.9	475	2.1	197.9	10000	**C513_197.9 S1 M1SD4**	146	**C513_197.9 P71 BN71B4**	147
7.2	458	1.3	190.8	7000	**C413_190.8 S1 M1SD4**	142	**C413_190.8 P71 BN71B4**	143
7.5	444	1.0	183.5	6500			**C363_183.5 P71 BN71B4**	139
7.6	431	1.4	179.9	7000	**C413_179.9 S1 M1SD4**	142	**C413_179.9 P71 BN71B4**	143
7.8	422	2.4	175.8	10000	**C513_175.8 S1 M1SD4**	146	**C513_175.8 P71 BN71B4**	147
8.3	394	1.5	164.1	7000	**C413_164.1 S1 M1SD4**	142	**C413_164.1 P71 BN71B4**	143
8.5	385	2.6	160.5	10000	**C513_160.5 S1 M1SD4**	146	**C513_160.5 P71 BN71B4**	147
8.5	392	1.1	162.0	6500	**C363_162.0 S1 M1SD4**	138	**C363_162.0 P71 BN71B4**	139
9.4	349	1.7	145.6	7000	**C413_145.6 S1 M1SD4**	142	**C413_145.6 P71 BN71B4**	143
9.8	338	1.3	139.8	6500	**C363_139.8 S1 M1SD4**	138	**C363_139.8 P71 BN71B4**	139
10.1	329	0.9	136.0	5500	**C323_136.0 S1 M1SD4**	134	**C323_136.0 P71 BN71B4**	135
10.3	319	1.9	132.9	7000	**C413_132.9 S1 M1SD4**	142	**C413_132.9 P71 BN71B4**	143
10.9	304	1.5	125.8	6500	**C363_125.8 S1 M1SD4**	138	**C363_125.8 P71 BN71B4**	139
11.2	296	1.0	122.4	5500	**C323_122.4 S1 M1SD4**	134	**C323_122.4 P71 BN71B4**	135
11.4	289	2.1	120.6	7000	**C413_120.6 S1 M1SD4**	142	**C413_120.6 P71 BN71B4**	143
12.3	270	1.7	111.5	6500	**C363_111.5 S1 M1SD4**	138	**C363_111.5 P71 BN71B4**	139
12.4	264	2.3	110.1	7000	**C413_110.1 S1 M1SD4**	142	**C413_110.1 P71 BN71B4**	143
12.4	267	1.1	110.6	5500	**C323_110.6 S1 M1SD4**	134	**C323_110.6 P71 BN71B4**	135
13.3	250	1.2	103.3	5500	**C323_103.3 S1 M1SD4**	134	**C323_103.3 P71 BN71B4**	135
13.4	245	2.4	102.3	7000	**C413_102.3 S1 M1SD4**	142	**C413_102.3 P71 BN71B4**	143
13.4	247	1.8	102.2	6500	**C363_102.2 S1 M1SD4**	138	**C363_102.2 P71 BN71B4**	139
14.5	228	1.3	94.2	5500	**C323_94.2 S1 M1SD4**	134	**C323_94.2 P71 BN71B4**	135
14.7	224	2.7	93.3	7000	**C413_93.3 S1 M1SD4**	142	**C413_93.3 P71 BN71B4**	143
14.9	222	2.0	91.9	6500	**C363_91.9 S1 M1SD4**	138	**C363_91.9 P71 BN71B4**	139
15.5	214	0.9	88.5	4850	**C223_88.5 S1 M1SD4**	130	**C223_88.5 P71 BN71B4**	131
16.5	201	2.2	83.1	6500	**C363_83.1 S1 M1SD4**	138	**C363_83.1 P71 BN71B4**	139
16.6	200	1.0	82.6	5000	**C223_82.6 S1 M1SD4**	130	**C223_82.6 P71 BN71B4**	131
16.6	200	1.5	82.6	5500	**C323_82.6 S1 M1SD4**	134	**C323_82.6 P71 BN71B4**	135
16.8	196	3.1	81.5	7000	**C413_81.5 S1 M1SD4**	142	**C413_81.5 P71 BN71B4**	143

0.37 kW

n_2 min^{-1}	M_2 Nm	S	i	R_{n2} N			IEC	
17.7	188	2.4	77.6	6500	**C363_77.6 S1 M1SD4**	138	**C363_77.6 P71 BN71B4**	139
18.3	181	1.1	74.8	5000	**C223_74.8 S1 M1SD4**	130	**C223_74.8 P71 BN71B4**	131
18.3	181	1.6	74.7	5500	**C323_74.7 S1 M1SD4**	134	**C323_74.7 P71 BN71B4**	135
18.4	178	3.4	74.4	7000	**C413_74.4 S1 M1SD4**	142	**C413_74.4 P71 BN71B4**	143
19.4	171	2.6	70.8	6500	**C363_70.8 S1 M1SD4**	138	**C363_70.8 P71 BN71B4**	139
20.5	165	1.3	66.8	5500			**C322_66.8 P71 BN71B4**	135
21.0	158	1.3	65.3	5000	**C223_65.3 S1 M1SD4**	130	**C223_65.3 P71 BN71B4**	131
21.7	156	0.8	63.3	4850			**C222_63.3 P71 BN71B4**	131
22.1	150	3.0	62.0	6500	**C363_62.0 S1 M1SD4**	138	**C363_62.0 P71 BN71B4**	139
22.8	145	1.3	60.0	5000	**C223_60.0 S1 M1SD4**	130	**C223_60.0 P71 BN71B4**	131
23.1	147	1.5	59.4	5500	**C322_59.4 S1 M1SD4**	134	**C322_59.4 P71 BN71B4**	135
25.0	135	1.1	54.7	5000			**C222_54.7 P71 BN71B4**	131
26.1	130	2.3	52.4	5500	**C322_52.4 S1 M1SD4**	134	**C322_52.4 P71 BN71B4**	135
28.2	120	1.3	48.6	4850		130	**C222_48.6 P71 BN71B4**	131
30	112	2.7	45.3	5500	**C322_45.3 S1 M1SD4**	134	**C322_45.3 P71 BN71B4**	135
32	107	1.8	43.3	4530	**C222_43.3 S1 M1SD4**	130	**C222_43.3 P71 BN71B4**	131
34	101	3.0	40.7	5500	**C322_40.7 S1 M1SD4**	134	**C322_40.7 P71 BN71B4**	135
37	91	1.0	37.0	2000	**C122_37.0 S1 M1SD4**	126	**C122_37.0 P71 BN71B4**	127
37	91	2.2	36.8	4360	**C222_36.8 S1 M1SD4**	130	**C222_36.8 P71 BN71B4**	131
38	89	3.4	36.1	5500	**C322_36.1 S1 M1SD4**	134	**C322_36.1 P71 BN71B4**	135
41	82	2.4	33.1	4240	**C222_33.1 S1 M1SD4**	130	**C222_33.1 P71 BN71B4**	131
42	81	1.1	32.8	2000	**C122_32.8 S1 M1SD4**	126	**C122_32.8 P71 BN71B4**	127
46	73	2.7	29.6	4130	**C222_29.6 S1 M1SD4**	130	**C222_29.6 P71 BN71B4**	131
46	73	1.2	29.5	2000	**C122_29.5 S1 M1SD4**	126	**C122_29.5 P71 BN71B4**	127
50	67	3.0	27.2	4100	**C222_27.2 S1 M1SD4**	130	**C222_27.2 P71 BN71B4**	131
54	63	1.4	25.4	2000	**C122_25.4 S1 M1SD4**	126	**C122_25.4 P71 BN71B4**	127
56	60	3.3	24.3	3920	**C222_24.3 S1 M1SD4**	130	**C222_24.3 P71 BN71B4**	131
59	57	1.5	23.2	2000	**C122_23.2 S1 M1SD4**	126	**C122_23.2 P71 BN71B4**	127
66	51	1.6	20.6	2000	**C122_20.6 S1 M1SD4**	126	**C122_20.6 P71 BN71B4**	127
74	45	1.7	18.4	2000	**C122_18.4 S1 M1SD4**	126	**C122_18.4 P71 BN71B4**	127
80	42	1.8	17.2	2000	**C122_17.2 S1 M1SD4**	126	**C122_17.2 P71 BN71B4**	127
88	39	1.0	15.6	580	**C052_15.6 S1 M1SD4**	125		
89	38	1.9	15.4	2000	**C122_15.4 S1 M1SD4**	126	**C122_15.4 P71 BN71B4**	127
102	33	2.1	13.4	2000	**C122_13.4 S1 M1SD4**	126	**C122_13.4 P71 BN71B4**	127
110	31	1.3	12.5	600	**C052_12.5 S1 M1SD4**	125		
115	29	2.3	11.9	2000	**C122_11.9 S1 M1SD4**	126	**C122_11.9 P71 BN71B4**	127
122	28	1.4	11.2	590	**C052_11.2 S1 M1SD4**	125		
136	25	2.5	10.1	1930	**C122_10.1 S1 M1SD4**	126	**C122_10.1 P71 BN71B4**	127
147	23	1.3	9.3	580	**C052_9.3 S1 M1SD4**	125		
155	22	2.7	8.8	1850	**C122_8.8 S1 M1SD4**	126	**C122_8.8 P71 BN71B4**	127
164	20	2.2	5.5	570	**C052_5.5 S1 M1LA6**	125		
180	19	3.0	7.6	1780	**C122_7.6 S1 M1SD4**	126	**C122_7.6 P71 BN71B4**	127
185	18	1.6	7.4	570	**C052_7.4 S1 M1SD4**	125		
204	17	1.8	6.7	560	**C052_6.7 S1 M1SD4**	125		
220	15	3.4	6.2	1650	**C122_6.2 S1 M1SD4**	126	**C122_6.2 P71 BN71B4**	127
235	14	3.7	11.9	1610	**C122_11.9 S05 M05C2**	126	**C122_11.9 P71 BN71A2**	127
249	14	2.2	5.5	540	**C052_5.5 S1 M1SD4**	125		
273	12	4.0	10.1	1570	**C122_10.1 S05 M05C2**	126	**C122_10.1 P71 BN71A2**	127
318	11	4.5	8.8	1500	**C122_8.8 S05 M05C2**	126	**C122_8.8 P71 BN71A2**	127
361	9	4.8	7.6	1440	**C122_7.6 S05 M05C2**	126	**C122_7.6 P71 BN71A2**	127
452	7	5.7	6.2	1350	**C122_6.2 S05 M05C2**	126	**C122_6.2 P71 BN71A2**	127

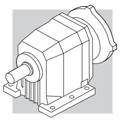

0.37 kW

n2 min-1	M2 Nm	S	i	Rn2 N			IEC	
500	7	6.0	5.6	1290	**C122_5.6 S05 M05C2**	126	**C122_5.6 P71 BN71A2**	127
577	6	6.5	4.9	1230	**C122_4.9 S05 M05C2**	126	**C122_4.9 P71 BN71A2**	127
651	5	7.0	4.3	1180	**C122_3.2 S05 M05C2**	126	**C122_3.2 P71 BN71A2**	127
770	4	7.8	3.7	1120	**C122_3.7 S05 M05C2**	126	**C122_3.7 P71 BN71A2**	127
875	4	8.4	3.2	1080	**C122_3.2 S05 M05C2**	126	**C122_3.2 P71 BN71A2**	127
1015	3	9.1	2.8	1030	**C122_2.8 S05 M05C2**	126	**C122_2.8 P71 BN71A2**	127

0.55 kW

n2 min-1	M2 Nm	S	i	Rn2 N			IEC	
0.74	6442	1.1	1240	60000	**C904_1240 S2 M2SA6**	160	**C904_1240 P80 BN80B6**	161
0.85	5616	2.1	1081	85000	**C1004_1081 S2 M2SA6**	163	**C1004_1081 P80 BN80B6**	164
1.0	4792	1.5	922.3	60000	**C904_922.3 S2 M2SA6**	160	**C904_922.3 P80 BN80B6**	161
1.1	4381	0.9	1274	35000	**C804_1274 S1 M1LA4**	157	**C804_1274 P80 BN80A4**	158
1.1	4295	1.7	1240	60000	**C904_1240 S1 M1LA4**	160	**C904_1240 P80 BN80A4**	161
1.3	3549	1.1	1032	35000	**C804_1032 S1 M1LA4**	157	**C804_1032 P80 BN80A4**	158
1.4	3484	2.1	1006	60000	**C904_1006 S1 M1LA4**	160	**C904_1006 P80 BN80A4**	161
1.6	2939	1.4	854.6	35000	**C804_854.6 S1 M1LA4**	157	**C804_854.6 P80 BN80A4**	158
1.6	2923	2.5	844.0	65000	**C904_844.0 S1 M1LA4**	160	**C904_844.0 P80 BN80A4**	161
1.9	2531	0.9	736.0	25000	**C704_736.0 S1 M1LA4**	154	**C704_736.0 P80 BN80A4**	155
1.9	2492	1.6	724.7	35000	**C804_724.7 S1 M1LA4**	157	**C804_724.7 P80 BN80A4**	158
2.1	2284	1.8	664.3	35000	**C804_664.3 S1 M1LA4**	157	**C804_664.3 P80 BN80A4**	158
2.1	2260	1.0	657.3	25000	**C704_657.3 S1 M1LA4**	154	**C704_657.3 P80 BN80A4**	155
2.4	1978	0.8	571.2	16000	**C614_571.2 S1 M1LA4**	150	**C614_571.2 P80 BN80A4**	151
2.5	1907	1.2	554.7	25000	**C704_554.7 S1 M1LA4**	154	**C704_554.7 P80 BN80A4**	155
2.6	1820	2.2	529.3	35000	**C804_529.3 S1 M1LA4**	157	**C804_529.3 P80 BN80A4**	158
3.0	1600	1.0	462.0	16000	**C614_462.0 S1 M1LA4**	150	**C614_462.0 P80 BN80A4**	151
3.1	1566	2.6	455.4	35000	**C804_455.4 S1 M1LA4**	157	**C804_455.4 P80 BN80A4**	158
3.1	1525	1.5	443.5	25000	**C704_443.5 S1 M1LA4**	154	**C704_443.5 P80 BN80A4**	155
3.3	1460	1.1	421.5	16000	**C614_421.5 S1 M1LA4**	150	**C614_421.5 P80 BN80A4**	151
3.6	1315	0.8	379.6	10000	**C514_379.6 S1 M1LA4**	146	**C514_379.6 P80 BN80A4**	147
3.7	1282	1.2	370.1	16000	**C614_370.1 S1 M1LA4**	150	**C614_370.1 P80 BN80A4**	151
3.8	1254	3.2	364.7	35000	**C804_364.7 S1 M1LA4**	157	**C804_364.7 P80 BN80A4**	158
4.0	1184	1.9	344.3	25000	**C704_344.3 S1 M1LA4**	154	**C704_344.3 P80 BN80A4**	155
4.1	1170	1.4	337.7	16000	**C614_337.7 S1 M1LA4**	150	**C614_337.7 P80 BN80A4**	151
4.2	1130	0.9	326.1	10000	**C514_326.1 S1 M1LA4**	146	**C514_326.1 P80 BN80A4**	147
4.6	1031	1.0	297.8	10000	**C514_297.8 S1 M1LA4**	146	**C514_297.8 P80 BN80A4**	147
5.0	953	1.7	275.3	16000	**C614_275.3 S1 M1LA4**	150	**C614_275.3 P80 BN80A4**	151
5.1	936	2.5	272.2	25000	**C704_272.2 S1 M1LA4**	154	**C704_272.2 P80 BN80A4**	155
5.2	914	1.1	263.8	10000	**C514_263.8 S1 M1LA4**	146	**C514_263.8 P80 BN80A4**	147
5.7	834	1.2	240.9	10000	**C514_240.9 S1 M1LA4**	146	**C514_240.9 P80 BN80A4**	147
5.8	847	2.7	239.3	25000			**C703_239.3 P80 BN80A4**	155
5.8	825	1.9	238.3	16000	**C614_238.3 S1 M1LA4**	150	**C614_238.3 P80 BN80A4**	151
6.2	782	2.9	220.9	25000			**C703_220.9 P80 BN80A4**	155
6.3	753	2.1	217.4	16000	**C614_217.4 S1 M1LA4**	150	**C614_217.4 P80 BN80A4**	151
6.4	767	1.3	216.7	10000	**C513_216.7 S1 M1LA4**	146	**C513_216.7 P80 BN80A4**	147
7.0	700	1.4	197.9	10000	**C513_197.9 S1 M1LA4**	146	**C513_197.9 P80 BN80A4**	147
7.0	693	2.3	195.8	16000			**C613_195.8 P80 BN80A4**	151

0.55 kW

n2 min-1	M2 Nm	S	i	Rn2 N	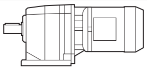		IEC	
7.1	687	3.3	194.1	25000			**C703_194.1 P80 BN80A4**	155
7.7	637	0.9	179.9	7000	**C413_179.9 S1 M1LA4**	142	**C413_179.9 P80 BN80A4**	143
7.7	632	2.5	178.6	16000			**C613_178.6 P80 BN80A4**	151
7.9	622	1.6	175.8	10000	**C513_175.8 S1 M1LA4**	146	**C513_175.8 P80 BN80A4**	147
8.4	582	2.7	164.5	16000			**C613_164.5 P80 BN80A4**	151
8.4	581	1.0	164.1	7000	**C413_164.1 S1 M1LA4**	142	**C413_164.1 P80 BN80A4**	143
8.6	568	1.8	160.5	10000	**C513_160.5 S1 M1LA4**	146	**C513_160.5 P80 BN80A4**	147
9.2	531	3.0	150.0	16000			**C613_150.0 P80 BN80A4**	151
9.4	522	1.9	147.4	10000	**C513_147.4 S1 M1LA4**	146	**C513_147.4 P80 BN80A4**	147
9.5	516	1.2	145.6	7000	**C413_145.6 S1 M1LA4**	142	**C413_145.6 P80 BN80A4**	143
9.8	497	3.2	140.5	16000			**C613_140.5 P80 BN80A4**	151
9.9	494	0.9	139.8	6500	**C363_139.8 S1 M1LA4**	138	**C363_139.8 P80 BN80A4**	139
10.3	477	2.1	134.6	10000	**C513_134.6 S1 M1LA4**	146	**C513_134.6 P80 BN80A4**	147
10.4	470	1.3	132.9	7000	**C413_132.9 S1 M1LA4**	142	**C413_132.9 P80 BN80A4**	143
11.0	445	1.0	125.8	6500	**C363_125.8 S1 M1LA4**	138	**C363_125.8 P80 BN80A4**	139
11.1	440	2.3	124.4	10000	**C513_124.4 S1 M1LA4**	146	**C513_124.4 P80 BN80A4**	147
11.4	427	1.4	120.6	7000	**C413_120.6 S1 M1LA4**	142	**C413_120.6 P80 BN80A4**	143
12.1	402	2.5	113.6	10000	**C513_113.6 S1 M1LA4**	146	**C513_113.6 P80 BN80A4**	147
12.4	394	1.1	111.5	6500	**C363_111.5 S1 M1LA4**	138	**C363_111.5 P80 BN80A4**	139
12.5	390	1.5	110.1	7000	**C413_110.1 S1 M1LA4**	142	**C413_110.1 P80 BN80A4**	143
13.5	362	1.7	102.3	7000	**C413_102.3 S1 M1LA4**	142	**C413_102.3 P80 BN80A4**	143
13.5	361	1.2	102.2	6500	**C363_102.2 S1 M1LA4**	138	**C363_102.2 P80 BN80A4**	139
13.6	360	2.8	101.8	10000	**C513_101.8 S1 M1LA4**	146	**C513_101.8 P80 BN80A4**	147
14.7	333	0.9	94.2	5500	**C323_94.2 S1 M1LA4**	134	**C323_94.2 P80 BN80A4**	135
14.8	330	1.8	93.3	7000	**C413_93.3 S1 M1LA4**	142	**C413_93.3 P80 BN80A4**	143
14.8	329	3.0	93.0	10000	**C513_93.0 S1 M1LA4**	146	**C513_93.0 P80 BN80A4**	147
15.0	325	1.4	91.9	6500	**C363_91.9 S1 M1LA4**	138	**C363_91.9 P80 BN80A4**	139
16.6	294	1.5	83.1	6500	**C363_83.1 S1 M1LA4**	138	**C363_83.1 P80 BN80A4**	139
16.7	292	1.0	82.6	5500	**C323_82.6 S1 M1LA4**	134	**C323_82.6 P80 BN80A4**	135
16.9	289	2.1	81.5	7000	**C413_81.5 S1 M1LA4**	142	**C413_81.5 P80 BN80A4**	143
17.5	284	1.1	52.4	5500	**C322_52.4 S2 M2SA6**	134	**C322_52.4 P80 BN80B6**	135
17.8	274	1.6	77.6	6500	**C363_77.6 S1 M1LA4**	138	**C363_77.6 P80 BN80A4**	139
18.5	264	1.1	74.7	5500	**C323_74.7 S1 M1LA4**	134	**C323_74.7 P80 BN80A4**	135
18.6	263	2.3	74.4	7000	**C413_74.4 S1 M1LA4**	142	**C413_74.4 P80 BN80A4**	143
19.5	250	1.8	70.8	6500	**C363_70.8 S1 M1LA4**	138	**C363_70.8 P80 BN80A4**	139
20.7	241	0.9	66.8	5500			**C322_66.8 P80 BN80A4**	135
21.5	228	2.6	64.3	7000	**C413_64.3 S1 M1LA4**	142	**C413_64.3 P80 BN80A4**	143
22.2	219	2.1	62.0	6500	**C363_62.0 S1 M1LA4**	138	**C363_62.0 P80 BN80A4**	139
22.6	221	1.4	40.7	5500	**C322_40.7 S2 M2SA6**	134	**C322_40.7 P80 BN80B6**	135
23.0	212	0.9	60.0	4280	**C223_60.0 S1 M1LA4**	130	**C223_60.0 P80 BN80A4**	131
23.2	214	1.0	59.4	5500	**C322_59.4 S1 M1LA4**	134	**C322_59.4 P80 BN80A4**	135
23.5	208	2.9	58.7	7000	**C413_58.7 S1 M1LA4**	142	**C413_58.7 P80 BN80A4**	143
24.6	198	2.3	56.2	6500	**C363_56.2 S1 M1LA4**	138	**C363_56.2 P80 BN80A4**	139
26.3	189	1.6	52.4	5500	**C322_52.4 S1 M1LA4**	134	**C322_52.4 P80 BN80A4**	135
26.8	182	3.3	51.5	7000	**C413_51.5 S1 M1LA4**	142	**C413_51.5 P80 BN80A4**	143
27.8	180	1.1	33.1	4270	**C222_33.1 S2 M2SA6**	130	**C222_33.1 P80 BN80B6**	131
28.7	170	2.6	48.2	6500	**C363_48.2 S1 M1LA4**	138	**C363_48.2 P80 BN80A4**	139
30	163	1.8	45.3	5500	**C322_45.3 S1 M1LA4**	134	**C322_45.3 P80 BN80A4**	135
31	162	3.1	44.8	7000	**C412_44.8 S1 M1LA4**	142	**C412_44.8 P80 BN80A4**	143
32	154	2.9	43.5	6500	**C363_43.5 S1 M1LA4**	138	**C363_43.5 P80 BN80A4**	139
32	156	1.2	43.3	4190	**C222_43.3 S1 M1LA4**	130	**C222_43.3 P80 BN80A4**	131

0.55 kW

n_2 min⁻¹	M_2 Nm	S	i	R_{n2} N			IEC	
34	147	2.0	40.7	5500	**C322_40.7 S1 M1LA4**	134	**C322_40.7 P80 BN80A4**	135
36	135	3.3	38.1	6500	**C363_38.1 S1 M1LA4**	138	**C363_38.1 P80 BN80A4**	139
38	133	1.5	36.8	4070	**C222_36.8 S1 M1LA4**	130	**C222_36.8 P80 BN80A4**	131
38	130	2.3	36.1	5500	**C322_36.1 S1 M1LA4**	134	**C322_36.1 P80 BN80A4**	135
42	119	1.7	33.1	3970	**C222_33.1 S1 M1LA4**	130	**C222_33.1 P80 BN80A4**	131
42	119	2.5	33.1	5500	**C322_33.1 S1 M1LA4**	134	**C322_33.1 P80 BN80A4**	135
46	107	2.8	29.8	5500	**C322_29.8 S1 M1LA4**	134	**C322_29.8 P80 BN80A4**	135
47	107	1.9	29.6	3890	**C222_29.6 S1 M1LA4**	130	**C222_29.6 P80 BN80A4**	131
47	106	0.8	29.5	1820	**C122_29.5 S1 M1LA4**	126	**C122_29.5 P80 BN80A4**	127
51	98	2.0	27.2	3860	**C222_27.2 S1 M1LA4**	130	**C222_27.2 P80 BN80A4**	131
51	97	3.1	26.9	5500	**C322_26.9 S1 M1LA4**	134	**C322_26.9 P80 BN80A4**	135
54	92	1.0	25.4	2000	**C122_25.4 S1 M1LA4**	126	**C122_25.4 P80 BN80A4**	127
55	91	3.3	25.1	5500	**C322_25.1 S1 M1LA4**	134	**C322_25.1 P80 BN80A4**	135
57	88	2.3	24.3	3720	**C222_24.3 S1 M1LA4**	130	**C222_24.3 P80 BN80A4**	131
59	84	1.0	23.2	2000	**C122_23.2 S1 M1LA4**	126	**C122_23.2 P80 BN80A4**	127
64	77	2.5	21.5	3700	**C222_21.5 S1 M1LA4**	130	**C222_21.5 P80 BN80A4**	131
67	74	1.1	20.6	2000	**C122_20.6 S1 M1LA4**	126	**C122_20.6 P80 BN80A4**	127
69	72	2.6	20.0	3560	**C222_20.0 S1 M1LA4**	130	**C222_20.0 P80 BN80A4**	131
75	66	1.2	18.4	2000	**C122_18.4 S1 M1LA4**	126	**C122_18.4 P80 BN80A4**	127
76	65	2.8	18.1	3500	**C222_18.1 S1 M1LA4**	130	**C222_18.1 P80 BN80A4**	131
80	62	1.2	17.2	2000	**C122_17.2 S1 M1LA4**	126	**C122_17.2 P80 BN80A4**	127
87	57	3.1	15.8	3350	**C222_15.8 S1 M1LA4**	130	**C222_15.8 P80 BN80A4**	131
89	56	1.3	15.4	2000	**C122_15.4 S1 M1LA4**	126	**C122_15.4 P80 BN80A4**	127
95	53	3.2	14.5	3300	**C222_14.5 S1 M1LA4**	130	**C222_14.5 P80 BN80A4**	131
103	48	1.4	13.4	1990	**C122_13.4 S1 M1LA4**	126	**C122_13.4 P80 BN80A4**	127
116	43	1.6	11.9	1920	**C122_11.9 S1 M1LA4**	126	**C122_11.9 P80 BN80A4**	127
121	41	1.6	7.6	1910	**C122_7.6 S2 M2SA6**	126	**C122_7.6 P80 BN80B6**	127
123	40	1.0	11.2	480	**C052_11.2 S1 M1LA4**	125		
137	36	1.7	10.1	1850	**C122_10.1 S1 M1LA4**	126	**C122_10.1 P80 BN80A4**	127
151	33	3.3	6.1	2860	**C222_6.1 S2 M2SA6**	130	**C222_6.1 P80 BN80B6**	131
156	32	1.9	8.8	1780	**C122_8.8 S1 M1LA4**	126	**C122_8.8 P80 BN80A4**	127
181	28	2.0	7.6	1720	**C122_7.6 S1 M1LA4**	126	**C122_7.6 P80 BN80A4**	127
186	27	1.1	7.4	460	**C052_7.4 S1 M1LA4**	125		
206	24	1.2	6.7	450	**C052_6.7 S1 M1LA4**	125		
221	22	2.4	6.2	1590	**C122_6.2 S1 M1LA4**	126	**C122_6.2 P80 BN80A4**	127
237	21	2.5	11.9	1580	**C122_11.9 S1 M1SD2**	126	**C122_11.9 P71 BN71B2**	127
246	20	2.5	5.6	1540	**C122_5.6 S1 M1LA4**	126	**C122_5.6 P80 BN80A4**	127
251	20	1.5	5.5	430	**C052_5.5 S1 M1LA4**	125		
279	18	2.7	10.1	1530	**C122_10.1 S1 M1SD2**	126	**C122_10.1 P71 BN71B2**	127
283	18	2.7	4.9	1490	**C122_4.9 S1 M1LA4**	126	**C122_4.9 P80 BN80A4**	127
320	16	3.0	8.8	1470	**C122_8.8 S1 M1SD2**	126	**C122_8.8 P71 BN71B2**	127
320	16	2.9	4.3	1420	**C122_4.3 S1 M1LA4**	126	**C122_4.3 P80 BN80A4**	127
369	14	3.3	7.6	1410	**C122_7.6 S1 M1SD2**	126	**C122_7.6 P71 BN71B2**	127
378	13	3.2	3.7	1370	**C122_3.7 S1 M1LA4**	126	**C122_3.7 P80 BN80A4**	127
451	11	3.8	6.2	1300	**C122_6.2 S1 M1SD2**	126	**C122_6.2 P71 BN71B2**	127
504	10	4.0	5.6	1260	**C122_5.6 S1 M1SD2**	126	**C122_5.6 P71 BN71B2**	127
577	9	4.4	4.9	1210	**C122_4.9 S1 M1SD2**	126	**C122_4.9 P71 BN71B2**	127
656	8	4.7	4.3	1170	**C122_4.3 S1 M1SD2**	126	**C122_4.3 P71 BN71B2**	127
770	6	5.2	3.7	1110	**C122_3.7 S1 M1SD2**	126	**C122_3.7 P71 BN71B2**	127
881	6	5.7	3.2	990	**C122_3.2 S1 M1SD2**	126	**C122_3.2 P71 BN71B2**	127
1007	5	6.1	2.8	950	**C122_2.8 S1 M1SD2**	126	**C122_2.8 P71 BN71B2**	127

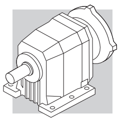

0.75 kW

n_2 min-1	M_2 Nm	S	i	R_{n2} N	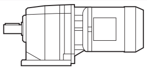		IEC	
0.85	7659	1.6	1081	85000	**C1004_1081 S2 M2SB6**	163	**C1004_1081 P90 BN90S6**	164
0.91	7127	1.0	1006	60000	**C904_1006 S2 M2SB6**	160	**C904_1006 P90 BN90S6**	161
1.1	5773	1.2	1240	35000	**C904_1240 S2 M2SA4**	160	**C904_1240 P80 BN80B4**	161
1.5	4403	0.9	945.7	35000	**C804_945.7 S2 M2SA4**	157	**C804_945.7 P80 BN80B4**	158
1.5	4294	1.7	922.3	60000	**C904_922.3 S2 M2SA4**	160	**C904_922.3 P80 BN80B4**	161
1.8	3647	1.1	783.4	35000	**C804_783.4 S2 M2SA4**	157	**C804_783.4 P80 BN80B4**	158
1.8	3602	2.0	773.6	60000	**C904_773.6 S2 M2SA4**	160	**C904_773.6 P80 BN80B4**	161
2.1	3093	1.3	664.3	35000	**C804_664.3 S2 M2SA4**	157	**C804_664.3 P80 BN80B4**	158
2.1	3039	2.4	652.8	60000	**C904_652.8 S2 M2SA4**	160	**C904_652.8 P80 BN80B4**	161
2.6	2487	2.9	534.2	60000	**C904_534.2 S2 M2SA4**	160	**C904_534.2 P80 BN80B4**	161
2.6	2464	1.6	529.3	35000	**C804_529.3 S2 M2SA4**	157	**C804_529.3 P80 BN80B4**	158
3.1	2128	3.4	457.1	60000	**C904_457.1 S2 M2SA4**	160	**C904_457.1 P80 BN80B4**	161
3.1	2120	1.9	455.4	35000	**C804_455.4 S2 M2SA4**	157	**C804_455.4 P80 BN80B4**	158
3.2	2065	1.1	443.5	25000	**C704_443.5 S2 M2SA4**	154	**C704_443.5 P80 BN80B4**	155
3.3	1962	0.8	421.5	16000	**C614_421.5 S2 M2SA4**	150	**C614_421.5 P80 BN80B4**	151
3.4	1906	1.2	409.4	25000	**C704_409.4 S2 M2SA4**	154	**C704_409.4 P80 BN80B4**	155
3.8	1723	0.9	370.1	16000	**C614_370.1 S2 M2SA4**	150	**C614_370.1 P80 BN80B4**	151
3.8	1733	1.3	239.3	25000	**C703_239.3 S2 M2SB6**	154	**C703_239.3 P90 BN90S6**	155
4.1	1572	1.0	337.7	16000	**C614_337.7 S2 M2SA4**	150	**C614_337.7 P80 BN80B4**	151
4.3	1563	2.6	215.8	35000	**C803_215.8 S2 M2SB6**	157	**C803_215.8 P90 BN90S6**	158
4.4	1480	1.6	317.9	25000	**C704_317.9 S2 M2SA4**	154	**C704_317.9 P80 BN80B4**	155
4.6	1405	1.1	301.7	16000	**C614_301.7 S2 M2SA4**	150	**C614_301.7 P80 BN80B4**	151
4.7	1417	1.1	195.8	16000	**C613_195.8 S2 M2SB6**	150	**C613_195.8 P90 BN90S6**	151
5.1	1282	1.2	275.3	16000	**C614_275.3 S2 M2SA4**	150	**C614_275.3 P80 BN80B4**	151
5.1	1267	1.8	272.2	25000	**C704_272.2 S2 M2SA4**	154	**C704_272.2 P80 BN80B4**	155
5.2	1293	1.2	178.6	16000	**C613_178.6 S2 M2SB6**	150	**C613_178.6 P90 BN90S6**	151
5.3	1228	0.8	263.8	10000	**C514_263.8 S2 M2SA4**	146	**C514_263.8 P80 BN80B4**	147
5.6	1191	1.3	164.5	16000	**C613_164.5 S2 M2SB6**	150	**C613_164.5 P90 BN90S6**	151
5.8	1121	0.9	240.9	10000	**C514_240.9 S2 M2SA4**	146	**C514_240.9 P80 BN80B4**	147
5.8	1139	2.0	239.3	25000	**C703_239.3 S2 M2SA4**	154	**C703_239.3 P80 BN80B4**	155
6.3	1051	2.1	220.9	25000	**C703_220.9 S2 M2SA4**	154	**C703_220.9 P80 BN80B4**	155
6.4	1012	1.6	217.4	16000	**C614_217.4 S2 M2SA4**	150	**C614_217.4 P80 BN80B4**	151
6.5	1031	1.0	216.7	10000	**C513_216.7 S2 M2SA4**	146	**C513_216.7 P80 BN80B4**	147
7.1	941	1.1	197.9	10000	**C513_197.9 S2 M2SA4**	146	**C513_197.9 P80 BN80B4**	147
7.2	931	1.7	195.8	16000	**C613_195.8 S2 M2SA4**	150	**C613_195.8 P80 BN80B4**	151
7.2	924	2.5	194.1	25000	**C703_194.1 S2 M2SA4**	154	**C703_194.1 P80 BN80B4**	155
7.8	850	1.9	178.6	16000	**C613_178.6 S2 M2SA4**	150	**C613_178.6 P80 BN80B4**	151
8.0	836	1.2	175.8	10000	**C513_175.8 S2 M2SA4**	146	**C513_175.8 P80 BN80B4**	147
8.5	782	2.0	164.5	16000	**C613_164.5 S2 M2SA4**	150	**C613_164.5 P80 BN80B4**	151
8.6	775	3.0	162.8	25000	**C703_162.8 S2 M2SA4**	154	**C703_162.8 P80 BN80B4**	155
8.7	764	1.3	160.5	10000	**C513_160.5 S2 M2SA4**	146	**C513_160.5 P80 BN80B4**	147
9.3	714	2.2	150.0	16000	**C613_150.0 S2 M2SA4**	150	**C613_150.0 P80 BN80B4**	151
9.5	702	1.4	147.4	10000	**C513_147.4 S2 M2SA4**	146	**C513_147.4 P80 BN80B4**	147
10.0	668	2.4	140.5	16000	**C613_140.5 S2 M2SA4**	150	**C613_140.5 P80 BN80B4**	151
10.2	654	3.5	137.4	25000	**C703_137.4 S2 M2SA4**	154	**C703_137.4 P80 BN80B4**	155
10.4	641	1.6	134.6	10000	**C513_134.6 S2 M2SA4**	146	**C513_134.6 P80 BN80B4**	147
10.5	632	0.9	132.9	7000	**C413_132.9 S2 M2SA4**	142	**C413_132.9 P80 BN80B4**	143
10.9	610	2.6	128.1	16000	**C613_128.1 S2 M2SA4**	150	**C613_128.1 P80 BN80B4**	151
11.3	592	1.7	124.4	10000	**C513_124.4 S2 M2SA4**	146	**C513_124.4 P80 BN80B4**	147
11.6	574	1.0	120.6	7000	**C413_120.6 S2 M2SA4**	142	**C413_120.6 P80 BN80B4**	143
12.3	541	3.0	113.6	16000	**C613_113.6 S2 M2SA4**	150	**C613_113.6 P80 BN80B4**	151

0.75 kW

n$_2$ min^{-1}	M$_2$ Nm	S	i	R$_{n2}$ N	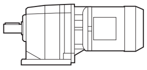			
12.3	541	1.9	113.6	10000	**C513_113.6 S2 M2SA4**	146	**C513_113.6 P80 BN80B4**	147
12.7	524	1.1	110.1	7000	**C413_110.1 S2 M2SA4**	142	**C413_110.1 P80 BN80B4**	143
13.5	493	3.2	103.6	16000	**C613_103.6 S2 M2SA4**	150	**C613_103.6 P80 BN80B4**	151
13.7	487	1.2	102.3	7000	**C413_102.3 S2 M2SA4**	142	**C413_102.3 P80 BN80B4**	143
13.7	485	0.9	102.2	6500	**C363_102.2 S2 M2SA4**	138	**C363_102.2 P80 BN80B4**	139
13.8	484	2.1	101.8	10000	**C513_101.8 S2 M2SA4**	146	**C513_101.8 P80 BN80B4**	147
15.0	444	1.4	93.3	7000	**C413_93.3 S2 M2SA4**	142	**C413_93.3 P80 BN80B4**	143
15.1	442	2.3	93.0	10000	**C513_93.0 S2 M2SA4**	146	**C513_93.0 P80 BN80B4**	147
15.2	436	1.0	91.9	6500	**C363_91.9 S2 M2SA4**	138	**C363_91.9 P80 BN80B4**	139
16.8	394	1.1	83.1	6500	**C363_83.1 S2 M2SA4**	138	**C363_83.1 P80 BN80B4**	139
17.2	388	1.5	81.5	7000	**C413_81.5 S2 M2SA4**	142	**C413_81.5 P80 BN80B4**	143
17.5	380	2.6	79.9	10000	**C513_79.9 S2 M2SA4**	146	**C513_79.9 P80 BN80B4**	147
18.0	368	1.2	77.6	6500	**C363_77.6 S2 M2SA4**	138	**C363_77.6 P80 BN80B4**	139
18.8	354	1.7	74.4	7000	**C413_74.4 S2 M2SA4**	142	**C413_74.4 P80 BN80B4**	143
19.2	347	2.9	72.9	10000	**C513_72.9 S2 M2SA4**	146	**C513_72.9 P80 BN80B4**	147
19.8	336	1.3	70.8	6500	**C363_70.8 S2 M2SA4**	138	**C363_70.8 P80 BN80B4**	139
21.7	307	3.3	64.6	10000	**C513_64.6 S2 M2SA4**	146	**C513_64.6 P80 BN80B4**	147
21.8	306	2.0	64.3	7000	**C413_64.3 S2 M2SA4**	142	**C413_64.3 P80 BN80B4**	143
22.6	294	1.5	62.0	6500	**C363_62.0 S2 M2SA4**	138	**C363_62.0 P80 BN80B4**	139
22.6	301	1.0	40.7	5500	**C322_40.7 S2 M2SB6**	134	**C322_40.7 P90 BN90S6**	135
23.9	279	2.1	58.7	7000	**C413_58.7 S2 M2SA4**	142	**C413_58.7 P80 BN80B4**	143
24.6	277	2.8	57.0	10000	**C512_57.0 S2 M2SA4**	146	**C512_57.0 P80 BN80B4**	147
24.9	266	1.7	56.2	6500	**C363_56.2 S2 M2SA4**	138	**C363_56.2 P80 BN80B4**	139
26.7	254	1.2	52.4	5500	**C322_52.4 S2 M2SA4**	134	**C322_52.4 P80 BN80B4**	135
27.2	245	2.4	51.5	7000	**C413_51.5 S2 M2SA4**	142	**C413_51.5 P80 BN80B4**	143
27.2	250	2.8	51.4	10000	**C512_51.4 S2 M2SA4**	146	**C512_51.4 P80 BN80B4**	147
29.1	228	2.0	48.2	6500	**C363_48.2 S2 M2SA4**	138	**C363_48.2 P80 BN80B4**	139
29.3	232	3.4	47.8	10000	**C512_47.8 S2 M2SA4**	146	**C512_47.8 P80 BN80B4**	147
30	223	2.7	47.0	7000	**C413_47.0 S2 M2SA4**	142	**C413_47.0 P80 BN80B4**	143
31	218	2.3	44.8	7000	**C412_44.8 S2 M2SA4**	142	**C412_44.8 P80 BN80B4**	143
31	219	1.4	45.3	5500	**C322_45.3 S2 M2SA4**	134	**C322_45.3 P80 BN80B4**	135
32	206	2.2	43.5	6500	**C363_43.5 S2 M2SA4**	138	**C363_43.5 P80 BN80B4**	139
32	210	0.9	43.3	3810	**C222_43.3 S2 M2SA4**	130	**C222_43.3 P80 BN80B4**	131
34	197	1.5	40.7	5500	**C322_40.7 S2 M2SA4**	134	**C322_40.7 P80 BN80B4**	135
35	192	3.1	40.3	7000	**C413_40.3 S2 M2SA4**	142	**C413_40.3 P80 BN80B4**	143
37	181	2.5	38.1	6500	**C363_38.1 S2 M2SA4**	138	**C363_38.1 P80 BN80B4**	139
38	180	2.8	37.1	7000	**C412_37.1 S2 M2SA4**	142	**C412_37.1 P80 BN80B4**	143
38	178	1.1	36.8	3750	**C222_36.8 S2 M2SA4**	130	**C222_36.8 P80 BN80B4**	131
39	175	1.7	36.1	5500	**C322_36.1 S2 M2SA4**	134	**C322_36.1 P80 BN80B4**	135
40	164	2.7	34.6	6500	**C363_34.6 S2 M2SA4**	138	**C363_34.6 P80 BN80B4**	139
42	160	1.2	33.1	3680	**C222_33.1 S2 M2SA4**	130	**C222_33.1 P80 BN80B4**	131
42	160	1.9	33.1	5500	**C322_33.1 S2 M2SA4**	134	**C322_33.1 P80 BN80B4**	135
47	144	2.1	29.8	5500	**C322_29.8 S2 M2SA4**	134	**C322_29.8 P80 BN80B4**	135
47	144	1.4	29.6	3630	**C222_29.6 S2 M2SA4**	130	**C222_29.6 P80 BN80B4**	131
49	136	3.3	28.7	6490	**C363_28.7 S2 M2SA4**	138	**C363_28.7 P80 BN80B4**	139
52	132	1.5	27.2	3600	**C222_27.2 S2 M2SA4**	130	**C222_27.2 P80 BN80B4**	131
52	130	2.3	26.9	5500	**C322_26.9 S2 M2SA4**	134	**C322_26.9 P80 BN80B4**	135
56	122	2.5	25.1	5460	**C322_25.1 S2 M2SA4**	134	**C322_25.1 P80 BN80B4**	135
58	118	1.7	24.3	3510	**C222_24.3 S2 M2SA4**	130	**C222_24.3 P80 BN80B4**	131
61	111	2.7	22.9	5300	**C322_22.9 S2 M2SA4**	134	**C322_22.9 P80 BN80B4**	135
65	104	1.9	21.5	3480	**C222_21.5 S2 M2SA4**	130	**C222_21.5 P80 BN80B4**	131

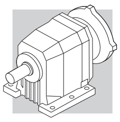

0.75 kW

n2 min-1	M2 Nm	S	i	Rn2 N			IEC	
70	97	3.0	20.1	5150	**C322_20.1 S2 M2SA4**	134	**C322_20.1 P80 BN80B4**	135
70	97	2.0	20.0	3380	**C222_20.0 S2 M2SA4**	130	**C222_20.0 P80 BN80B4**	131
77	88	2.1	18.1	3350	**C222_18.1 S2 M2SA4**	130	**C222_18.1 P80 BN80B4**	131
82	83	0.9	17.2	1750	**C122_17.2 S2 M2SA4**	126	**C122_17.2 P80 BN80B4**	127
88	77	2.3	15.8	3210	**C222_15.8 S2 M2SA4**	130	**C222_15.8 P80 BN80B4**	131
91	75	1.0	15.4	1920	**C122_15.4 S2 M2SA4**	126	**C122_15.4 P80 BN80B4**	127
96	70	2.4	14.5	3200	**C222_14.5 S2 M2SA4**	130	**C222_14.5 P80 BN80B4**	131
104	65	1.1	13.4	1870	**C122_13.4 S2 M2SA4**	126	**C122_13.4 P80 BN80B4**	127
113	60	2.7	12.4	3030	**C222_12.4 S2 M2SA4**	130	**C222_12.4 P80 BN80B4**	131
118	58	1.2	11.9	1780	**C122_11.9 S2 M2SA4**	126	**C122_11.9 P80 BN80B4**	127
126	54	2.9	11.1	2980	**C222_11.1 S2 M2SA4**	130	**C222_11.1 P80 BN80B4**	131
139	49	1.3	10.1	1760	**C122_10.1 S2 M2SA4**	126	**C122_10.1 P80 BN80B4**	127
145	47	3.1	9.6	2840	**C222_9.6 S2 M2SA4**	130	**C222_9.6 P80 BN80B4**	131
158	43	1.4	8.8	1700	**C122_8.8 S2 M2SA4**	126	**C122_8.8 P80 BN80B4**	127
162	42	3.3	8.7	2760	**C222_8.7 S2 M2SA4**	130	**C222_8.7 P80 BN80B4**	131
184	37	1.5	7.6	1650	**C122_7.6 S2 M2SA4**	126	**C122_7.6 P80 BN80B4**	127
225	30	1.8	6.2	1530	**C122_6.2 S2 M2SA4**	126	**C122_6.2 P80 BN80B4**	127
236	29	1.8	11.9	1520	**C122_11.9 S1 M1LA2**	126	**C122_11.9 P80 BN80A2**	127
250	27	1.9	5.6	1470	**C122_5.6 S2 M2SA4**	126	**C122_5.6 P80 BN80B4**	127
278	24	2.0	10.1	1490	**C122_10.1 S1 M1LA2**	126	**C122_10.1 P80 BN80A2**	127
288	24	2.0	4.9	1440	**C122_4.9 S2 M2SA4**	126	**C122_4.9 P80 BN80B4**	127
319	22	2.2	8.8	1420	**C122_8.8 S1 M1LA2**	126	**C122_8.8 P80 BN80A2**	127
325	21	2.2	4.3	1370	**C122_4.3 S2 M2SA4**	126	**C122_4.3 P80 BN80B4**	127
332	20	2.1	2.8	1390	**C122_2.8 S2 M2SB6**	126	**C122_2.8 P90 BN90S6**	127
367	19	2.4	7.6	1380	**C122_7.6 S1 M1LA2**	126	**C122_7.6 P80 BN80A2**	127
383	18	2.4	3.7	1330	**C122_3.7 S2 M2SA4**	126	**C122_3.7 P80 BN80B4**	127
436	16	2.6	3.2	1280	**C122_3.2 S2 M2SA4**	126	**C122_3.2 P80 BN80B4**	127
449	15	2.8	6.2	1280	**C122_6.2 S1 M1LA2**	126	**C122_6.2 P80 BN80A2**	127
506	13	2.8	2.8	1230	**C122_2.8 S2 M2SA4**	126	**C122_2.8 P80 BN80B4**	127
502	14	2.9	5.6	1240	**C122_5.6 S1 M1LA2**	126	**C122_5.6 P80 BN80A2**	127
575	12	3.2	4.9	1190	**C122_4.9 S1 M1LA2**	126	**C122_4.9 P80 BN80A2**	127
653	11	3.4	4.3	1050	**C122_4.3 S1 M1LA2**	126	**C122_4.3 P80 BN80A2**	127
767	9	3.8	3.7	1090	**C122_3.7 S1 M1LA2**	126	**C122_3.7 P80 BN80A2**	127
878	8	4.0	3.2	1050	**C122_3.2 S1 M1LA2**	126	**C122_3.2 P80 BN80A2**	127
1012	7	4.5	2.8	1010	**C122_2.8 S1 M1LA2**	126	**C122_2.8 P80 BN80A2**	127

1.1 kW

n2 min-1	M2 Nm	S	i	Rn2 N			IEC	
0.85	11232	1.1	1081	85000	**C1004_1081 S3 M3SA6**	163	**C1004_1081 P90 BN90L6**	164
1.0	9437	1.3	908.2	85000	**C1004_908.2 S3 M3SA6**	163	**C1004_908.2 P90 BN90L6**	164
1.2	7764	0.9	1137	60000	**C904_1137 S2 M2SB4**	160	**C904_1137 P90 BN90S4**	161
1.3	7381	1.6	1081	85000	**C1004_1081 S2 M2SB4**	163	**C1004_1081 P90 BN90S4**	164
1.4	6869	1.0	1006	60000	**C904_1006 S2 M2SB4**	160	**C904_1006 P90 BN90S4**	161
1.4	6856	1.8	1004	85000	**C1004_1004 S2 M2SB4**	163	**C1004_1004 P90 BN90S4**	164
1.7	5763	1.2	844.0	60000	**C904_844.0 S2 M2SB4**	160	**C904_844.0 P90 BN90S4**	161
1.7	5758	2.1	843.3	85000	**C1004_843.3 S2 M2SB4**	163	**C1004_843.3 P90 BN90S4**	164
2.1	4457	1.6	652.8	60000	**C904_652.8 S2 M2SB4**	160	**C904_652.8 P90 BN90S4**	161

1.1 kW

n_2 min^{-1}	M_2 Nm	S	i	R_{n2} N	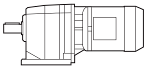	📄		📄
2.2	4284	2.8	627.4	85000	**C1004_627.4 S2 M2SB4**	163	**C1004_627.4 P90 BN90S4**	164
2.6	3648	2.0	534.2	60000	**C904_534.2 S2 M2SB4**	160	**C904_534.2 P90 BN90S4**	161
2.6	3614	1.1	529.3	35000	**C804_529.3 S2 M2SB4**	157	**C804_529.3 P90 BN90S4**	158
3.3	2861	2.5	419.0	60000	**C904_419.0 S2 M2SB4**	160	**C904_419.0 P90 BN90S4**	161
3.4	2851	1.4	417.5	35000	**C804_417.5 S2 M2SB4**	157	**C804_417.5 P90 BN90S4**	158
3.8	2490	1.6	364.7	35000	**C804_364.7 S2 M2SB4**	157	**C804_364.7 P90 BN90S4**	158
4.1	2351	1.0	344.3	25000	**C704_344.3 S2 M2SB4**	154	**C704_344.3 P90 BN90S4**	155
4.2	2283	1.8	334.3	35000	**C804_334.3 S2 M2SB4**	157	**C804_334.3 P90 BN90S4**	158
4.4	2171	1.1	317.9	25000	**C704_317.9 S2 M2SB4**	154	**C704_317.9 P90 BN90S4**	155
4.6	2060	0.8	301.7	16000	**C614_301.7 S2 M2SB4**	150	**C614_301.7 P90 BN90S4**	151
4.9	1951	2.1	285.7	35000	**C804_285.7 S2 M2SB4**	157	**C804_285.7 P90 BN90S4**	158
5.1	1880	0.9	275.3	16000	**C614_275.3 S2 M2SB4**	150	**C614_275.3 P90 BN90S4**	151
5.1	1859	1.2	272.2	25000	**C704_272.2 S2 M2SB4**	154	**C704_272.2 P90 BN90S4**	155
5.6	1716	1.3	251.3	25000	**C704_251.3 S2 M2SB4**	154	**C704_251.3 P90 BN90S4**	155
5.6	1746	0.9	164.5	16000	**C613_164.5 S3 M3SA6**	150	**C613_164.5 P90 BN90L6**	151
6.1	1593	1.0	150.0	16000	**C613_150.0 S3 M3SA6**	150	**C613_150.0 P90 BN90L6**	151
6.3	1542	1.5	220.9	25000	**C703_220.9 S2 M2SB4**	154	**C703_220.9 P90 BN90S4**	155
7.2	1366	1.2	195.8	16000	**C613_195.8 S2 M2SB4**	150	**C613_195.8 P90 BN90S4**	151
7.8	1250	1.8	179.2	25000	**C703_179.2 S2 M2SB4**	154	**C703_179.2 P90 BN90S4**	155
7.8	1246	1.3	178.6	16000	**C613_178.6 S2 M2SB4**	150	**C613_178.6 P90 BN90S4**	151
8.5	1148	1.4	164.5	16000	**C613_164.5 S2 M2SB4**	150	**C613_164.5 P90 BN90S4**	151
9.3	1049	2.2	150.3	25000	**C703_150.3 S2 M2SB4**	154	**C703_150.3 P90 BN90S4**	155
9.3	1047	1.5	150.0	16000	**C613_150.0 S2 M2SB4**	150	**C613_150.0 P90 BN90S4**	151
9.5	1029	1.0	147.4	10000	**C513_147.4 S2 M2SB4**	146	**C513_147.4 P90 BN90S4**	147
10.0	980	1.6	140.5	16000	**C613_140.5 S2 M2SB4**	150	**C613_140.5 P90 BN90S4**	151
10.4	939	1.1	134.6	10000	**C513_134.6 S2 M2SB4**	146	**C513_134.6 P90 BN90S4**	147
10.9	894	1.8	128.1	16000	**C613_128.1 S2 M2SB4**	150	**C613_128.1 P90 BN90S4**	151
11.0	885	2.6	126.8	25000	**C703_126.8 S2 M2SB4**	154	**C703_126.8 P90 BN90S4**	155
11.3	868	1.2	124.4	10000	**C513_124.4 S2 M2SB4**	146	**C513_124.4 P90 BN90S4**	147
12.3	793	2.0	113.6	16000	**C613_113.6 S2 M2SB4**	150	**C613_113.6 P90 BN90S4**	151
12.3	793	1.3	113.6	10000	**C513_113.6 S2 M2SB4**	146	**C513_113.6 P90 BN90S4**	147
12.5	785	2.9	112.4	25000	**C703_112.4 S2 M2SB4**	154	**C703_112.4 P90 BN90S4**	155
13.5	723	2.2	103.6	16000	**C613_103.6 S2 M2SB4**	150	**C613_103.6 P90 BN90S4**	151
13.8	710	1.4	101.8	10000	**C513_101.8 S2 M2SB4**	146	**C513_101.8 P90 BN90S4**	147
15.0	651	0.9	93.3	7000	**C413_93.3 S2 M2SB4**	142	**C413_93.3 P90 BN90S4**	143
15.1	649	1.5	93.0	10000	**C513_93.0 S2 M2SB4**	146	**C513_93.0 P90 BN90S4**	147
15.4	635	2.5	91.0	16000	**C613_91.0 S2 M2SB4**	150	**C613_91.0 P90 BN90S4**	151
16.9	579	2.8	83.0	16000	**C613_83.0 S2 M2SB4**	150	**C613_83.0 P90 BN90S4**	151
17.2	569	1.1	81.5	7000	**C413_81.5 S2 M2SB4**	142	**C413_81.5 P90 BN90S4**	143
17.5	557	1.8	79.9	10000	**C513_79.9 S2 M2SB4**	146	**C513_79.9 P90 BN90S4**	147
18.8	519	1.2	74.4	7000	**C413_74.4 S2 M2SB4**	142	**C413_74.4 P90 BN90S4**	143
18.9	518	3.1	74.2	16000	**C613_74.2 S2 M2SB4**	150	**C613_74.2 P90 BN90S4**	151
19.2	509	2.0	72.9	10000	**C513_72.9 S2 M2SB4**	146	**C513_72.9 P90 BN90S4**	147
19.8	494	0.9	70.8	6500	**C363_70.8 S2 M2SB4**	138	**C363_70.8 P90 BN90S4**	139
20.7	472	3.4	67.7	16000	**C613_67.7 S2 M2SB4**	150	**C613_67.7 P90 BN90S4**	151
21.7	451	2.2	64.6	10000	**C513_64.6 S2 M2SB4**	146	**C513_64.6 P90 BN90S4**	147
21.8	449	1.3	64.3	7000	**C413_64.3 S2 M2SB4**	142	**C413_64.3 P90 BN90S4**	143
22.6	433	1.0	62.0	6500	**C363_62.0 S2 M2SB4**	138	**C363_62.0 P90 BN90S4**	139
23.7	412	2.4	59.0	10000	**C513_59.0 S2 M2SB4**	146	**C513_59.0 P90 BN90S4**	147
23.9	409	1.5	58.7	7000	**C413_58.7 S2 M2SB4**	142	**C413_58.7 P90 BN90S4**	143
24.6	406	1.9	57.0	10000	**C512_57.0 S2 M2SB4**	146	**C512_57.0 P90 BN90S4**	147

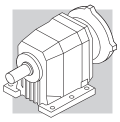

1.1 kW

n₂ min⁻¹	M₂ Nm	S	i	Rn2 N	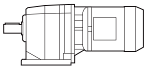		IEC	
24.9	392	1.1	56.2	6500	**C363_56.2 S2 M2SB4**	138	**C363_56.2 P90BN90S4**	139
27.2	359	1.7	51.5	7000	**C413_51.5 S2 M2SB4**	142	**C413_51.5 P90 BN90S4**	143
27.2	366	1.9	51.4	10000	**C512_51.4 S2 M2SB4**	146	**C512_51.4 P90 BN90S4**	147
27.4	357	2.8	51.2	10000	**C513_51.2 S2 M2SB4**	146	**C513_51.2 P90 BN90S4**	147
29.1	336	1.3	48.2	6500	**C363_48.2 S2 M2SB4**	138	**C363_48.2 P90 BN90S4**	139
29.3	341	2.3	47.8	10000	**C512_47.8 S2 M2SB4**	146	**C512_47.8 P90 BN90S4**	147
29.8	328	1.8	47.0	7000	**C413_47.0 S2 M2SB4**	142	**C413_47.0 P90 BN90S4**	143
30	326	3.1	46.7	10000	**C513_46.7 S2 M2SB4**	146	**C513_46.7 P90 BN90S4**	147
31	319	1.6	44.8	7000	**C412_44.8 S2 M2SB4**	142	**C412_44.8 P90 BN90S4**	143
31	322	0.9	45.3	5500	**C322_45.3 S2 M2SB4**	134	**C322_45.3 P90 BN90S4**	135
32	307	2.5	43.1	10000	**C512_43.1 S2 M2SB4**	146	**C512_43.1 P90 BN90S4**	147
32	303	1.5	43.5	6500	**C363_43.5 S2 M2SB4**	138	**C363_43.5 P90 BN90S4**	139
34	290	1.0	40.7	5500	**C322_40.7 S2 M2SB4**	134	**C322_40.7 P90 BN90S4**	135
35	288	2.8	40.4	10000	**C512_40.4 S2 M2SB4**	146	**C512_40.4 P90 BN90S4**	147
35	281	2.1	40.3	7000	**C413_40.3 S2 M2SB4**	142	**C413_40.3 P90 BN90S4**	143
37	266	1.7	38.1	6500	**C363_38.1 S2 M2SB4**	138	**C363_38.1 P90 BN90S4**	139
38	257	2.3	36.8	7000	**C413_36.8 S2 M2SB4**	142	**C413_36.8 P90 BN90S4**	143
38	264	1.9	37.1	7000	**C412_37.1 S2 M2SB4**	142	**C412_37.1 P90 BN90S4**	143
39	257	1.2	36.1	5500	**C322_36.1 S2 M2SB4**	134	**C322_36.1 P90 BN90S4**	135
40	241	1.9	34.6	6300	**C363_34.6 S2 M2SB4**	138	**C363_34.6 P90 BN90S4**	139
42	238	2.1	33.4	7000	**C412_33.4 S2 M2SB4**	142	**C412_33.4 P90 BN90S4**	143
42	236	1.3	33.1	5420	**C322_33.1 S2 M2SB4**	134	**C322_33.1 P90 BN90S4**	135
45	224	2.2	31.4	7000	**C412_31.4 S2 M2SB4**	142	**C412_31.4 P90 BN90S4**	143
45	218	2.6	31.2	7000	**C413_31.2 S2 M2SB4**	142	**C413_31.2 P90 BN90S4**	143
47	212	1.4	29.8	5360	**C322_29.8 S2 M2SB4**	134	**C322_29.8 P90 BN90S4**	135
47	211	0.9	29.6	3190	**C222_29.6 S2 M2SB4**	130	**C222_29.6 P90 BN90S4**	131
49	199	2.8	28.5	7000	**C413_28.5 S2 M2SB4**	142	**C413_28.5 P90 BN90S4**	143
49	202	2.5	28.3	7000	**C412_28.3 S2 M2SB4**	142	**C412_28.3 P90 BN90S4**	143
49	200	2.2	28.7	6190	**C363_28.7 S2 M2SB4**	138	**C363_28.7 P90 BN90S4**	139
52	193	1.0	27.2	3160	**C222_27.2 S2 M2SB4**	130	**C222_27.2 P90 BN90S4**	131
52	192	1.6	26.9	5220	**C322_26.9 S2 M2SB4**	134	**C322_26.9 P90 BN90S4**	135
53	183	2.4	26.2	5930	**C363_26.2 S2 M2SB4**	138	**C363_26.2 P90 BN90S4**	139
56	179	1.7	25.1	5180	**C322_25.1 S2 M2SB4**	134	**C322_25.1 P90 BN90S4**	135
58	173	1.2	24.3	3150	**C222_24.3 S2 M2SB4**	130	**C222_24.3 P90 BN90S4**	131
61	163	1.8	22.9	5050	**C322_22.9 S2 M2SB4**	134	**C322_22.9 P90 BN90S4**	135
62	161	3.1	22.6	6810	**C412_22.6 S2 M2SB4**	142	**C412_22.6 P90 BN90S4**	143
63	154	2.8	22.1	5680	**C363_22.1 S2 M2SB4**	138	**C363_22.1 P90 BN90S4**	139
65	153	1.3	21.5	3120	**C222_21.5 S2 M2SB4**	130	**C222_21.5 P90 BN90S4**	131
70	143	2.1	20.1	4920	**C322_20.1 S2 M2SB4**	134	**C322_20.1 P90 BN90S4**	135
70	143	1.3	20.0	3080	**C222_20.0 S2 M2SB4**	130	**C222_20.0 P90 BN90S4**	131
74	135	2.8	19.0	5580	**C362_19.0 S2 M2SB4**	138	**C362_19.0 P90 BN90S4**	139
77	130	2.1	18.2	4760	**C322_18.2 S2 M2SB4**	134	**C322_18.2 P90 BN90S4**	135
77	129	1.4	18.1	3020	**C222_18.1 S2 M2SB4**	130	**C222_18.1 P90 BN90S4**	131
81	123	3.1	17.2	5300	**C362_17.2 S2 M2SB4**	138	**C362_17.2 P90 BN90S4**	139
88	113	1.6	15.8	2970	**C222_15.8 S2 M2SB4**	130	**C222_15.8 P90 BN90S4**	131
90	111	2.4	15.6	4630	**C322_15.6 S2 M2SB4**	134	**C322_15.6 P90 BN90S4**	135
96	104	1.6	14.5	2940	**C222_14.5 S2 M2SB4**	130	**C222_14.5 P90 BN90S4**	131
99	100	2.5	14.1	4480	**C322_14.1 S2 M2SB4**	134	**C322_14.1 P90 BN90S4**	135
113	88	1.8	12.4	2840	**C222_12.4 S2 M2SB4**	130	**C222_12.4 P90 BN90S4**	131
114	88	2.8	12.3	4350	**C322_12.3 S2 M2SB4**	134	**C322_12.3 P90 BN90S4**	135
125	80	2.9	11.2	4200	**C322_11.2 S2 M2SB4**	134	**C322_11.2 P90 BN90S4**	135

1.1 kW

n_2 min-1	M_2 Nm	S	i	R_{n2} N	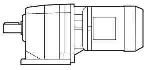		 IEC	
126	79	1.9	11.1	2800	**C222_11.1 S2 M2SB4**	130	**C222_11.1 P90 BN90S4**	131
139	72	0.9	10.1	1400	**C122_10.1 S2 M2SB4**	126	**C122_10.1 P90 BN90S4**	127
145	69	2.1	9.6	2700	**C222_9.6 S2 M2SB4**	130	**C222_9.6 P90 BN90S4**	131
151	66	3.3	9.3	4030	**C322_9.3 S2 M2SB4**	134	**C322_9.3 P90 BN90S4**	135
158	63	0.9	8.8	1560	**C122_8.8 S2 M2SB4**	126	**C122_8.8 P90 BN90S4**	127
162	62	2.2	8.7	2630	**C222_8.7 S2 M2SB4**	130	**C222_8.7 P90 BN90S4**	131
184	54	1.0	7.6	1550	**C122_7.6 S2 M2SB4**	126	**C122_7.6 P90 BN90S4**	127
198	50	2.6	7.1	2510	**C222_7.1 S2 M2SB4**	130	**C222_7.1 P90 BN90S4**	131
225	44	1.2	6.2	1220	**C122_6.2 S2 M2SB4**	126	**C122_6.2 P90 BN90S4**	127
230	43	2.4	6.1	2380	**C222_6.1 S2 M2SB4**	130	**C222_6.1 P90 BN90S4**	131
235	43	1.2	11.9	1420	**C122_11.9 S2 M2SA2**	126	**C122_11.9 P80 BN80B2**	127
250	40	1.3	5.6	1270	**C122_5.6 S2 M2SB4**	126	**C122_5.6 P90 BN90S4**	127
250	40	2.6	5.6	2350	**C222_5.6 S2 M2SB4**	130	**C222_5.6 P90 BN90S4**	131
252	40	3.0	11.1	2980	**C222_11.1 S2 M2SA2**	130	**C222_11.1 P80 BN80B2**	131
252	40	1.2	3.7	1320	**C122_3.7 S3 M3SA6**	126	**C122_3.7 P90 BN90L6**	127
278	36	1.4	10.1	1420	**C122_10.1 S2 M2SA2**	126	**C122_10.1 P80 BN80B2**	127
288	35	1.4	4.9	1370	**C122_4.9 S2 M2SB4**	126	**C122_4.9 P90 BN90S4**	127
294	34	2.9	4.8	2240	**C222_4.8 S2 M2SB4**	130	**C222_4.8 P90 BN90S4**	131
318	32	1.5	8.8	1370	**C122_8.8 S2 M2SA2**	126	**C122_8.8 P80 BN80B2**	127
325	31	1.5	4.3	1320	**C122_4.3 S2 M2SB4**	126	**C122_4.3 P90 BN90S4**	127
329	30	3.1	4.3	2200	**C222_4.3 S2 M2SB4**	130	**C222_4.3 P90 BN90S4**	131
332	30	1.4	2.8	1320	**C122_2.8 S3 M3SA6**	126	**C122_2.8 P90 BN90L6**	127
338	30	3.2	2.7	2160	**C222_2.7 S3 M3SA6**	130	**C222_2.7 P90 BN90L6**	131
367	27	1.7	7.6	1330	**C122_7.6 S2 M2SA2**	126	**C122_7.6 P80 BN80B2**	127
378	26	3.4	3.7	2090	**C222_3.7 S2 M2SB4**	130	**C222_3.7 P90 BN90S4**	131
383	26	1.6	3.7	1280	**C122_3.7 S2 M2SB4**	126	**C122_3.7 P90 BN90S4**	127
436	23	1.8	3.2	1230	**C122_3.2 S2 M2SB4**	126	**C122_3.2 P90 BN90S4**	127
449	22	1.9	6.2	1230	**C122_6.2 S2 M2SA2**	126	**C122_6.2 P80 BN80B2**	127
500	20	2.0	5.6	1190	**C122_5.6 S2 M2SA2**	126	**C122_5.6 P80 BN80B2**	127
506	20	1.9	2.8	1190	**C122_2.8 S2 M2SB4**	126	**C122_2.8 P90 BN90S4**	127
575	17	2.2	4.9	1150	**C122_4.9 S2 M2SA2**	126	**C122_4.9 P80 BN80B2**	127
651	16	2.3	4.3	1110	**C122_4.3 S2 M2SA2**	126	**C122_4.3 P80 BN80B2**	127
767	13	2.6	3.7	1070	**C122_3.7 S2 M2SA2**	126	**C122_3.7 P80 BN80B2**	127
875	12	1.5	3.2	1020	**C122_3.2 S2 M2SA2**	126	**C122_3.2 P80 BN80B2**	127
1012	10	3.0	2.8	980	**C122_2.8 S2 M2SA2**	126	**C122_2.8 P80 BN80B2**	127

1.5 kW

n_2 min-1	M_2 Nm	S	i	R_{n2} N	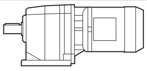		 IEC	
1.0	12595	1.0	908.2	85000	**C1004_908.2 S3 M3LA6**	163	**C1004_908.2 P100 BN100LA6**	164
1.3	9994	1.2	1081	85000	**C1004_1081 S3 M3SA4**	163	**C1004_1081 P90 BN90LA4**	164
1.6	8397	1.4	908.2	85000	**C1004_908.2 S3 M3SA4**	163	**C1004_908.2 P90 BN90LA4**	164
1.7	7803	0.9	844.0	60000	**C904_844.0 S3 M3SA4**	160	**C904_844.0 P90 BN90LA4**	161
2.0	6659	1.8	720.3	85000	**C1004_720.3 S3 M3SA4**	163	**C1004_720.3 P90 BN90LA4**	164
2.0	6584	1.1	712.2	60000	**C904_712.2 S3 M3SA4**	160	**C904_712.2 P90 BN90LA4**	161
2.6	4939	1.5	534.2	60000	**C904_534.2 S3 M3SA4**	160	**C904_534.2 P90 BN90LA4**	161
3.1	4226	1.7	457.1	60000	**C904_457.1 S3 M3SA4**	160	**C904_457.1 P90 BN90LA4**	161
3.1	4210	1.0	455.4	35000	**C804_455.4 S3 M3SA4**	157	**C804_455.4 P90 BN90LA4**	158

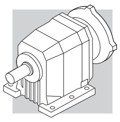

1.5 kW

n_2 min^{-1}	M_2 Nm	S	i	R_{n2} N	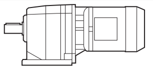		IEC	
3.4	3874	1.9	419.0	60000	**C904_419.0 S3 M3SA4**	160	**C904_419.0 P90 BN90LA4**	161
3.4	3860	1.0	417.5	35000	**C804_417.5 S3 M3SA4**	157	**C804_417.5 P90 BN90LA4**	158
4.2	3134	2.3	339.0	60000	**C904_339.0 S3 M3SA4**	160	**C904_339.0 P90 BN90LA4**	161
4.2	3091	1.3	334.3	35000	**C804_334.3 S3 M3SA4**	157	**C804_334.3 P90 BN90LA4**	158
4.8	2708	2.7	292.9	60000	**C904_292.9 S3 M3SA4**	160	**C904_292.9 P90 BN90LA4**	161
4.9	2641	1.5	285.7	35000	**C804_285.7 S3 M3SA4**	157	**C804_285.7 P90 BN90LA4**	158
5.2	2517	0.9	272.2	25000	**C704_272.2 S3 M3SA4**	154	**C704_272.2 P90 BN90LA4**	155
5.4	2421	1.7	261.9	35000	**C804_261.9 S3 M3SA4**	157	**C804_261.9 P90 BN90LA4**	158
5.6	2323	1.0	251.3	25000	**C704_251.3 S3 M3SA4**	154	**C704_251.3 P90 BN90LA4**	155
5.9	2261	1.0	239.3	25000	**C703_239.3 S3 M3SA4**	154	**C703_239.3 P90 BN90LA4**	155
6.5	2010	0.8	217.4	16000	**C614_217.4 S3 M3SA4**	150	**C614_217.4 P90 BN90LA4**	151
6.5	2039	2.0	215.8	35000	**C803_215.8 S3 M3SA4**	157	**C803_215.8 P90 BN90LA4**	158
7.3	1834	1.3	194.1	25000	**C703_194.1 S3 M3SA4**	154	**C703_194.1 P90 BN90LA4**	155
7.9	1693	1.4	179.2	25000	**C703_179.2 S3 M3SA4**	154	**C703_179.2 P90 BN90LA4**	155
7.9	1687	0.9	178.6	16000	**C613_178.6 S3 M3SA4**	150	**C613_178.6 P90 BN90LA4**	151
8.3	1597	2.5	169.0	35000	**C803_169.0 S3 M3SA4**	157	**C803_169.0 P90 BN90LA4**	158
8.6	1554	1.0	164.5	16000	**C613_164.5 S3 M3SA4**	150	**C613_164.5 P90 BN90LA4**	151
9.4	1420	1.6	150.3	25000	**C703_150.3 S3 M3SA4**	154	**C703_150.3 P90 BN90LA4**	155
9.4	1418	1.1	150.0	16000	**C613_150.0 S3 M3SA4**	150	**C613_150.0 P90 BN90LA4**	151
9.5	1409	2.8	149.1	35000	**C803_149.1 S3 M3SA4**	157	**C803_149.1 P90 BN90LA4**	158
10.0	1327	1.2	140.5	16000	**C613_140.5 S3 M3SA4**	150	**C613_140.5 P90 BN90LA4**	151
10.3	1298	1.8	137.4	25000	**C703_137.4 S3 M3SA4**	154	**C703_137.4 P90 BN90LA4**	155
10.3	1291	3.1	136.7	35000	**C803_136.7 S3 M3SA4**	157	**C803_136.7 P90 BN90LA4**	158
11.0	1211	1.3	128.1	16000	**C613_128.1 S3 M3SA4**	150	**C613_128.1 P90 BN90LA4**	151
11.1	1198	1.9	126.8	25000	**C703_126.8 S3 M3SA4**	154	**C703_126.8 P90 BN90LA4**	155
12.4	1073	1.5	113.6	16000	**C613_113.6 S3 M3SA4**	150	**C613_113.6 P90 BN90LA4**	151
12.4	1073	0.9	113.6	10000	**C513_113.6 S3 M3SA4**	146	**C513_113.6 P90 BN90LA4**	147
13.6	981	2.3	103.8	25000	**C703_103.8 S3 M3SA4**	154	**C703_103.8 P90 BN90LA4**	155
13.6	979	1.6	103.6	16000	**C613_103.6 S3 M3SA4**	150	**C613_103.6 P90 BN90LA4**	151
13.8	962	1.0	101.8	10000	**C513_101.8 S3 M3SA4**	146	**C513_101.8 P90 BN90LA4**	147
15.2	878	1.1	93.0	10000	**C513_93.0 S3 M3SA4**	146	**C513_93.0 P90 BN90LA4**	147
15.5	860	1.9	91.0	16000	**C613_91.0 S3 M3SA4**	150	**C613_91.0 P90 BN90LA4**	151
16.0	833	2.8	88.2	25000	**C703_88.2 S3 M3SA4**	154	**C703_88.2 P90 BN90LA4**	155
16.5	826	1.0	57.0	10000	**C512_57.0 S3 M3LA6**	146	**C512_57.0 P100 BN100LA6**	147
17.0	785	2.0	83.0	16000	**C613_83.0 S3 M3SA4**	150	**C613_83.0 P90 BN90LA4**	151
17.3	769	3.0	81.4	25000	**C703_81.4 S3 M3SA4**	154	**C703_81.4 P90 BN90LA4**	155
17.7	755	1.3	79.9	10000	**C513_79.9 S3 M3SA4**	146	**C513_79.9 P90 BN90LA4**	147
18.3	744	1.0	51.4	10000	**C512_51.4 S3 M3LA6**	146	**C512_51.4 P100 BN100LA6**	147
19.0	701	2.3	74.2	16000	**C613_74.2 S3 M3SA4**	150	**C613_74.2 P90 BN90LA4**	151
19.3	689	1.5	72.9	10000	**C513_72.9 S3 M3SA4**	146	**C513_72.9 P90 BN90LA4**	147
19.7	692	1.2	47.8	10000	**C512_47.8 S3 M3LA6**	146	**C512_47.8 P100 BN100LA6**	147
19.8	674	3.4	71.3	25000	**C703_71.3 S3 M3SA4**	154	**C703_71.3 P90 BN90LA4**	155
20.8	640	2.5	67.7	16000	**C613_67.7 S3 M3SA4**	150	**C613_67.7 P90 BN90LA4**	151
21.8	624	1.3	43.1	10000	**C512_43.1 S3 M3LA6**	146	**C512_43.1 P100 BN100LA6**	147
21.8	610	1.6	64.6	10000	**C513_64.6 S3 M3SA4**	146	**C513_64.6 P90 BN90LA4**	147
21.9	607	1.0	64.3	7000	**C413_64.3 S3 M3SA4**	142	**C413_64.3 P90 BN90LA4**	143
23.9	557	1.8	59.0	10000	**C513_59.0 S3 M3SA4**	146	**C513_59.0 P90 BN90LA4**	147
24.0	554	1.1	58.7	7000	**C413_58.7 S3 M3SA4**	142	**C413_58.7 P90 BN90LA4**	143
24.1	554	2.9	58.6	16000	**C613_58.6 S3 M3SA4**	150	**C613_58.6 P90 BN90LA4**	151
24.7	550	1.4	57.0	10000	**C512_57.0 S3 M3SA4**	146	**C512_57.0 P90 BN90LA4**	147
26.4	505	3.2	53.5	16000	**C613_53.5 S3 M3SA4**	150	**C613_53.5 P90 BN90LA4**	151

1.5 kW

n_2 min-1	M_2 Nm	S	i	R_{n2} N	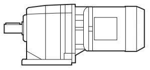			
27.4	486	1.2	51.5	7000	**C413_51.5 S3 M3SA4**	142	**C413_51.5 P90 BN90LA4**	143
27.4	496	1.4	51.4	10000	**C512_51.4 S3 M3SA4**	146	**C512_51.4 P90 BN90LA4**	147
27.6	483	2.1	51.2	10000	**C513_51.2 S3 M3SA4**	146	**C513_51.2 P90 BN90LA4**	147
29.3	457	1.0	48.2	6290	**C363_48.2 S3 M3SA4**	138	**C363_48.2 P90 BN90LA4**	139
29.5	462	1.7	47.8	10000	**C512_47.8 S3 M3SA4**	146	**C512_47.8 P90 BN90LA4**	147
30	444	1.4	47.0	7000	**C413_47.0 S3 M3SA4**	142	**C413_47.0 P90 BN90LA4**	143
30	441	2.3	46.7	10000	**C513_46.7 S3 M3SA4**	146	**C513_46.7 P90 BN90LA4**	147
32	432	1.2	44.8	7000	**C412_44.8 S3 M3SA4**	142	**C412_44.8 P90 BN90LA4**	143
32	412	1.1	43.5	6110	**C363_43.5 S3 M3SA4**	138	**C363_43.5 P90 BN90LA4**	139
33	416	1.9	43.1	10000	**C512_43.1 S3 M3SA4**	146	**C512_43.1 P90 BN90LA4**	147
35	382	2.6	40.5	10000	**C513_40.5 S3 M3SA4**	146	**C513_40.5 P90 BN90LA4**	147
35	390	2.0	40.4	10000	**C512_40.4 S3 M3SA4**	146	**C512_40.4 P90 BN90LA4**	147
35	381	1.6	40.3	7000	**C413_40.3 S3 M3SA4**	142	**C413_40.3 P90 BN90LA4**	143
37	361	1.2	38.1	6110	**C363_38.1 S3 M3SA4**	138	**C363_38.1 P90 BN90LA4**	139
38	358	1.4	37.1	7000	**C412_37.1 S3 M3SA4**	142	**C412_37.1 P90 BN90LA4**	143
38	348	1.7	36.8	7000	**C413_36.8 S3 M3SA4**	142	**C413_36.8 P90 BN90LA4**	143
39	351	2.2	36.4	10000	**C512_36.4 S3 M3SA4**	146	**C512_36.4 P90 BN90LA4**	147
39	350	0.9	36.1	5100	**C322_36.1 S3 M3SA4**	134	**C322_36.1 P90 BN90LA4**	135
41	328	1.4	34.6	5950	**C363_34.6 S3 M3SA4**	138	**C363_34.6 P90 BN90LA4**	139
42	322	1.6	33.4	7000	**C412_33.4 S3 M3SA4**	142	**C412_33.4 P90 BN90LA4**	143
43	319	2.5	33.0	10000	**C512_33.0 S3 M3SA4**	146	**C512_33.0 P90 BN90LA4**	147
43	321	0.9	33.1	5050	**C322_33.1 S3 M3SA4**	134	**C322_33.1 P90 BN90LA4**	135
45	303	1.6	31.4	6990	**C412_31.4 S3 M3SA4**	142	**C412_31.4 P90 BN90LA4**	143
45	295	1.9	31.2	7000	**C413_31.2 S3 M3SA4**	142	**C413_31.2 P90 BN90LA4**	143
47	287	2.8	29.8	10000	**C512_29.8 S3 M3SA4**	146	**C512_29.8 P90 BN90LA4**	147
47	288	1.0	29.8	4970	**C322_29.8 S3 M3SA4**	134	**C322_29.8 P90 BN90LA4**	135
49	272	1.7	28.7	5830	**C363_28.7 S3 M3SA4**	138	**C363_28.7 P90 BN90LA4**	139
50	273	1.8	28.3	6830	**C412_28.3 S3 M3SA4**	142	**C412_28.3 P90 BN90LA4**	143
52	261	1.2	26.9	4890	**C322_26.9 S3 M3SA4**	134	**C322_26.9 P90 BN90LA4**	135
54	250	3.2	25.9	10000	**C512_25.9 S3 M3SA4**	146	**C512_25.9 P90 BN90LA4**	147
54	249	1.8	26.2	5710	**C363_26.2 S3 M3SA4**	138	**C363_26.2 P90 BN90LA4**	139
56	242	2.1	25.0	6680	**C412_25.0 S3 M3SA4**	142	**C412_25.0 P90 BN90LA4**	143
56	243	1.2	25.1	4840	**C322_25.1 S3 M3SA4**	134	**C322_25.1 P90 BN90LA4**	135
62	222	1.3	22.9	4750	**C322_22.9 S3 M3SA4**	134	**C322_22.9 P90 BN90LA4**	135
63	218	2.3	22.6	6510	**C412_22.6 S3 M3SA4**	142	**C412_22.6 P90 BN90LA4**	143
64	210	2.0	22.1	5530	**C363_22.1 S3 M3SA4**	138	**C363_22.1 P90 BN90LA4**	139
66	208	0.9	21.5	2600	**C222_21.5 S3 M3SA4**	130	**C222_21.5 P90 BN90LA4**	131
70	195	1.5	20.1	4650	**C322_20.1 S3 M3SA4**	134	**C322_20.1 P90 BN90LA4**	135
70	194	1.0	20.0	2740	**C222_20.0 S3 M3SA4**	130	**C222_20.0 P90 BN90LA4**	131
71	191	2.5	19.8	6330	**C412_19.8 S3 M3SA4**	142	**C412_19.8 P90 BN90LA4**	143
74	184	2.1	19.0	5330	**C362_19.0 S3 M3SA4**	138	**C362_19.0 P90 BN90LA4**	139
78	176	1.6	18.2	4520	**C322_18.2 S3 M3SA4**	134	**C322_18.2 P90 BN90LA4**	135
78	176	1.0	18.1	2700	**C222_18.1 S3 M3SA4**	130	**C222_18.1 P90 BN90LA4**	131
79	172	2.8	17.8	6160	**C412_17.8 S3 M3SA4**	142	**C412_17.8 P90 BN90LA4**	143
82	167	2.3	17.2	5140	**C362_17.2 S3 M3SA4**	138	**C362_17.2 P90 BN90LA4**	139
89	153	2.9	15.8	6000	**C412_15.8 S3 M3SA4**	142	**C412_15.8 P90 BN90LA4**	143
89	153	1.1	15.8	2700	**C222_15.8 S3 M3SA4**	130	**C222_15.8 P90 BN90LA4**	131
90	151	1.8	15.6	4410	**C322_15.6 S3 M3SA4**	134	**C322_15.6 P90 BN90LA4**	135
96	143	2.7	14.8	5030	**C362_14.8 S3 M3SA4**	138	**C362_14.8 P90 BN90LA4**	139
97	141	1.2	14.5	2700	**C222_14.5 S3 M3SA4**	130	**C222_14.5 P90 BN90LA4**	131
99	137	3.2	14.2	5830	**C412_14.2 S3 M3SA4**	142	**C412_14.2 P90 BN90LA4**	143

1.5 kW

n_2 min⁻¹	M_2 Nm	S	i	R_{n2} N			IEC	
100	136	1.8	14.1	4280	**C322_14.1 S3 M3SA4**	134	**C322_14.1 P90 BN90LA4**	135
106	129	2.9	13.3	4890	**C362_13.3 S3 M3SA4**	138	**C362_13.3 P90 BN90LA4**	139
114	120	1.3	12.4	2630	**C222_12.4 S3 M3SA4**	130	**C222_12.4 P90 BN90LA4**	131
114	119	2.1	12.3	4180	**C322_12.3 S3 M3SA4**	134	**C322_12.3 P90 BN90LA4**	135
121	113	3.4	11.7	4740	**C362_11.7 S3 M3SA4**	138	**C362_11.7 P90 BN90LA4**	139
126	109	2.1	11.2	4050	**C322_11.2 S3 M3SA4**	134	**C322_11.2 P90 BN90LA4**	135
127	107	1.4	11.1	2600	**C222_11.1 S3 M3SA4**	130	**C222_11.1 P90 BN90LA4**	131
146	93	1.6	9.6	2530	**C222_9.6 S3 M3SA4**	130	**C222_9.6 P90 BN90LA4**	131
152	90	2.4	9.3	3900	**C322_9.3 S3 M3SA4**	134	**C322_9.3 P90 BN90LA4**	135
163	84	1.6	8.7	2470	**C222_8.7 S3 M3SA4**	130	**C222_8.7 P90 BN90LA4**	131
166	82	2.5	8.5	3790	**C322_8.5 S3 M3SA4**	134	**C322_8.5 P90 BN90LA4**	135
177	77	1.8	15.8	2440	**C222_15.8 S2 M2SB2**	130	**C222_15.8 P90 BN90SA2**	131
190	72	2.3	5.0	3610	**C322_5.0 S3 M3LA6**	134	**C322_5.0 P100 BN100LA6**	135
197	69	2.9	7.2	3640	**C322_7.2 S3 M3SA4**	134	**C322_7.2 P90 BN90LA4**	135
199	69	1.9	7.1	2380	**C222_7.1 S3 M3SA4**	130	**C222_7.1 P90 BN90LA4**	131
203	67	3.0	4.6	4050	**C362_4.6 S3 M3LA6**	138	**C362_4.6 P100 BN100LA6**	139
225	61	2.6	6.3	3450	**C322_6.3 S3 M3SA4**	134	**C322_6.3 P90 BN90LA4**	135
226	60	0.9	6.2	600	**C122_6.2 S3 M3SA4**	126	**C122_6.2 P90 BN90LA4**	127
232	59	1.8	6.1	2250	**C222_6.1 S3 M3SA4**	130	**C222_6.1 P90 BN90LA4**	131
235	58	0.9	11.9	1250	**C122_11.9 S2 M2SB2**	126	**C122_11.9 P90 BN90SA2**	127
249	55	2.8	5.7	3320	**C322_5.7 S3 M3SA4**	134	**C322_5.7 P90 BN90LA4**	135
252	54	0.9	5.6	720	**C122_5.6 S3 M3SA4**	126	**C122_5.6 P90 BN90LA4**	127
252	54	1.9	5.6	2200	**C222_5.6 S3 M3SA4**	130	**C222_5.6 P90 BN90LA4**	131
254	54	2.0	3.7	2210	**C222_3.7 S3 M3LA6**	130	**C222_3.7 P100 BN100LA6**	131
278	49	1.0	10.1	1340	**C122_10.1 S2 M2SB2**	126	**C122_10.1 P90 BN90SA2**	127
285	48	3.2	5.0	3240	**C322_5.0 S3 M3SA4**	134	**C322_5.0 P90 BN90LA4**	135
285	48	2.1	3.3	2120	**C222_3.7 S3 M3LA6**	130	**C222_3.7 P100 BN100LA6**	131
290	47	1.0	4.9	840	**C122_4.9 S3 M3SA4**	126	**C122_4.9 P90 BN90LA4**	127
296	46	2.2	4.8	2140	**C222_4.8 S3 M3SA4**	130	**C222_4.8 P90 BN90LA4**	131
318	43	1.1	8.8	1300	**C122_8.8 S2 M2SB2**	126	**C122_8.8 P90 BN90SA2**	127
322	42	2.6	8.7	2130	**C222_8.7 S2 M2SB2**	130	**C222_8.7 P90 BN90SA2**	131
327	42	1.1	4.3	930	**C122_4.3 S3 M3SA4**	126	**C122_4.3 P90 BN90LA4**	127
331	41	2.3	4.3	2100	**C222_4.3 S3 M3SA4**	130	**C222_4.3 P90 BN90LA4**	131
340	40	1.1	2.8	1000	**C122_2.8 S3 M3LA6**	126	**C122_2.8 P100 BN100LA6**	127
345	39	2.4	2.7	2060	**C222_2.7 S3 M3LA6**	130	**C222_2.7 P100 BN100LA6**	131
367	37	1.2	7.6	1270	**C122_7.6 S2 M2SB2**	126	**C122_7.6 P90 BN90SA2**	127
380	36	2.5	3.7	2020	**C222_3.7 S3 M3SA4**	130	**C222_3.7 P90 BN90LA4**	131
386	35	1.2	3.7	1100	**C122_3.7 S3 M3SA4**	126	**C122_3.7 P90 BN90LA4**	127
395	34	3.1	7.1	2030	**C222_7.1 S2 M2SB2**	130	**C222_7.1 P90 BN90SA2**	131
424	32	2.6	3.3	2000	**C222_3.3 S3 M3SA4**	130	**C222_3.3 P90 BN90LA4**	131
440	31	1.3	3.2	1120	**C122_3.2 S3 M3SA4**	126	**C122_3.2 P90 BN90LA4**	127
449	30	1.4	6.2	1180	**C122_6.2 S2 M2SB2**	126	**C122_6.2 P90 BN90SA2**	127
460	30	2.9	6.1	1920	**C222_6.1 S2 M2SB2**	130	**C222_6.1 P90 BN90SA2**	131
500	27	3.0	5.6	1860	**C222_5.6 S2 M2SB2**	130	**C222_5.6 P90 BN90SA2**	131
500	27	1.5	5.6	1140	**C122_5.6 S2 M2SB2**	126	**C122_5.6 P90 BN90SA2**	127
510	27	1.4	2.8	1140	**C122_2.8 S3 M3SA4**	126	**C122_2.8 P90 BN90LA4**	127
518	26	3.0	2.7	1870	**C222_2.7 S3 M3SA4**	130	**C222_2.7 P90 BN90LA4**	131
575	24	1.6	4.9	1110	**C122_4.9 S2 M2SB2**	126	**C122_4.9 P90 BN90SA2**	127
587	23	3.5	4.8	1810	**C222_4.8 S2 M2SB2**	130	**C222_4.8 P90 BN90SA2**	131
651	21	1.7	4.3	1070	**C122_4.3 S2 M2SB2**	126	**C122_4.3 P90 BN90SA2**	127
767	18	1.9	3.7	1030	**C122_3.7 S2 M2SB2**	126	**C122_3.7 P90 BN90SA2**	127

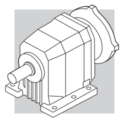

1.5 kW

n$_2$ min^{-1}	M$_2$ Nm	S	i	R$_{n2}$ N	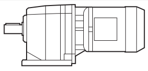		IEC	
875	16	2.1	3.2	990	**C122_3.2 S2 M2SB2**	126	**C122_3.2 P90 BN90SA2**	127
1012	13	2.2	2.8	960	**C122_2.8 S2 M2SB2**	126	**C122_2.8 P90 BN90SA2**	127

2.2 kW

n$_2$ min^{-1}	M$_2$ Nm	S	i	R$_{n2}$ N	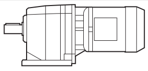		IEC	
1.6	12315	1.0	908.2	85000	**C1004_908.2 S3 M3LA4**	163	**C1004_908.2 P100 BN100LA4**	164
2.0	9767	1.2	720.3	85000	**C1004_720.3 S3 M3LA4**	163	**C1004_720.3 P100 BN100LA4**	164
2.4	7900	1.5	582.6	85000	**C1004_582.6 S3 M3LA4**	163	**C1004_582.6 P100 BN100LA4**	164
2.6	7244	1.0	534.2	60000	**C904_534.2 S3 M3LA4**	160	**C904_534.2 P100 BN100LA4**	161
3.1	6198	1.2	457.1	60000	**C904_457.1 S3 M3LA4**	160	**C904_457.1 P100 BN100LA4**	161
3.7	5159	2.3	380.5	85000	**C1004_380.5 S3 M3LA4**	163	**C1004_380.5 P100 BN100LA4**	164
3.8	5014	1.4	369.8	60000	**C904_369.8 S3 M3LA4**	160	**C904_369.8 P100 BN100LA4**	161
4.8	3972	1.8	292.9	60000	**C904_292.9 S3 M3LA4**	160	**C904_292.9 P100 BN100LA4**	161
4.9	3874	1.0	285.7	35000	**C804_285.7 S3 M3LA4**	157	**C804_285.7 P100 BN100LA4**	158
5.4	3551	1.1	261.9	35000	**C804_261.9 S3 M3LA4**	157	**C804_261.9 P100 BN100LA4**	158
6.1	3142	2.3	231.7	60000	**C904_231.7 S3 M3LA4**	160	**C904_231.7 P100 BN100LA4**	161
6.5	2991	1.3	215.8	35000	**C803_215.8 S3 M3LA4**	157	**C803_215.8 P100 BN100LA4**	158
7.6	2555	1.6	184.4	35000	**C803_184.4 S3 M3LA4**	157	**C803_184.4 P100 BN100LA4**	158
7.9	2483	0.9	179.2	25000	**C703_179.2 S3 M3LA4**	154	**C703_179.2 P100 BN100LA4**	155
8.7	2256	1.0	162.8	25000	**C703_162.8 S3 M3LA4**	154	**C703_162.8 P100 BN100LA4**	155
10.3	1904	1.2	137.4	25000	**C703_137.4 S3 M3LA4**	154	**C703_137.4 P100 BN100LA4**	155
10.3	1894	2.1	136.7	35000	**C803_136.7 S3 M3LA4**	157	**C803_136.7 P100 BN100LA4**	158
11.0	1776	0.9	128.1	16000	**C613_128.1 S3 M3LA4**	150	**C613_128.1 P100 BN100LA4**	151
12.4	1574	1.0	113.6	16000	**C613_113.6 S3 M3LA4**	150	**C613_113.6 P100 BN100LA4**	151
12.5	1558	1.5	112.4	25000	**C703_112.4 S3 M3LA4**	154	**C703_112.4 P100 BN100LA4**	155
12.9	1517	2.6	109.5	35000	**C803_109.5 S3 M3LA4**	157	**C803_109.5 P100 BN100LA4**	158
13.6	1438	1.6	103.8	25000	**C703_103.8 S3 M3LA4**	154	**C703_103.8 P100 BN100LA4**	155
13.6	1436	1.1	103.6	16000	**C613_103.6 S3 M3LA4**	150	**C613_103.6 P100 BN100LA4**	151
14.5	1350	3.0	97.4	35000	**C803_97.4 S3 M3LA4**	157	**C803_97.4 P100 BN100LA4**	158
15.5	1261	1.3	91.0	16000	**C613_91.0 S3 M3LA4**	150	**C613_91.0 P100 BN100LA4**	151
15.8	1237	3.2	89.3	35000	**C803_89.3 S3 M3LA4**	157	**C803_89.3 P100 BN100LA4**	158
16.0	1222	1.9	88.2	25000	**C703_88.2 S3 M3LA4**	154	**C703_88.2 P100 BN100LA4**	155
17.0	1151	1.4	83.0	16000	**C613_83.0 S3 M3LA4**	150	**C613_83.0 P100 BN100LA4**	151
17.3	1128	2.0	81.4	25000	**C703_81.4 S3 M3LA4**	154	**C703_81.4 P100 BN100LA4**	155
17.7	1107	0.9	79.9	10000	**C513_79.9 S3 M3LA4**	146	**C513_79.9 P100 BN100LA4**	147
19.0	1028	1.6	74.2	16000	**C613_74.2 S3 M3LA4**	150	**C613_74.2 P100 BN100LA4**	151
19.3	1011	1.0	72.9	10000	**C513_72.9 S3 M3LA4**	146	**C513_72.9 P100 BN100LA4**	147
19.8	989	2.3	71.3	25000	**C703_71.3 S3 M3LA4**	154	**C703_71.3 P100 BN100LA4**	155
20.8	938	1.7	67.7	16000	**C613_67.7 S3 M3LA4**	150	**C613_67.7 P100 BN100LA4**	151
21.4	913	2.5	65.9	25000	**C703_65.9 S3 M3LA4**	154	**C703_65.9 P100 BN100LA4**	155
21.8	895	1.1	64.6	10000	**C513_64.6 S3 M3LA4**	146	**C513_64.6 P100 BN100LA4**	147
23.9	817	1.2	59.0	10000	**C513_59.0 S3 M3LA4**	146	**C513_59.0 P100 BN100LA4**	147
24.1	812	2.0	58.6	16000	**C613_58.6 S3 M3LA4**	150	**C613_58.6 P100 BN100LA4**	151
24.7	807	1.0	57.0	10000	**C512_57.0 S3 M3LA4**	146	**C512_57.0 P100 BN100LA4**	147
25.0	783	2.9	56.5	25000	**C703_56.5 S3 M3LA4**	154	**C703_56.5 P100 BN100LA4**	155
26.4	741	2.2	53.5	16000	**C613_53.5 S3 M3LA4**	150	**C613_53.5 P100 BN100LA4**	151
27.4	728	1.0	51.4	10000	**C512_51.4 S3 M3LA4**	146	**C512_51.4 P100 BN100LA4**	147

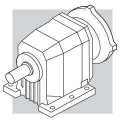

2.2 kW

n_2 min^{-1}	M_2 Nm	S	i	R_{n2} N	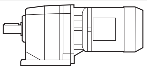			
27.6	709	1.4	51.2	10000	**C513_51.2 S3 M3LA4**	146	**C513_51.2 P100 BN100LA4**	147
29.5	677	1.2	47.8	10000	**C512_47.8 S3 M3LA4**	146	**C512_47.8 P100 BN100LA4**	147
29.6	660	2.4	47.6	16000	**C613_47.6 S3 M3LA4**	150	**C613_47.6 P100 BN100LA4**	151
30	651	0.9	47.0	6440	**C413_47.0 S3 M3LA4**	142	**C413_47.0 P100 BN100LA4**	143
30	647	1.5	46.7	10000	**C513_46.7 S3 M3LA4**	146	**C513_46.7 P100 BN100LA4**	147
32	602	2.7	43.4	16000	**C613_43.4 S3 M3LA4**	150	**C613_43.4 P100 BN100LA4**	151
33	610	1.3	43.1	10000	**C512_43.1 S3 M3LA4**	146	**C512_43.1 P100 BN100LA4**	147
35	561	1.8	40.5	10000	**C513_40.5 S3 M3LA4**	146	**C513_40.5 P100 BN100LA4**	147
35	571	1.4	40.4	10000	**C512_40.4 S3 M3LA4**	146	**C512_40.4 P100 BN100LA4**	147
35	559	1.1	40.3	6460	**C413_40.3 S3 M3LA4**	142	**C413_40.3 P100 BN100LA4**	143
37	538	2.5	38.0	16000	**C612_38.0 S3 M3LA4**	150	**C612_38.0 P100 BN100LA4**	151
38	525	1.0	37.1	6370	**C412_37.1 S3 M3LA4**	142	**C412_37.1 P100 BN100LA4**	143
38	512	2.0	37.0	10000	**C513_37.0 S3 M3LA4**	146	**C513_37.0 P100 BN100LA4**	147
38	510	1.2	36.8	6390	**C413_36.8 S3 M3LA4**	142	**C413_36.8 P100 BN100LA4**	143
39	515	1.5	36.4	10000	**C512_36.4 S3 M3LA4**	146	**C512_36.4 P100 BN100LA4**	147
39	501	3.1	36.1	16000	**C613_36.1 S3 M3LA4**	150	**C613_36.1 P100 BN100LA4**	151
41	484	2.5	34.2	16000	**C612_34.2 S3 M3LA4**	150	**C612_34.2 P100 BN100LA4**	151
41	479	0.9	34.6	5350	**C363_34.6 S3 M3LA4**	138	**C363_34.6 P100 BN100LA4**	139
42	473	1.1	33.4	6290	**C412_33.4 S3 M3LA4**	142	**C412_33.4 P100 BN100LA4**	143
43	468	1.7	33.0	10000	**C512_33.0 S3 M3LA4**	146	**C512_33.0 P100 BN100LA4**	147
43	457	3.3	33.0	16000	**C613_33.0 S3 M3LA4**	150	**C613_33.0 P100 BN100LA4**	151
45	445	1.1	31.4	6290	**C412_31.4 S3 M3LA4**	142	**C412_31.4 P100 BN100LA4**	143
46	431	3.1	30.4	16000	**C612_30.4 S3 M3LA4**	150	**C612_30.4 P100 BN100LA4**	151
47	421	1.9	29.8	10000	**C512_29.8 S3 M3LA4**	146	**C512_29.8 P100 BN100LA4**	147
49	398	1.1	28.7	5220	**C363_28.7 S3 M3LA4**	138	**C363_28.7 P100 BN100LA4**	139
50	401	1.2	28.3	6190	**C412_28.3 S3 M3LA4**	142	**C412_28.3 P100 BN100LA4**	143
51	388	3.5	27.4	15900	**C612_27.4 S3 M3LA4**	150	**C612_27.4 P100 BN100LA4**	151
54	367	2.2	25.9	10000	**C512_25.9 S3 M3LA4**	146	**C512_25.9 P100 BN100LA4**	147
54	363	1.2	26.2	5140	**C363_26.2 S3 M3LA4**	138	**C363_26.2 P100 BN100LA4**	139
56	355	0.8	25.1	4270	**C322_25.1 S3 M3LA4**	134	**C322_25.1 P100 BN100LA4**	135
56	355	1.4	25.0	6120	**C412_25.0 S3 M3LA4**	142	**C412_25.0 P100 BN100LA4**	143
60	331	2.4	23.4	10000	**C512_23.4 S3 M3LA4**	146	**C512_23.4 P100 BN100LA4**	147
62	324	0.9	22.9	4240	**C322_22.9 S3 M3LA4**	134	**C322_22.9 P100 BN100LA4**	135
63	319	1.6	22.6	6000	**C412_22.6 S3 M3LA4**	142	**C412_22.6 P100 BN100LA4**	143
64	307	1.4	22.1	5060	**C363_22.1 S3 M3LA4**	138	**C363_22.1 P100 BN100LA4**	139
66	308	0.9	14.1	4170	**C322_14.1 S3 M3LC6**	134	**C322_14.1 P112 BN112M6**	135
67	297	2.7	21.0	10000	**C512_21.0 S3 M3LA4**	146	**C512_21.0 P100 BN100LA4**	147
70	284	1.0	20.1	4200	**C322_20.1 S3 M3LA4**	134	**C322_20.1 P100 BN100LA4**	135
71	280	1.7	19.8	5890	**C412_19.8 S3 M3LA4**	142	**C412_19.8 P100 BN100LA4**	143
74	269	1.4	19.0	4920	**C362_19.0 S3 M3LA4**	138	**C362_19.0 P100 BN100LA4**	139
75	267	3.0	18.9	10000	**C512_18.9 S3 M3LA4**	146	**C512_18.9 P100 BN100LA4**	147
76	269	1.1	12.3	4100	**C322_12.3 S3 M3LC6**	134	**C322_12.3 P112 BN112M6**	135
78	257	1.1	18.2	4120	**C322_18.2 S3 M3LA4**	134	**C322_18.2 P100 BN100LA4**	135
79	252	1.9	17.8	5760	**C412_17.8 S3 M3LA4**	142	**C412_17.8 P100 BN100LA4**	143
82	244	1.6	17.2	4800	**C362_17.2 S3 M3LA4**	138	**C362_17.2 P100 BN100LA4**	139
83	245	1.1	11.2	4060	**C322_11.2 S3 M3LC6**	134	**C322_11.2 P112 BN112M6**	135
85	235	3.4	16.6	10000	**C512_16.6 S3 M3LA4**	146	**C512_16.6 P100 BN100LA4**	147
89	224	2.0	15.8	5650	**C412_15.8 S3 M3LA4**	142	**C412_15.8 P100 BN100LA4**	143
90	221	1.2	15.6	4060	**C322_15.6 S3 M3LA4**	134	**C322_15.6 P100 BN100LA4**	135
96	209	1.8	14.8	4710	**C362_14.8 S3 M3LA4**	138	**C362_14.8 P100 BN100LA4**	139
99	202	2.2	14.2	5510	**C412_14.2 S3 M3LA4**	142	**C412_14.2 P100 BN100LA4**	143

2.2 kW

n_2 min^{-1}	M_2 Nm	S	i	R_{n2} N	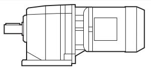			
100	203	1.3	9.3	3960	**C322_9.3 S3 M3LC6**	134	**C322_9.3 P112 BN112M6**	135
100	199	1.3	14.1	3980	**C322_14.1 S3 M3LA4**	134	**C322_14.1 P100 BN100LA4**	135
106	189	2.0	13.3	4590	**C362_13.3 S3 M3LA4**	138	**C362_13.3 P100 BN100LA4**	139
114	175	2.4	12.4	5360	**C412_12.4 S3 M3LA4**	142	**C412_12.4 P100 BN100LA4**	143
114	176	0.9	12.4	2270	**C222_12.4 S3 M3LA4**	130	**C222_12.4 P100 BN100LA4**	131
114	174	1.4	12.3	3900	**C322_12.3 S3 M3LA4**	134	**C322_12.3 P100 BN100LA4**	135
109	186	1.3	8.5	3890	**C322_8.5 S3 M3LC6**	134	**C322_8.5 P112 BN112M6**	135
121	165	2.3	11.7	4490	**C362_11.7 S3 M3LA4**	138	**C362_11.7 P100BN100LA4**	139
126	158	2.7	11.2	5220	**C412_11.2 S3 M3LA4**	142	**C412_11.2 P100 BN100LA4**	143
126	159	1.5	11.2	3800	**C322_11.2 S3 M3LA4**	134	**C322_11.2 P100 BN100LA4**	135
127	157	1.0	11.1	2250	**C222_11.1 S3 M3LA4**	130	**C222_11.1 P100 BN100LA4**	131
130	154	1.5	7.2	3810	**C322_7.2 S3 M3LC6**	134	**C322_7.2 P112 BN112M6**	135
131	152	1.0	7.1	2260	**C222_7.1 S3 M3LC6**	130	**C222_7.1 P112 BN112M6**	131
133	150	2.5	10.6	4320	**C362_10.6 S3 M3LA4**	138	**C362_10.6 P100 BN100LA4**	139
146	137	1.1	9.6	2250	**C222_9.6 S3 M3LA4**	130	**C222_9.6 P100 BN100LA4**	131
147	136	2.9	9.6	5050	**C412_9.6 S3 M3LA4**	142	**C412_9.6 P100 BN100LA4**	143
148	138	1.3	6.3	3510	**C322_6.3 S3 M3LC6**	134	**C322_6.3 P112 BN112M6**	135
152	132	1.7	9.3	3690	**C322_9.3 S3 M3LA4**	134	**C322_9.3 P100 BN100LA4**	135
160	125	3.1	8.8	4210	**C362_8.8 S3 M3LA4**	138	**C362_8.8 P100 BN100LA4**	139
163	123	1.1	8.7	2220	**C222_8.7 S3 M3LA4**	130	**C222_8.7 P100 BN100LA4**	131
163	125	1.4	5.7	3450	**C322_5.7 S3 M3LC6**	134	**C322_5.7 P112 BN112M6**	135
166	120	1.7	8.5	3600	**C322_8.5 S3 M3LA4**	134	**C322_8.5 P100 BN100LA4**	135
188	106	1.5	5.0	3410	**C322_5.0 S3 M3LC6**	134	**C322_5.0 P112 BN112M6**	135
197	101	2.0	7.2	3480	**C322_7.2 S3 M3LA4**	134	**C322_7.2 P100 BN100LA4**	135
199	100	1.3	7.1	2180	**C222_7.1 S3 M3LA4**	130	**C222_7.1 P100 BN100LA4**	131
225	89	1.7	6.3	3250	**C322_6.3 S3 M3LA4**	134	**C322_6.3 P100 BN100LA4**	135
232	86	1.2	6.1	2040	**C222_6.1 S3 M3LA4**	130	**C222_6.1 P100 BN100LA4**	131
241	83	2.4	5.8	3710	**C362_5.8 S3 M3LA4**	138	**C362_5.8 P100 BN100LA4**	139
249	80	1.9	5.7	3180	**C322_5.7 S3 M3LA4**	134	**C322_5.7 P100 BN100LA4**	135
252	79	1.3	5.6	2050	**C222_5.6 S3 M3LA4**	130	**C222_5.6 P100 BN100LA4**	131
267	75	2.7	5.3	3550	**C362_5.3 S3 M3LA4**	138	**C362_5.3 P100 BN100LA4**	139
285	70	2.2	5.0	3100	**C322_5.0 S3 M3LA4**	134	**C322_5.0 P100 BN100LA4**	135
296	68	1.5	4.8	1970	**C222_4.8 S3 M3LA4**	130	**C222_4.8 P100 BN100LA4**	131
302	66	2.7	9.3	3130	**C322_9.3 S3 M3SA2**	134	**C322_9.3 P90 BN90L2**	135
305	65	3.1	4.6	3490	**C362_4.6 S3 M3LA4**	138	**C362_4.6 P100 BN100LA4**	139
313	64	2.4	4.5	3000	**C322_4.5 S3 M3LA4**	134	**C322_4.5 P100 BN100LA4**	135
328	61	1.8	8.7	2000	**C222_8.7 S3 M3SA2**	130	**C222_8.7 P90 BN90L2**	131
331	60	1.6	4.3	1970	**C222_4.3 S3 M3LA4**	130	**C222_4.3 P100 BN100LA4**	131
335	60	2.8	8.5	3010	**C322_8.5 S3 M3SA2**	134	**C322_8.5 P90 BN90L2**	135
346	58	3.5	2.7	3380	**C362_2.7 S3 M3LC6**	138	**C362_2.7 P112 BN112M6**	139
369	54	0.8	7.6	930	**C122_7.6 S3 M3SA2**	126	**C122_7.6 P90 BN90L2**	127
377	53	2.8	3.7	2890	**C322_3.7 S3 M3LA4**	134	**C322_3.7 P100 BN100LA4**	135
380	52	1.7	3.7	1890	**C222_3.7 S3 M3LA4**	130	**C222_3.7 P100 BN100LA4**	131
392	51	3.1	7.2	2920	**C322_7.2 S3 M3SA2**	134	**C322_7.2 P90 BN90L2**	135
397	50	2.1	7.1	1920	**C222_7.1 S3 M3SA2**	130	**C222_7.1 P90 BN90L2**	131
414	48	2.9	3.4	2800	**C322_3.4 S3 M3LA4**	134	**C322_3.4 P100 BN100LA4**	135
424	47	1.8	3.3	1890	**C222_3.3 S3 M3LA4**	130	**C222_3.3 P100 BN100LA4**	131
440	45	0.9	3.2	580	**C122_3.2 S3 M3LA4**	126	**C122_3.2 P100 BN100LA4**	127
449	44	3.4	6.3	2760	**C322_6.3 S3 M3SA2**	134	**C322_6.3 P90 BN90L2**	135
462	43	2.0	6.1	1820	**C222_6.1 S3 M3SA2**	130	**C222_6.1 P90 BN90L2**	131
663	30	2.1	5.6	1770	**C222_5.6 S3 M3SA2**	130	**C222_5.6 P90 BN90L2**	131

2.2 kW

n_2 min⁻¹	M_2 Nm	S	i	R_{n2} N			IEC	
490	41	3.2	2.9	2700	**C322_2.9 S3 M3LA4**	134	**C322_2.9 P100 BN100LA4**	135
510	39	0.9	2.8	690	**C122_2.8 S3 M3LA4**	126	**C122_2.8 P100 BN100LA4**	127
518	39	2.1	2.7	1770	**C222_2.7 S3 M3LA4**	130	**C222_2.7 P100 BN100LA4**	131
589	34	2.4	4.8	1720	**C222_4.8 S3 M3SA2**	130	**C222_4.8 P90 BN90L2**	131
663	30	2.5	4.3	1670	**C222_4.3 S3 M3SA2**	130	**C222_4.3 P90 BN90L2**	131
758	26	2.7	3.7	1620	**C222_3.7 S3 M3SA2**	130	**C222_3.7 P90 BN90L2**	131
770	26	1.3	3.7	970	**C122_3.7 S3 M3SA2**	126	**C122_3.7 P90 BN90L2**	127
864	23	2.9	3.3	1550	**C222_3.3 S3 M3SA2**	130	**C222_3.3 P90 BN90L2**	131
891	22	1.4	3.2	940	**C122_3.2 S3 M3SA2**	126	**C122_3.2 P90 BN90L2**	127
1015	20	1.5	2.8	920	**C122_2.8 S3 M3SA2**	126	**C122_2.8 P90 BN90L2**	127
1032	19	3.4	2.7	1490	**C222_2.7 S3 M3SA2**	130	**C222_2.7 P90 BN90L2**	131

3 kW

n_2 min⁻¹	M_2 Nm	S	i	R_{n2} N			IEC	
2.0	13319	0.9	720.3	85000	**C1004_720.3 S3 M3LB4**	163	**C1004_720.3 P100 BN100LB4**	164
2.4	10773	1.1	582.6	85000	**C1004_582.6 S3 M3LB4**	163	**C1004_582.6 P100 BN100LB4**	164
3.4	7747	0.9	419.0	60000	**C904_419.0 S3 M3LB4**	160	**C904_419.0 P100 BN100LB4**	161
3.4	7577	1.6	409.8	85000	**C1004_409.8 S3 M3LB4**	163	**C1004_409.8 P100 BN100LB4**	164
4.2	6268	1.1	339.0	60000	**C904_339.0 S3 M3LB4**	160	**C904_339.0 P100 BN100LB4**	161
4.4	5984	2.0	323.6	85000	**C1004_323.6 S3 M3LB4**	163	**C1004_323.6 P100 BN100LB4**	164
5.3	4965	1.5	268.5	60000	**C904_268.5 S3 M3LB4**	160	**C904_268.5 P100 BN100LB4**	161
5.4	4863	2.5	263.0	85000	**C1004_263.0 S3 M3LB4**	163	**C1004_263.0 P100 BN100LB4**	164
6.5	4079	1.0	215.8	35000	**C803_215.8 S3 M3LB4**	157	**C803_215.8 P100 BN100LB4**	158
6.6	3927	1.8	212.4	60000	**C904_212.4 S3 M3LB4**	160	**C904_212.4 P100 BN100LB4**	161
7.1	3739	1.0	197.9	35000	**C803_197.9 S3 M3LB4**	157	**C803_197.9 P100 BN100LB4**	158
8.2	3252	2.2	172.1	60000	**C903_172.1 S3 M3LB4**	160	**C903_172.1 P100 BN100LB4**	161
8.3	3193	1.3	169.0	35000	**C803_169.0 S3 M3LB4**	157	**C803_169.0 P100 BN100LB4**	158
9.5	2818	1.4	149.1	35000	**C803_149.1 S3 M3LB4**	157	**C803_149.1 P100 BN100LB4**	158
9.6	2765	2.6	146.3	60000	**C903_146.3 S3 M3LB4**	160	**C903_146.3 P100 BN100LB4**	161
10.5	2535	2.8	134.1	60000	**C903_134.1 S3 M3LB4**	160	**C903_134.1 P100 BN100LB4**	161
12.1	2206	3.3	116.7	60000	**C903_116.7 S3 M3LB4**	160	**C903_116.7 P100 BN100LB4**	161
12.5	2125	1.1	112.4	25000	**C703_112.4 S3 M3LB4**	154	**C703_112.4 P100 BN100LB4**	155
12.9	2069	1.9	109.5	35000	**C803_109.5 S3 M3LB4**	157	**C803_109.5 P100 BN100LB4**	158
13.6	1961	1.2	103.8	25000	**C703_103.8 S3 M3LB4**	154	**C703_103.8 P100 BN100LB4**	155
14.5	1840	2.2	97.4	35000	**C803_97.4 S3 M3LB4**	157	**C803_97.4 P100 BN100LB4**	158
15.5	1720	0.9	91.0	16000	**C613_91.0 S3 M3LB4**	150	**C613_91.0 P100 BN100LB4**	151
15.8	1687	2.4	89.3	35000	**C803_89.3 S3 M3LB4**	157	**C803_89.3 P100 BN100LB4**	158
16.0	1667	1.4	88.2	25000	**C703_88.2 S3 M3LB4**	154	**C703_88.2 P100 BN100LB4**	155
17.0	1569	1.0	83.0	16000	**C613_83.0 S3 M3LB4**	150	**C613_83.0 P100 BN100LB4**	151
17.3	1538	1.5	81.4	25000	**C703_81.4 S3 M3LB4**	154	**C703_81.4 P100 BN100LB4**	155
18.3	1453	2.8	76.9	35000	**C803_76.9 S3 M3LB4**	157	**C803_76.9 P100 BN100LB4**	158
19.0	1402	1.1	74.2	16000	**C613_74.2 S3 M3LB4**	150	**C613_74.2 P100 BN100LB4**	151
19.8	1348	1.7	71.3	25000	**C703_71.3 S3 M3LB4**	154	**C703_71.3 P100 BN100LB4**	155
20.0	1332	3.0	70.5	35000	**C803_70.5 S3 M3LB4**	157	**C803_70.5 P100 BN100LB4**	158
20.8	1279	1.3	67.7	16000	**C613_67.7 S3 M3LB4**	150	**C613_67.7 P100 BN100LB4**	151
24.1	1107	1.4	58.6	16000	**C613_58.6 S3 M3LB4**	150	**C613_58.6 P100 BN100LB4**	151
25.0	1068	2.2	56.5	25000	**C703_56.5 S3 M3LB4**	154	**C703_56.5 P100 BN100LB4**	155

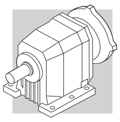

3 kW

n_2 min⁻¹	M_2 Nm	S	i	R_{n2} N	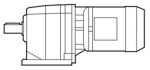		IEC 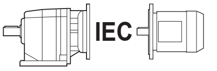	
26.4	1010	1.6	53.5	16000	**C613_53.5 S3 M3LB4**	150	**C613_53.5 P100 BN100LB4**	151
27.6	967	1.0	51.2	10000	**C513_51.2 S3 M3LB4**	146	**C513_51.2 P100 BN100LB4**	147
29.6	900	1.8	47.6	16000	**C613_47.6 S3 M3LB4**	150	**C613_47.6 P100 BN100LB4**	151
30	883	1.1	46.7	10000	**C513_46.7 S3 M3LB4**	146	**C513_46.7 P100 BN100LB4**	147
32	845	2.7	44.7	25000	**C703_44.7 S3 M3LB4**	154	**C703_44.7 P100 BN100LB4**	155
32	821	1.9	43.4	16000	**C613_43.4 S3 M3LB4**	150	**C613_43.4 P100 BN100LB4**	151
33	832	0.9	43.1	10000	**C512_43.1 S3 M3LB4**	146	**C512_43.1 P100 BN100LB4**	147
34	780	2.9	41.3	25000	**C703_41.3 S3 M3LB4**	154	**C703_41.3 P100 BN100LB4**	155
35	765	1.3	40.5	10000	**C513_40.5 S3 M3LB4**	146	**C513_40.5 P100 BN100LB4**	147
35	779	1.0	40.4	10000	**C512_40.4 S3 M3LB4**	146	**C512_40.4 P100 BN100LB4**	147
37	734	1.8	38.0	16000	**C612_38.0 S3 M3LB4**	150	**C612_38.0 P100 BN100LB4**	151
38	698	1.4	37.0	10000	**C513_37.0 S3 M3LB4**	146	**C513_37.0 P100 BN100LB4**	147
39	702	1.1	36.4	10000	**C512_36.4 S3 M3LB4**	146	**C512_36.4 P100 BN100LB4**	147
39	683	2.3	36.1	16000	**C613_36.1 S3 M3LB4**	150	**C613_36.1 P100 BN100LB4**	151
41	661	1.9	34.2	16000	**C612_34.2 S3 M3LB4**	150	**C612_34.2 P100 BN100LB4**	151
43	638	1.2	33.0	10000	**C512_33.0 S3 M3LB4**	146	**C512_33.0 P100 BN100LB4**	147
43	623	2.4	33.0	16000	**C613_33.0 S3 M3LB4**	150	**C613_33.0 P100 BN100LB4**	151
45	590	1.0	31.2	5550	**C413_31.2 S3 M3LB4**	142	**C413_31.2 P100 BN100LB4**	143
46	588	2.3	30.4	15900	**C612_30.4 S3 M3LB4**	150	**C612_30.4 P100 BN100LB4**	151
47	575	1.4	29.8	10000	**C512_29.8 S3 M3LB4**	146	**C512_29.8 P100 BN100LB4**	147
50	546	0.9	28.3	5460	**C412_28.3 S3 M3LB4**	142	**C412_28.3 P100 BN100LB4**	143
51	519	1.9	27.4	10000	**C513_27.4 S3 M3LB4**	146	**C513_27.4 P100 BN100LB4**	147
51	529	2.6	27.4	15400	**C612_27.4 S3 M3LB4**	150	**C612_27.4 P100 BN100LB4**	151
54	500	1.6	25.9	10000	**C512_25.9 S3 M3LB4**	146	**C512_25.9 P100 BN100LB4**	147
54	487	0.9	26.2	4500	**C363_26.2 S3 M3LB4**	138	**C363_26.2 P100 BN100LB4**	139
56	483	1.0	25.0	5480	**C412_25.0 S3 M3LB4**	142	**C412_25.0 P100 BN100LB4**	143
57	479	2.8	24.8	15100	**C612_24.8 S3 M3LB4**	150	**C612_24.8 P100 BN100LB4**	151
59	451	2.0	23.9	10000	**C513_23.9 S3 M3LB4**	146	**C513_23.9 P100 BN100LB4**	147
60	451	1.8	23.4	10000	**C512_23.4 S3 M3LB4**	146	**C512_23.4 P100 BN100LB4**	147
63	435	1.1	22.6	5420	**C412_22.6 S3 M3LB4**	142	**C412_22.6 P100 BN100LB4**	143
63	431	3.1	22.4	14600	**C612_22.4 S3 M3LB4**	150	**C612_22.4 P100 BN100LB4**	151
64	412	1.0	22.1	4530	**C363_22.1 S3 M3LB4**	138	**C363_22.1 P100 BN100LB4**	139
65	412	2.2	21.8	10000	**C513_21.8 S3 M3LB4**	146	**C513_21.8 P100 BN100LB4**	147
67	405	2.0	21.0	10000	**C512_21.0 S3 M3LB4**	146	**C512_21.0 P100 BN100LB4**	147
71	381	1.3	19.8	5390	**C412_19.8 S3 M3LB4**	142	**C412_19.8 P100 BN100LB4**	143
74	361	1.1	19.0	4450	**C362_19.0 S3 M3LB4**	138	**C362_19.0 P100 BN100LB4**	139
75	365	2.2	18.9	10000	**C512_18.9 S3 M3LB4**	146	**C512_18.9 P100 BN100LB4**	147
79	343	1.4	17.8	5300	**C412_17.8 S3 M3LB4**	142	**C412_17.8 P100 BN100LB4**	143
82	327	1.2	17.2	4400	**C362_17.2 S3 M3LB4**	138	**C362_17.2 P100 BN100LB4**	139
85	320	2.5	16.6	9790	**C512_16.6 S3 M3LB4**	146	**C512_16.6 P100 BN100LB4**	147
89	305	1.5	15.8	5240	**C412_15.8 S3 M3LB4**	142	**C412_15.8 P100 BN100LB4**	143
90	296	0.9	15.6	3680	**C322_15.6 S3 M3LB4**	134	**C322_15.6 P100 BN100LB4**	135
94	289	2.8	15.0	9540	**C512_15.0 S3 M3LB4**	146	**C512_15.0 P100 BN100LB4**	147
96	280	1.4	14.8	4340	**C362_14.8 S3 M3LB4**	138	**C362_14.8 P100 BN100LB4**	139
99	275	1.6	14.2	5140	**C412_14.2 S3 M3LB4**	142	**C412_14.2 P100 BN100LB4**	143
100	267	0.9	14.1	3650	**C322_14.1 S3 M3LB4**	134	**C322_14.1 P100 BN100LB4**	135
106	253	1.5	13.3	4260	**C362_13.3 S3 M3LB4**	138	**C362_13.3 P100 BN100LB4**	139
107	253	3.0	13.1	9200	**C512_13.1 S3 M3LB4**	146	**C512_13.1 P100 BN100LB4**	147
114	239	1.8	12.4	5040	**C412_12.4 S3 M3LB4**	142	**C412_12.4 P100 BN100LB4**	143
114	234	1.0	12.3	3580	**C322_12.3 S3 M3LB4**	134	**C322_12.3 P100 BN100LB4**	135
119	228	3.4	11.8	8950	**C512_11.8 S3 M3LB4**	146	**C512_11.8 P100 BN100LB4**	147

3 kW

n₂ min⁻¹	M₂ Nm	S	i	Rn2 N	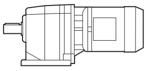			
121	222	1.7	11.7	4200	**C362_11.7 S3 M3LB4**	138	**C362_11.7 P100 BN100LB4**	139
126	215	1.9	11.2	4930	**C412_11.2 S3 M3LB4**	142	**C412_11.2 P100 BN100LB4**	143
126	213	1.1	11.2	3520	**C322_11.2 S3 M3LB4**	134	**C322_11.2 P100 BN100LB4**	135
133	201	1.9	10.6	4100	**C362_10.6 S3 M3LB4**	138	**C362_10.6 P100 BN100LB4**	139
142	191	1.2	20.1	3480	**C322_20.1 S3 M3LA2**	134	**C322_20.1 P100 BN100L2**	135
147	185	2.1	9.6	4800	**C412_9.6 S3 M3LB4**	142	**C412_9.6 P100 BN100LB4**	143
152	177	1.2	9.3	3450	**C322_9.3 S3 M3LB4**	134	**C322_9.3 P100 BN100LB4**	135
157	173	1.3	18.2	3410	**C322_18.2 S3 M3LA2**	134	**C322_18.2 P100 BN100L2**	135
160	167	2.3	8.8	3990	**C362_8.8 S3 M3LB4**	138	**C362_8.8 P100 BN100LB4**	139
166	161	1.3	8.5	3400	**C322_8.5 S3 M3LB4**	134	**C322_8.5 P100 BN100LB4**	135
176	153	2.4	8.0	3840	**C362_8.0 S3 M3LB4**	138	**C362_8.0 P100 BN100LB4**	139
181	151	0.9	15.8	1940	**C222_15.8 S3 M3LA2**	130	**C222_15.8 P100 BN100L2**	131
183	148	1.4	15.6	3340	**C322_15.6 S3 M3LA2**	134	**C322_15.6 P100 BN100L2**	135
197	136	1.5	7.2	3300	**C322_7.2 S3 M3LB4**	134	**C322_7.2 P100 BN100LB4**	135
199	135	1.0	7.1	1940	**C222_7.1 S3 M3LB4**	130	**C222_7.1 P100 BN100LB4**	131
200	136	2.6	7.1	4490	**C412_7.1 S3 M3LB4**	142	**C412_7.1 P100 BN100LB4**	143
203	134	1.5	14.1	3250	**C322_14.1 S3 M3LA2**	134	**C322_14.1 P100 BN100L2**	135
208	129	2.8	6.8	3780	**C362_6.8 S3 M3LB4**	138	**C362_6.8 P100 BN100LB4**	139
222	123	2.8	6.4	4370	**C412_6.4 S3 M3LB4**	142	**C412_6.4 P100 BN100LB4**	143
225	119	1.3	6.3	3100	**C322_6.3 S3 M3LB4**	134	**C322_6.3 P100 BN100LB4**	135
232	117	1.7	12.3	3190	**C322_12.3 S3 M3LA2**	134	**C322_12.3 P100 BN100L2**	135
232	116	0.9	6.1	1600	**C222_6.1 S3 M3LB4**	130	**C222_6.1 P100 BN100LB4**	131
237	115	2.3	6.0	4090	**C412_6.0 S3 M3LB4**	142	**C412_6.0 P100 BN100LB4**	143
241	111	1.8	5.8	3530	**C362_5.8 S3 M3LB4**	138	**C362_5.8 P100 BN100LB4**	139
249	107	1.4	5.7	3040	**C322_5.7 S3 M3LB4**	134	**C322_5.7 P100 BN100LB4**	135
252	106	1.0	5.6	1750	**C222_5.6 S3 M3LB4**	130	**C222_5.6 P100 BN100LB4**	131
258	105	1.1	11.1	1850	**C222_11.1 S3 M3LA2**	130	**C222_11.1 P100 BN100L2**	131
255	106	1.8	11.2	3090	**C322_11.2 S3 M3LA2**	134	**C322_11.2 P100 BN100L2**	135
267	100	2.0	5.3	3380	**C362_5.3 S3 M3LB4**	138	**C362_5.3 P100 BN100LB4**	139
285	94	1.6	5.0	2950	**C322_5.0 S3 M3LB4**	134	**C322_5.0 P100 BN100LB4**	135
296	91	1.1	4.8	1780	**C222_4.8 S3 M3LB4**	130	**C222_4.8 P100 BN100LB4**	131
298	91	1.3	9.6	1880	**C222_9.6 S3 M3LA2**	130	**C222_9.6 P100 BN100L2**	131
302	90	2.9	4.7	3880	**C412_4.7 S3 M3LB4**	142	**C412_4.7 P100 BN100LB4**	143
305	88	2.3	4.6	3270	**C362_4.6 S3 M3LB4**	138	**C362_4.6 P100 BN100LB4**	139
308	88	2.0	9.3	2990	**C322_9.3 S3 M3LA2**	134	**C322_9.3 P100 BN100L2**	135
313	85	1.8	4.5	2880	**C322_4.5 S3 M3LB4**	134	**C322_4.5 P100 BN100LB4**	135
329	83	1.3	8.7	1840	**C222_8.7 S3 M3LA2**	130	**C222_8.7 P100 BN100L2**	131
331	81	1.2	4.3	1800	**C222_4.3 S3 M3LB4**	130	**C222_4.3 P100 BN100LB4**	131
336	80	2.5	4.2	3190	**C362_4.2 S3 M3LB4**	138	**C362_4.2 P100 BN100LB4**	139
336	81	2.1	8.5	2900	**C322_8.5 S3 M3LA2**	134	**C322_8.5 P100 BN100L2**	135
377	71	2.1	3.7	2780	**C322_3.7 S3 M3LB4**	134	**C322_3.7 P100 BN100LB4**	135
380	70	1.3	3.7	1740	**C222_3.7 S3 M3LB4**	130	**C222_3.7 P100 BN100LB4**	131
399	68	2.3	7.2	2810	**C322_7.2 S3 M3LA2**	134	**C322_7.2 P100 BN100L2**	135
404	66	3.0	3.5	3130	**C362_3.5 S3 M3LB4**	138	**C362_3.5 P100 BN100LB4**	139
404	67	1.6	7.1	1800	**C222_7.1 S3 M3LA2**	130	**C222_7.1 P100 BN100L2**	131
414	65	2.1	3.4	2690	**C322_3.4 S3 M3LB4**	134	**C322_3.4 P100 BN100LB4**	135
424	63	1.3	3.3	1740	**C222_3.3 S3 M3LB4**	130	**C222_3.3 P100 BN100LB4**	131
457	60	2.5	6.3	2650	**C322_6.3 S3 M3LA2**	134	**C322_6.3 P100 BN100L2**	135
470	58	1.5	6.1	1690	**C222_6.1 S3 M3LA2**	130	**C222_6.1 P100 BN100L2**	131
490	55	2.4	2.9	2610	**C322_2.9 S3 M3LB4**	134	**C322_2.9 P100 BN100LB4**	135
502	54	2.6	5.7	2570	**C322_5.7 S3 M3LA2**	134	**C322_5.7 P100 BN100L2**	135

3 kW

n_2 min⁻¹	M_2 Nm	S	i	R_{n2} N	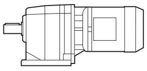			
511	53	1.5	5.6	1650	**C222_5.6 S3 M3LA2**	130	**C222_5.6 P100 BN100L2**	131
518	52	1.5	2.7	1660	**C222_2.7 S3 M3LB4**	130	**C222_2.7 P100 BN100LB4**	131
578	47	2.9	5.0	2500	**C322_5.0 S3 M3LA2**	134	**C322_5.0 P100 BN100L2**	135
636	54	2.4	4.5	2400	**C322_4.5 S3 M3LA2**	134	**C322_4.5 P100 BN100L2**	135
600	45	1.8	4.8	1620	**C222_4.8 S3 M3LA2**	130	**C222_4.8 P100 BN100L2**	131
665	41	1.8	4.3	1580	**C222_4.3 S3 M3LA2**	130	**C222_4.3 P100 BN100L2**	131
766	36	3.4	3.7	2320	**C322_3.7 S3 M3LA2**	134	**C322_3.7 P100 BN100L2**	135
771	35	2.0	3.7	1540	**C222_3.7 S3 M3LA2**	130	**C222_3.7 P100 BN100L2**	131
783	35	1.0	3.7	560	**C122_3.7 S3 M3LA2**	126	**C122_3.7 P100 BN100L2**	127
867	83	2.2	3.3	1480	**C222_3.3 S3 M3LA2**	130	**C222_3.3 P100 BN100L2**	131
894	30	1.1	3.2	630	**C122_3.2 S3 M3LA2**	126	**C122_3.2 P100 BN100L2**	127
1033	26	1.1	2.8	750	**C122_2.8 S3 M3LA2**	126	**C122_2.8 P100 BN100L2**	127
1051	26	2.5	2.7	1430	**C222_2.7 S3 M3LA2**	130	**C222_2.7 P100 BN100L2**	131

4 kW

n_2 min⁻¹	M_2 Nm	S	i	R_{n2} N	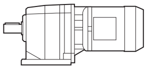			
2.8	12569	1.0	502.6	85000	**C1004_502.6 S3 M3LC4**	163	**C1004_502.6 P112 BN112M4**	164
3.4	10249	1.2	409.8	85000	**C1004_409.8 S3 M3LC4**	163	**C1004_409.8 P112 BN112M4**	164
4.3	8093	1.5	323.6	85000	**C1004_323.6 S3 M3LC4**	163	**C1004_323.6 P112 BN112M4**	164
4.7	7325	1.0	292.9	60000	**C904_292.9 S3 M3LC4**	160	**C904_292.9 P112 BN112M4**	161
5.2	6715	1.1	268.5	60000	**C904_268.5 S3 M3LC4**	160	**C904_268.5 P112 BN112M4**	161
5.7	6107	2.0	244.2	85000	**C1004_244.2 S3 M3LC4**	163	**C1004_244.2 P112 BN112M4**	164
6.0	5795	1.2	231.7	60000	**C904_231.7 S3 M3LC4**	160	**C904_231.7 P112 BN112M4**	161
7.5	4637	2.6	185.4	85000	**C1004_185.4 S3 M3LC4**	163	**C1004_185.4 P112 BN112M4**	164
8.1	4399	1.6	172.1	60000	**C903_172.1 S3 M3LC4**	160	**C903_172.1 P112 BN112M4**	161
8.2	4319	0.9	169.0	35000	**C803_169.0 S3 M3LC4**	157	**C803_169.0 P112 BN112M4**	158
10.2	3493	1.1	136.7	35000	**C803_136.7 S3 M3LC4**	157	**C803_136.7 P112 BN112M4**	158
10.4	3428	2.1	134.1	60000	**C903_134.1 S3 M3LC4**	160	**C903_134.1 P112 BN112M4**	161
11.9	2983	2.4	116.7	60000	**C903_116.7 S3 M3LC4**	160	**C903_116.7 P112 BN112M4**	161
12.7	2799	1.4	109.5	35000	**C803_109.5 S3 M3LC4**	157	**C803_109.5 P112 BN112M4**	158
14.3	2489	1.6	97.4	35000	**C803_97.4 S3 M3LC4**	157	**C803_97.4 P112 BN112M4**	158
14.4	2460	2.9	96.2	60000	**C903_96.2 S3 M3LC4**	160	**C903_96.2 P112 BN112M4**	161
15.6	2282	1.8	89.3	35000	**C803_89.3 S3 M3LC4**	157	**C803_89.3 P112 BN112M4**	158
15.8	2254	1.0	88.2	25000	**C703_88.2 S3 M3LC4**	154	**C703_88.2 P112 BN112M4**	155
17.1	2081	1.1	81.4	25000	**C703_81.4 S3 M3LC4**	154	**C703_81.4 P112 BN112M4**	155
19.5	1823	1.3	71.3	25000	**C703_71.3 S3 M3LC4**	154	**C703_71.3 P112 BN112M4**	155
19.7	1802	2.2	70.5	35000	**C803_70.5 S3 M3LC4**	157	**C803_70.5 P112 BN112M4**	158
20.5	1730	0.9	67.7	16000	**C613_67.7 S3 M3LC4**	150	**C613_67.7 P112 BN112M4**	151
23.7	1498	1.1	58.6	16000	**C613_58.6 S3 M3LC4**	150	**C613_58.6 P112 BN112M4**	151
24.3	1464	2.7	57.3	35000	**C803_57.3 S3 M3LC4**	157	**C803_57.3 P112 BN112M4**	158
24.6	1444	1.6	56.5	25000	**C703_56.5 S3 M3LC4**	154	**C703_56.5 P112 BN112M4**	155
26.0	1366	1.2	53.5	16000	**C613_53.5 S3 M3LC4**	150	**C613_53.5 P112 BN112M4**	151
26.6	1333	1.7	52.2	25000	**C703_52.2 S3 M3LC4**	154	**C703_52.2 P112 BN112M4**	155
29.2	1217	1.3	47.6	16000	**C613_47.6 S3 M3LC4**	150	**C613_47.6 P112 BN112M4**	151
29.3	1213	3.1	47.4	35000	**C803_47.4 S3 M3LC4**	157	**C803_47.4 P112 BN112M4**	158
31	1142	2.0	44.7	25000	**C703_44.7 S3 M3LC4**	154	**C703_44.7 P112 BN112M4**	155
32	1112	3.4	43.5	35000	**C803_43.5 S3 M3LC4**	157	**C803_43.5 P112 BN112M4**	158

4 kW

n_2 min⁻¹	M_2 Nm	S	i	R_{n2} N	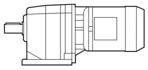		IEC	
32	1110	1.4	43.4	16000	**C613_43.4 S3 M3LC4**	150	**C613_43.4 P112 BN112M4**	151
34	1055	2.2	41.3	25000	**C703_41.3 S3 M3LC4**	154	**C703_41.3 P112 BN112M4**	155
34	1035	1.0	40.5	10000	**C513_40.5 S3 M3LC4**	146	**C513_40.5 P112 BN112M4**	147
37	992	1.4	38.0	16000	**C612_38.0 S3 M3LC4**	150	**C612_38.0 P112 BN112M4**	151
38	945	1.1	37.0	10000	**C513_37.0 S3 M3LC4**	146	**C513_37.0 P112 BN112M4**	147
40	907	2.3	34.7	23400	**C702_34.7 S3 M3LC4**	154	**C702_34.7 P112 BN112M4**	155
41	893	1.4	34.2	15700	**C612_34.2 S3 M3LC4**	150	**C612_34.2 P112 BN112M4**	151
42	862	0.9	33.0	10000	**C512_33.0 S3 M3LC4**	146	**C512_33.0 P112 BN112M4**	147
46	795	1.7	30.4	15300	**C612_30.4 S3 M3LC4**	150	**C612_30.4 P112 BN112M4**	151
47	777	1.0	29.8	10000	**C512_29.8 S3 M3LC4**	146	**C512_29.8 P112 BN112M4**	147
50	724	2.9	27.7	22300	**C702_27.7 S3 M3LC4**	154	**C702_27.7 P112 BN112M4**	155
51	716	1.9	27.4	14900	**C612_27.4 S3 M3LC4**	150	**C612_27.4 P112 BN112M4**	151
54	676	1.2	25.9	10000	**C512_25.9 S3 M3LC4**	146	**C512_25.9 P112 BN112M4**	147
56	648	2.1	24.8	14600	**C612_24.8 S3 M3LC4**	150	**C612_24.8 P112 BN112M4**	151
60	610	1.3	23.4	10000	**C512_23.4 S3 M3LC4**	146	**C512_23.4 P112 BN112M4**	147
62	584	2.3	22.4	14200	**C612_22.4 S3 M3LC4**	150	**C612_22.4 P112 BN112M4**	151
66	547	1.5	21.0	9920	**C512_21.0 S3 M3LC4**	146	**C512_21.0 P112 BN112M4**	147
70	516	0.9	19.8	4760	**C412_19.8 S3 M3LC4**	142	**C412_19.8 P112 BN112M4**	143
71	512	2.6	19.6	13800	**C612_19.6 S3 M3LC4**	150	**C612_19.6 P112 BN112M4**	151
74	493	1.6	18.9	9730	**C512_18.9 S3 M3LC4**	146	**C512_18.9 P112 BN112M4**	147
78	465	1.0	17.8	4720	**C412_17.8 S3 M3LC4**	142	**C412_17.8 P112 BN112M4**	143
79	461	2.9	17.7	13400	**C612_17.7 S3 M3LC4**	150	**C612_17.7 P112 BN112M4**	151
84	433	1.8	16.6	9440	**C512_16.6 S3 M3LC4**	146	**C512_16.6 P112 BN112M4**	147
87	416	3.2	15.9	13100	**C612_15.9 S3 M3LC4**	150	**C612_15.9 P112 BN112M4**	151
88	413	1.1	15.8	4740	**C412_15.8 S3 M3LC4**	142	**C412_15.8 P112 BN112M4**	143
93	391	2.0	15.0	9230	**C512_15.0 S3 M3LC4**	146	**C512_15.0 P112 BN112M4**	147
95	378	1.0	14.8	3880	**C362_14.8 S3 M3LC4**	138	**C362_14.8 P112 BN112M4**	139
98	372	1.2	14.2	4690	**C412_14.2 S3 M3LC4**	142	**C412_14.2 P112 BN112M4**	143
105	342	1.1	13.3	3840	**C362_13.3 S3 M3LC4**	138	**C362_13.3 P112 BN112M4**	139
106	343	2.2	13.1	8930	**C512_13.1 S3 M3LC4**	146	**C512_13.1 P112 BN112M4**	147
112	324	1.3	12.4	4660	**C412_12.4 S3 M3LC4**	142	**C412_12.4 P112 BN112M4**	143
117	309	2.5	11.8	8720	**C512_11.8 S3 M3LC4**	146	**C512_11.8 P112 BN112M4**	147
120	299	1.3	11.7	3840	**C362_11.7 S3 M3LC4**	138	**C362_11.7 P112 BN112M4**	139
125	291	1.4	11.2	4580	**C412_11.2 S3 M3LC4**	142	**C412_11.2 P112 BN112M4**	143
132	272	1.4	10.6	3780	**C362_10.6 S3 M3LC4**	138	**C362_10.6 P112 BN112M4**	139
143	255	2.7	9.8	8290	**C512_9.8 S3 M3LC4**	146	**C512_9.8 P112 BN112M4**	147
145	251	1.6	9.6	4510	**C412_9.6 S3 M3LC4**	142	**C412_9.6 P112 BN112M4**	143
151	238	0.9	9.3	3150	**C322_9.3 S3 M3LC4**	134	**C322_9.3 P112 BN112M4**	135
158	229	3.0	8.8	8070	**C512_8.8 S3 M3LC4**	146	**C512_8.8 P112 BN112M4**	147
159	226	1.7	8.8	3720	**C362_8.8 S3 M3LC4**	138	**C362_8.8 P112 BN112M4**	139
161	226	1.7	8.6	4420	**C412_8.6 S3 M3LC4**	142	**C412_8.6 P112 BN112M4**	143
165	218	1.0	8.5	3110	**C322_8.5 S3 M3LC4**	134	**C322_8.5 P112 BN112M4**	135
174	206	1.8	8.0	3650	**C362_8.0 S3 M3LC4**	138	**C362_8.0 P112 BN112M4**	139
179	202	3.2	7.8	7800	**C512_7.8 S3 M3LC4**	146	**C512_7.8 P112 BN112M4**	147
184	197	1.1	15.6	3090	**C322_15.6 S3 M3LB2**	134	**C322_15.6 P112 BN112M2**	135
195	184	1.1	7.2	3070	**C322_7.2 S3 M3LC4**	134	**C322_7.2 P112 BN112M4**	135
197	184	1.9	7.1	4280	**C412_7.1 S3 M3LC4**	142	**C412_7.1 P112 BN112M4**	143
199	182	3.5	7.0	7580	**C512_7.0 S3 M3LC4**	146	**C512_7.0 P112 BN112M4**	147
204	178	1.2	14.1	3040	**C322_14.1 S3 M3LB2**	134	**C322_14.1 P112 BN112M2**	135
206	174	2.0	6.8	3580	**C362_6.8 S3 M3LC4**	138	**C362_6.8 P112 BN112M4**	139
218	166	2.1	6.4	4180	**C412_6.4 S3 M3LC4**	142	**C412_6.4 P112 BN112M4**	143

4 kW

n_2 min-1	M_2 Nm	S	i	R_{n2} N	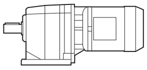		IEC	
223	161	1.0	6.3	2840	**C322_6.3 S3 M3LC4**	134	**C322_6.3 P112 BN112M4**	135
233	156	1.3	12.3	2990	**C322_12.3 S3 M3LB2**	134	**C322_12.3 P112 BN112M2**	135
234	155	1.7	6.0	3840	**C412_6.0 S3 M3LC4**	142	**C412_6.0 P112 BN112M4**	143
239	150	1.3	5.8	3310	**C362_5.8 S3 M3LC4**	138	**C362_5.8 P112 BN112M4**	139
248	145	1.1	5.7	2780	**C322_5.7 S3 M3LC4**	134	**C322_5.7 P112 BN112M4**	135
256	142	1.3	11.2	2900	**C322_11.2 S3 M3LB2**	134	**C322_11.2 P112 BN112M2**	135
265	135	1.5	5.3	3200	**C362_5.3 S3 M3LC4**	138	**C362_5.3 P112 BN112M4**	139
283	127	1.2	5.0	2760	**C322_5.0 S3 M3LC4**	134	**C322_5.0 P112 BN112M4**	135
298	122	0.9	9.6	1680	**C222_9.6 S3 M3LB2**	130	**C222_9.6 P112 BN112M2**	131
303	119	1.7	4.6	3180	**C362_4.6 S3 M3LC4**	138	**C362_4.6 P112 BN112M4**	139
309	118	1.5	9.3	2840	**C322_9.3 S3 M3LB2**	134	**C322_9.3 P112 BN112M2**	135
311	115	1.3	4.5	2690	**C322_4.5 S3 M3LC4**	134	**C322_4.5 P112 BN112M4**	135
330	110	1.0	8.7	1660	**C222_8.7 S3 M3LB2**	130	**C222_8.7 P112 BN112M2**	131
333	108	1.9	4.2	3060	**C362_4.2 S3 M3LC4**	138	**C362_4.2 P112 BN112M4**	139
336	109	0.9	4.3	1300	**C222_4.3 S3 M3LC4**	130	**C222_4.3 P112 BN112M4**	131
338	107	1.6	8.5	2750	**C322_8.5 S3 M3LB2**	134	**C322_8.5 P112 BN112M2**	135
375	96	1.6	3.7	2640	**C322_3.7 S3 M3LC4**	134	**C322_3.7 P112 BN112M4**	135
378	95	0.9	3.7	1560	**C222_3.7 S3 M3LC4**	130	**C222_3.7 P112 BN112M4**	131
401	91	1.8	7.2	2690	**C322_7.2 S3 M3LB2**	134	**C322_7.2 P112 BN112M2**	135
402	89	2.2	3.5	3010	**C362_3.5 S3 M3LC4**	138	**C362_3.5 P112 BN112M4**	139
405	90	1.2	7.1	1650	**C222_7.1 S3 M3LB2**	130	**C222_7.1 P112 BN112M2**	131
411	87	1.6	3.4	2580	**C322_3.4 S3 M3LC4**	134	**C322_3.4 P112 BN112M4**	135
421	85	1.0	3.3	1540	**C222_3.3 S3 M3LC4**	130	**C222_3.3 P112 BN112M4**	131
440	82	2.5	3.2	2890	**C362_3.2 S3 M3LC4**	138	**C362_3.2 P112 BN112M4**	139
458	79	1.9	6.3	2530	**C322_6.3 S3 M3LB2**	134	**C322_6.3 P112 BN112M2**	135
471	77	1.1	6.1	1540	**C222_6.1 S3 M3LB2**	130	**C222_6.1 P112 BN112M2**	131
486	74	1.8	2.9	2500	**C322_2.9 S3 M3LC4**	134	**C322_2.9 P112 BN112M4**	135
513	54	1.5	5.6	1520	**C222_5.6 S3 M3LB2**	130	**C222_5.6 P112 BN112M2**	131
514	70	1.1	2.7	1530	**C222_2.7 S3 M3LC4**	130	**C222_2.7 P112 BN112M4**	131
521	69	2.9	2.7	2840	**C362_2.7 S3 M3LC4**	138	**C362_2.7 P112 BN112M4**	139
580	63	2.2	5.0	2410	**C322_5.0 S3 M3LB2**	134	**C322_5.0 P112 BN112M2**	135
602	60	1.3	4.8	1500	**C222_4.8 S3 M3LB2**	130	**C222_4.8 P112 BN112M2**	131
638	56	2.3	4.5	2330	**C322_4.5 S3 M3LB2**	134	**C322_4.5 P112 BN112M2**	135
667	54	1.4	4.3	1470	**C222_4.3 S3 M3LB2**	130	**C222_4.3 P112 BN112M2**	131
768	47	2.5	3.7	2250	**C322_3.7 S3 M3LB2**	134	**C322_3.7 P112 BN112M2**	135
774	47	1.5	3.7	1450	**C222_3.7 S3 M3LB2**	130	**C222_3.7 P112 BN112M2**	131
844	43	2.7	3.4	2170	**C322_3.4 S3 M3LB2**	134	**C322_3.4 P112 BN112M2**	135
870	42	1.6	3.3	1410	**C222_3.3 S3 M3LB2**	130	**C222_3.3 P112 BN112M2**	131
997	36	2.9	2.9	2100	**C322_2.9 S3 M3LB2**	134	**C322_2.9 P112 BN112M2**	135
1054	34	1.9	2.7	1370	**C222_2.7 S3 M3LB2**	130	**C222_2.7 P112 BN112M2**	131

5.5 kW

n_2 min-1	M_2 Nm	S	i	R_{n2} N	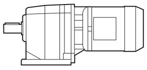		IEC	
3.8	12630	1.0	380.5	85000	**C1004_380.5 S4 M4SA4**	163	**C1004_380.5 P132 BN132S4**	164
4.4	10741	1.1	323.6	85000	**C1004_323.6 S4 M4SA4**	163	**C1004_323.6 P132 BN132S4**	164
4.8	9974	1.2	300.5	85000	**C1004_300.5 S4 M4SA4**	163	**C1004_300.5 P132 BN132S4**	164
5.5	8730	1.4	263.0	85000	**C1004_263.0 S4 M4SA4**	163	**C1004_263.0 P132 BN132S4**	164

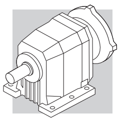

5.5 kW

n_2 min^{-1}	M_2 Nm	S	i	R_{n2} N	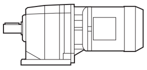	📄	IEC	📄
5.9	8106	1.5	244.2	85000	**C1004_244.2 S4 M4SA4**	163	**C1004_244.2 P132 BN132S4**	164
6.2	7691	0.9	231.7	60000	**C904_231.7 S4 M4SA4**	160	**C904_231.7 P132 BN132S4**	161
6.8	7050	1.0	212.4	60000	**C904_212.4 S4 M4SA4**	160	**C904_212.4 P132 BN132S4**	161
7.2	6625	1.8	199.6	85000	**C1004_199.6 S4 M4SA4**	163	**C1004_199.6 P132 BN132S4**	164
8.4	5838	1.2	172.1	60000	**C903_172.1 S4 M4SA4**	160	**C903_172.1 P132 BN132S4**	161
9.6	5103	2.4	150.4	85000	**C1003_150.4 S4 M4SA4**	163	**C1003_150.4 P132 BN132S4**	164
9.8	4964	1.5	146.3	60000	**C903_146.3 S4 M4SA4**	160	**C903_146.3 P132 BN132S4**	161
12.1	4052	1.0	119.5	35000	**C803_119.5 S4 M4SA4**	157	**C803_119.5 P132 BN132S4**	158
12.3	3960	1.8	116.7	60000	**C903_116.7 S4 M4SA4**	160	**C903_116.7 P132 BN132S4**	161
14.8	3304	1.2	97.4	35000	**C803_97.4 S4 M4SA4**	157	**C803_97.4 P132 BN132S4**	158
15.0	3265	2.2	96.2	60000	**C903_96.2 S4 M4SA4**	160	**C903_96.2 P132 BN132S4**	161
17.7	2755	2.6	81.2	59100	**C903_81.2 S4 M4SA4**	160	**C903_81.2 P132 BN132S4**	161
18.7	2609	1.5	76.9	35000	**C803_76.9 S4 M4SA4**	157	**C803_76.9 P132 BN132S4**	158
20.2	2420	1.0	71.3	25000	**C703_71.3 S4 M4SA4**	154	**C703_71.3 P132 BN132S4**	155
20.4	2392	1.7	70.5	35000	**C803_70.5 S4 M4SA4**	157	**C803_70.5 P132 BN132S4**	158
21.9	2234	1.0	65.9	25000	**C703_65.9 S4 M4SA4**	154	**C703_65.9 P132 BN132S4**	155
25.1	1944	2.1	57.3	35000	**C803_57.3 S4 M4SA4**	157	**C803_57.3 P132 BN132S4**	158
25.5	1917	1.2	56.5	25000	**C703_56.5 S4 M4SA4**	154	**C703_56.5 P132 BN132S4**	155
27.6	1770	1.3	52.2	24700	**C703_52.2 S4 M4SA4**	154	**C703_52.2 P132 BN132S4**	155
30	1616	1.0	47.6	15300	**C613_47.6 S4 M4SA4**	150	**C613_47.6 P132 BN132S4**	151
30	1609	2.4	47.4	35000	**C803_47.4 S4 M4SA4**	157	**C803_47.4 P132 BN132S4**	158
32	1516	1.5	44.7	24100	**C703_44.7 S4 M4SA4**	154	**C703_44.7 P132 BN132S4**	155
33	1475	2.6	43.5	35000	**C803_43.5 S4 M4SA4**	157	**C803_43.5 P132 BN132S4**	158
33	1474	1.1	43.4	15000	**C613_43.4 S4 M4SA4**	150	**C613_43.4 P132 BN132S4**	151
35	1400	1.6	41.3	23800	**C703_41.3 S4 M4SA4**	154	**C703_41.3 P132 BN132S4**	155
37	1355	2.4	39.1	35000	**C802_39.1 S4 M4SA4**	157	**C802_39.1 P132 BN132S4**	158
38	1317	1.0	38.0	14800	**C612_38.0 S4 M4SA4**	150	**C612_38.0 P132 BN132S4**	151
41	1204	1.7	34.7	22100	**C702_34.7 S4 M4SA4**	154	**C702_34.7 P132 BN132S4**	155
42	1186	1.0	34.2	14500	**C612_34.2 S4 M4SA4**	150	**C612_34.2 P132 BN132S4**	151
46	1086	3.4	31.3	33400	**C802_31.3 S4 M4SA4**	157	**C802_31.3 P132 BN132S4**	158
47	1055	1.3	30.4	14300	**C612_30.4 S4 M4SA4**	150	**C612_30.4 P132 BN132S4**	151
48	1020	1.0	30.1	9610	**C513_30.1 S4 M4SA4**	146	**C513_30.1 P132 BN132S4**	147
52	961	2.2	27.7	21200	**C702_27.7 S4 M4SA4**	154	**C702_27.7 P132 BN132S4**	155
52	931	1.0	27.4	9490	**C513_27.4 S4 M4SA4**	146	**C513_27.4 P132 BN132S4**	147
53	950	1.4	27.4	13900	**C612_27.4 S4 M4SA4**	150	**C612_27.4 P132 BN132S4**	151
58	860	1.6	24.8	13700	**C612_24.8 S4 M4SA4**	150	**C612_24.8 P132 BN132S4**	151
62	809	1.0	23.4	9310	**C512_23.4 S4 M4SA4**	146	**C512_23.4 P132 BN132S4**	147
63	792	2.7	22.9	20400	**C702_22.9 S4 M4SA4**	154	**C702_22.9 P132 BN132S4**	155
64	775	1.7	22.4	13400	**C612_22.4 S4 M4SA4**	150	**C612_22.4 P132 BN132S4**	151
69	726	1.1	21.0	9150	**C512_21.0 S4 M4SA4**	146	**C512_21.0 P132 BN132S4**	147
73	679	2.0	19.6	13100	**C612_19.6 S4 M4SA4**	150	**C612_19.6 P132 BN132S4**	151
75	668	3.1	19.3	19700	**C702_19.3 S4 M4SA4**	154	**C702_19.3 P132 BN132S4**	155
76	655	1.2	18.9	9030	**C512_18.9 S4 M4SA4**	146	**C512_18.9 P132 BN132S4**	147
82	612	2.2	17.7	12700	**C612_17.7 S4 M4SA4**	150	**C612_17.7 P132 BN132S4**	151
87	575	1.4	16.6	8810	**C512_16.6 S4 M4SA4**	146	**C512_16.6 P132 BN132S4**	147
90	552	2.4	15.9	12500	**C612_15.9 S4 M4SA4**	150	**C612_15.9 P132 BN132S4**	151
96	519	1.5	15.0	8660	**C512_15.0 S4 M4SA4**	146	**C512_15.0 P132 BN132S4**	147
100	497	2.7	14.3	12100	**C612_14.3 S4 M4SA4**	150	**C612_14.3 P132 BN132S4**	151
101	494	0.9	14.2	4000	**C412_14.2 S4 M4SA4**	142	**C412_14.2 P132 BN132S4**	143
110	455	1.6	13.1	8420	**C512_13.1 S4 M4SA4**	146	**C512_13.1 P132 BN132S4**	147
116	429	1.0	12.4	4060	**C412_12.4 S4 M4SA4**	142	**C412_12.4 P132 BN132S4**	143

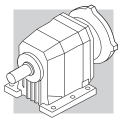

5.5 kW

n_2 min⁻¹	M_2 Nm	S	i	R_{n2} N			IEC	
119	419	3.2	12.1	11600	**C612_12.1 S4 M4SA4**	150	**C612_12.1 P132 BN132S4**	151
122	410	1.9	11.8	8250	**C512_11.8 S4 M4SA4**	146	**C512_11.8 P132 BN132S4**	147
123	399	1.0	11.7	3380	**C362_11.7 S4 M4SA4**	138	**C362_11.7 P132 BN132S4**	139
129	387	1.1	11.2	4030	**C412_11.2 S4 M4SA4**	142	**C412_11.2 P132 BN132S4**	143
136	363	1.0	10.6	3350	**C362_10.6 S4 M4SA4**	138	**C362_10.6 P132 BN132S4**	139
148	338	2.0	9.8	7890	**C512_9.8 S4 M4SA4**	146	**C512_9.8 P132 BN132S4**	147
150	333	1.2	9.6	4030	**C412_9.6 S4 M4SA4**	142	**C412_9.6 P132 BN132S4**	143
164	305	2.2	8.8	7700	**C512_8.8 S4 M4SA4**	146	**C512_8.8 P132 BN132S4**	147
164	301	1.3	8.8	3350	**C362_8.8 S4 M4SA4**	138	**C362_8.8 P132 BN132S4**	139
167	299	1.3	8.6	3980	**C412_8.6 S4 M4SA4**	142	**C412_8.6 P132 BN132S4**	143
179	275	1.3	8.0	3330	**C362_8.0 S4 M4SA4**	138	**C362_8.0 P132 BN132S4**	139
186	269	2.4	7.8	7460	**C512_7.8 S4 M4SA4**	146	**C512_7.8 P132 BN132S4**	147
204	245	1.4	7.1	3920	**C412_7.1 S4 M4SA4**	142	**C412_7.1 P132 BN132S4**	143
206	242	2.6	7.0	7280	**C512_7.0 S4 M4SA4**	146	**C512_7.0 P132 BN132S4**	147
212	232	1.5	6.8	3280	**C362_6.8 S4 M4SA4**	138	**C362_6.8 P132 BN132S4**	139
226	221	1.6	6.4	3840	**C412_6.4 S4 M4SA4**	142	**C412_6.4 P132 BN132S4**	143
240	208	3.2	6.0	9480	**C612_6.0 S4 M4SA4**	150	**C612_6.0 P132 BN132S4**	151
242	206	1.3	6.0	3430	**C412_6.0 S4 M4SA4**	142	**C412_6.0 P132 BN132S4**	143
246	200	1.0	5.8	3020	**C362_5.8 S4 M4SA4**	138	**C362_5.8 P132 BN132S4**	139
256	195	2.2	5.6	6720	**C512_5.6 S4 M4SA4**	146	**C512_5.6 P132 BN132S4**	147
259	193	1.7	11.2	3770	**C412_11.2 S4 M4SA2**	142	**C412_11.2 P132 BN132SA2**	143
262	191	1.3	3.6	3410	**C412_3.6 S4 M4LB6**	142	**C412_3.6 P132 BN132MB6**	143
273	181	1.1	5.3	2930	**C362_5.3 S4 M4SA4**	138	**C362_5.3 P132 BN132S4**	139
286	175	2.4	3.3	6530	**C512_3.3 S4 M4LB6**	146	**C512_3.3 P132 BN132MB6**	147
291	169	0.9	5.0	2480	**C322_5.0 S4 M4SA4**	134	**C322_5.0 P132 BN132S4**	135
301	166	1.9	9.6	3680	**C412_9.6 S4 M4SA2**	142	**C412_9.6 P132 BN132SA2**	143
309	162	1.6	4.7	3360	**C412_4.7 S4 M4SA4**	142	**C412_4.7 P132 BN132S4**	143
312	158	1.3	4.6	2860	**C362_4.6 S4 M4SA4**	138	**C362_4.6 P132 BN132S4**	139
320	154	1.0	4.5	2500	**C322_4.5 S4 M4SA4**	134	**C322_4.5 P132 BN132S4**	135
323	154	2.8	4.5	6330	**C512_4.5 S4 M4SA4**	146	**C512_4.5 P132 BN132S4**	147
334	149	2.0	8.6	3600	**C412_8.6 S4 M4SA2**	142	**C412_8.6 P132 BN132SA2**	143
343	144	1.4	4.2	2830	**C362_4.2 S4 M4SA4**	138	**C362_4.2 P132 BN132S4**	139
355	140	1.7	2.7	3300	**C412_2.7 S4 M4LB6**	142	**C412_2.7 P132 BN132MB6**	143
359	139	2.9	2.6	6150	**C512_2.6 S4 M4LB6**	146	**C512_2.6 P132 BN132MB6**	147
361	138	2.1	8.0	2850	**C362_8.0 S4 M4SA2**	138	**C362_8.0 P132 BN132SA2**	139
386	128	1.2	3.7	2410	**C322_3.7 S4 M4SA4**	134	**C322_3.7 P132 BN132S4**	135
399	125	2.0	3.6	3240	**C412_3.6 S4 M4SA4**	142	**C412_3.6 P132 BN132S4**	143
409	122	2.3	7.1	3460	**C412_7.1 S4 M4SA2**	142	**C412_7.1 P132 BN132SA2**	143
413	119	1.7	3.5	2750	**C362_3.5 S4 M4SA4**	138	**C362_3.5 P132 BN132S4**	139
422	117	1.2	3.4	2370	**C322_3.4 S4 M4SA4**	134	**C322_3.4 P132 BN132S4**	135
425	118	2.4	6.8	2750	**C362_6.8 S4 M4SA2**	138	**C362_6.8 P132 BN132SA2**	139
453	109	1.8	3.2	2700	**C362_3.2 S4 M4SA4**	138	**C362_3.2 P132 BN132S4**	139
454	110	2.5	6.4	3370	**C412_6.4 S4 M4SA2**	142	**C412_6.4 P132 BN132SA2**	143
485	103	2.5	6.0	3140	**C412_6.0 S4 M4SA2**	142	**C412_6.0 P132 BN132SA2**	143
498	100	2.0	5.8	2620	**C362_5.8 S4 M4SA2**	138	**C362_5.8 P132 BN132SA2**	139
500	98	1.3	2.9	2310	**C322_2.9 S4 M4SA4**	134	**C322_2.9 P132 BN132S4**	135
536	92	2.2	2.7	2620	**C362_2.7 S4 M4SA4**	138	**C362_2.7 P132 BN132S4**	139
542	92	2.7	2.7	3070	**C412_2.7 S4 M4SA4**	142	**C412_2.7 P132 BN132S4**	143
545	92	2.2	5.3	2550	**C362_5.3 S4 M4SA2**	138	**C362_5.3 P132 BN132SA2**	139
578	86	1.6	5.0	2230	**C322_5.0 S4 M4SA2**	134	**C322_5.0 P132 BN132SA2**	135
620	81	3.2	4.7	2990	**C412_4.7 S4 M4SA2**	142	**C412_4.7 P132 BN132SA2**	143

5.5 kW

n_2 min-1	M_2 Nm	S	i	R_{n2} N	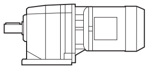		IEC	
642	78	1.7	4.5	2190	**C322_4.5 S4 M4SA2**	134	**C322_4.5 P132 BN132SA2**	135
781	64	1.9	3.7	2120	**C322_3.7 S4 M4SA2**	134	**C322_3.7 P132 BN132SA2**	135
850	59	2.0	3.4	2080	**C322_3.4 S4 M4SA2**	134	**C322_3.4 P132 BN132SA2**	135
1004	50	2.1	2.9	2000	**C322_2.9 S4 M4SA2**	134	**C322_2.9 P132 BN132SA2**	135

7.5 kW

n_2 min-1	M_2 Nm	S	i	R_{n2} N	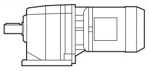		IEC	
5.5	11904	1.0	263.0	85000	**C1004_263.0 S4 M4LA4**	163	**C1004_263.0 P132 BN132MA4**	164
7.2	9034	1.3	199.6	85000	**C1004_199.6 S4 M4LA4**	163	**C1004_199.6 P132 BN132MA4**	164
8.4	7961	0.9	172.1	60000	**C903_172.1 S4 M4LA4**	160	**C903_172.1 P132 BN132MA4**	161
9.6	6958	1.7	150.4	85000	**C1003_150.4 S4 M4LA4**	163	**C1003_150.4 P132 BN132MA4**	164
9.8	6769	1.1	146.3	59600	**C903_146.3 S4 M4LA4**	160	**C903_146.3 P132 BN132MA4**	161
12.3	5400	1.3	116.7	58600	**C903_116.7 S4 M4LA4**	160	**C903_116.7 P132 BN132MA4**	161
12.9	5176	2.3	111.9	85000	**C1003_111.9 S4 M4LA4**	163	**C1003_111.9 P132 BN132MA4**	164
16.1	4129	1.0	89.3	35000	**C803_89.3 S4 M4LA4**	157	**C803_89.3 P132 BN132MA4**	158
16.3	4081	1.7	88.2	56600	**C903_88.2 S4 M4LA4**	160	**C903_88.2 P132 BN132MA4**	161
16.8	3958	3.0	85.6	85000	**C1003_85.6 S4 M4LA4**	163	**C1003_85.6 P132 BN132MA4**	164
19.3	3444	2.1	74.4	55200	**C903_74.4 S4 M4LA4**	160	**C903_74.4 P132 BN132MA4**	161
20.4	3261	1.2	70.5	35000	**C803_70.5 S4 M4LA4**	157	**C803_70.5 P132 BN132MA4**	158
23.0	2891	1.4	62.5	35000	**C803_62.5 S4 M4LA4**	157	**C803_62.5 P132 BN132MA4**	158
24.3	2738	2.6	59.2	53000	**C903_59.2 S4 M4LA4**	160	**C903_59.2 P132 BN132MA4**	161
27.6	2413	1.0	52.2	22900	**C703_52.2 S4 M4LA4**	154	**C703_52.2 P132 BN132MA4**	155
30	2195	1.7	47.4	35000	**C803_47.4 S4 M4LA4**	157	**C803_47.4 P132 BN132MA4**	158
32	2068	1.1	44.7	22500	**C703_44.7 S4 M4LA4**	154	**C703_44.7 P132 BN132MA4**	155
35	1909	1.2	41.3	22300	**C703_41.3 S4 M4LA4**	154	**C703_41.3 P132 BN132MA4**	155
37	1848	1.7	39.1	33600	**C802_39.1 S4 M4LA4**	157	**C802_39.1 P132 BN132MA4**	158
40	1672	0.9	36.1	13300	**C613_36.1 S4 M4LA4**	150	**C613_36.1 P132 BN132MA4**	151
41	1642	1.3	34.7	20500	**C702_34.7 S4 M4LA4**	154	**C702_34.7 P132 BN132MA4**	155
44	1525	1.0	33.0	13100	**C613_33.0 S4 M4LA4**	150	**C613_33.0 P132 BN132MA4**	151
46	1481	2.5	31.3	32200	**C802_31.3 S4 M4LA4**	157	**C802_31.3 P132 BN132MA4**	158
47	1439	0.9	30.4	13000	**C612_30.4 S4 M4LA4**	150	**C612_30.4 P132 BN132MA4**	151
49	1358	1.1	29.4	13100	**C613_29.4 S4 M4LA4**	150	**C613_29.4 P132 BN132MA4**	151
52	1310	1.6	27.7	20000	**C702_27.7 S4 M4LA4**	154	**C702_27.7 P132 BN132MA4**	155
53	1296	1.0	27.4	12800	**C612_27.4 S4 M4LA4**	150	**C612_27.4 P132 BN132MA4**	151
55	1226	3.0	25.9	31000	**C802_25.9 S4 M4LA4**	157	**C802_25.9 P132 BN132MA4**	158
58	1173	1.2	24.8	12700	**C612_24.8 S4 M4LA4**	150	**C612_24.8 P132 BN132MA4**	151
60	1132	3.1	24.0	30500	**C802_24.0 S4 M4LA4**	157	**C802_24.0 P132 BN132MA4**	158
63	1080	1.9	22.9	19400	**C702_22.9 S4 M4LA4**	154	**C702_22.9 P132 BN132MA4**	155
64	1056	1.3	22.4	12500	**C612_22.4 S4 M4LA4**	150	**C612_22.4 P132 BN132MA4**	151
65	1051	3.5	22.2	30000	**C802_22.2 S4 M4LA4**	157	**C802_22.2 P132 BN132MA4**	158
73	926	1.5	19.6	12300	**C612_19.6 S4 M4LA4**	150	**C612_19.6 P132 BN132MA4**	151
75	911	2.3	19.3	18900	**C702_19.3 S4 M4LA4**	154	**C702_19.3 P132 BN132MA4**	155
82	834	1.6	17.7	12000	**C612_17.7 S4 M4LA4**	150	**C612_17.7 P132 BN132MA4**	151
86	789	2.6	16.7	18200	**C702_16.7 S4 M4LA4**	154	**C702_16.7 P132 BN132MA4**	155
87	784	1.0	16.6	8070	**C512_16.6 S4 M4LA4**	146	**C512_16.6 P132 BN132MA4**	147
90	753	1.8	15.9	11800	**C612_15.9 S4 M4LA4**	150	**C612_15.9 P132 BN132MA4**	151
96	707	1.1	15.0	8000	**C512_15.0 S4 M4LA4**	146	**C512_15.0 P132 BN132MA4**	147

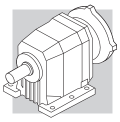

7.5 kW

nn_2 min-1	M_2 Nm	S	i	R_{n2} N	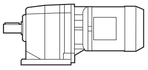		IEC	
100	678	2.0	14.3	11500	**C612_14.3 S4 M4LA4**	150	**C612_14.3 P132 BN132MA4**	151
110	620	1.2	13.1	7840	**C512_13.1 S4 M4LA4**	146	**C512_13.1 P132 BN132MA4**	147
111	616	3.4	13.0	17500	**C702_13.0 S4 M4LA4**	154	**C702_13.0 P132 BN132MA4**	155
119	571	2.4	12.1	11100	**C612_12.1 S4 M4LA4**	150	**C612_12.1 P132 BN132MA4**	151
122	559	1.4	11.8	7730	**C512_11.8 S4 M4LA4**	146	**C512_11.8 P132 BN132MA4**	147
132	515	2.6	10.9	10900	**C612_10.9 S4 M4LA4**	150	**C612_10.9 P132 BN132MA4**	151
147	464	2.9	9.8	10600	**C612_9.8 S4 M4LA4**	150	**C612_9.8 P132 BN132MA4**	151
148	461	1.5	9.8	7450	**C512_9.8 S4 M4LA4**	146	**C512_9.8 P132 BN132MA4**	147
163	418	3.2	8.8	10300	**C612_8.8 S4 M4LA4**	150	**C612_8.8 P132 BN132MA4**	151
164	415	1.6	8.8	7320	**C512_8.8 S4 M4LA4**	146	**C512_8.8 P132 BN132MA4**	147
164	418	0.9	8.8	2880	**C362_8.8 S4 M4LA4**	138	**C362_8.8 P132 BN132MA4**	139
167	408	0.9	8.6	3430	**C412_8.6 S4 M4LA4**	142	**C412_8.6 P132 BN132MA4**	143
179	381	1.0	8.0	2900	**C362_8.0 S4 M4LA4**	138	**C362_8.0 P132 BN132MA4**	139
186	366	1.7	7.8	7120	**C512_7.8 S4 M4LA4**	146	**C512_7.8 P132 BN132MA4**	147
204	334	1.1	7.1	3470	**C412_7.1 S4 M4LA4**	142	**C412_7.1 P132 BN132MA4**	143
206	330	1.9	7.0	6970	**C512_7.0 S4 M4LA4**	146	**C512_7.0 P132 BN132MA4**	147
212	322	1.1	6.8	2900	**C362_6.8 S4 M4LA4**	138	**C362_6.8 P132 BN132MA4**	139
226	301	1.1	6.4	3440	**C412_6.4 S4 M4LA4**	142	**C412_6.4 P132 BN132MA4**	143
240	284	2.3	6.0	9180	**C612_6.0 S4 M4LA4**	150	**C612_6.0 P132 BN132MA4**	151
242	281	0.9	6.0	2920	**C412_6.0 S4 M4LA4**	142	**C412_6.0 P132 BN132MA4**	143
256	266	1.6	5.6	6410	**C512_5.6 S4 M4LA4**	146	**C512_5.6 P132 BN132MA4**	147
309	220	1.2	4.7	2960	**C412_4.7 S4 M4LA4**	142	**C412_4.7 P132 BN132MA4**	143
312	220	0.9	4.6	2600	**C362_4.6 S4 M4LA4**	138	**C362_4.6 P132 BN132MA4**	139
316	215	3.1	4.6	8550	**C612_4.6 S4 M4LA4**	150	**C612_4.6 P132 BN132MA4**	151
323	210	2.1	4.5	6090	**C512_4.5 S4 M4LA4**	146	**C512_4.5 P132 BN132MA4**	147
339	201	3.3	2.8	8390	**C612_2.8 S5 M5SA6**	150	**C612_2.8 P160 BN160M6**	151
343	199	1.0	4.2	2550	**C362_4.2 S4 M4LA4**	138	**C362_4.2 P132 BN132MA4**	139
363	187	2.1	2.6	5920	**C512_2.6 S5 M5SA6**	146	**C512_2.6 P160 BN160M6**	147
399	171	1.5	3.6	2930	**C412_3.6 S4 M4LA4**	142	**C412_3.6 P132 BN132MA4**	143
410	166	1.7	7.1	3240	**C412_7.1 S4 M4SB2**	142	**C412_7.1 P132 BN132SB2**	143
413	166	1.2	3.5	2500	**C362_3.5 S4 M4LA4**	138	**C362_3.5 P132 BN132MA4**	139
435	156	2.7	3.3	5660	**C512_3.3 S4 M4LA4**	146	**C512_3.3 P132 BN132MA4**	147
453	151	1.3	3.2	2500	**C362_3.2 S4 M4LA4**	138	**C362_3.2 P132 BN132MA4**	139
456	149	1.8	6.4	3170	**C412_6.4 S4 M4SB2**	142	**C412_6.4 P132 BN132SB2**	143
487	140	1.9	6.0	2880	**C412_6.0 S4 M4SB2**	142	**C412_6.0 P132 BN132SB2**	143
500	137	1.0	2.9	2100	**C322_2.9 S4 M4LA4**	134	**C322_2.9 P132 BN132MA4**	135
515	132	3.1	5.6	5420	**C512_5.6 S4 M4SB2**	146	**C512_5.6 P132 BN132SB2**	147
536	128	1.6	2.7	2440	**C362_2.7 S4 M4LA4**	138	**C362_2.7 P132 BN132MA4**	139
542	126	1.9	2.7	2840	**C412_2.7 S4 M4LA4**	142	**C412_2.7 P132 BN132MA4**	143
547	126	1.6	5.3	2370	**C362_5.3 S4 M4SB2**	138	**C362_5.3 P132 BN132SB2**	139
548	124	3.2	2.6	5330	**C512_2.6 S4 M4LA4**	146	**C512_2.6 P132 BN132MA4**	147
622	109	2.4	4.7	2790	**C412_4.7 S4 M4SB2**	142	**C412_4.7 P132 BN132SB2**	143
630	109	1.8	4.6	2330	**C362_4.6 S4 M4SB2**	138	**C362_4.6 P132 BN132SB2**	139
690	100	2.0	4.2	2290	**C362_4.2 S4 M4SB2**	138	**C362_4.2 P132 BN132SB2**	139
803	85	3.0	3.6	2670	**C412_3.6 S4 M4SB2**	142	**C412_3.6 P132 BN132SB2**	143
829	83	2.4	3.5	2210	**C362_3.5 S4 M4SB2**	138	**C362_3.5 P132 BN132SB2**	139
906	76	2.6	3.2	2170	**C362_3.2 S4 M4SB2**	138	**C362_3.2 P132 BN132SB2**	139
1074	64	3.1	2.7	2100	**C362_2.7 S4 M4SB2**	138	**C362_2.7 P132 BN132SB2**	139

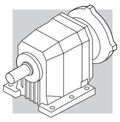

9.2 kW

n2 min-1	M2 Nm	S	i	Rn2 N	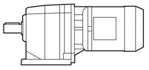			
7.2	11082	1.1	199.6	85000	**C1004_199.6 S4 M4LB4**	163	**C1004_199.6 P132 BN132MB4**	164
7.8	10294	1.2	185.4	85000	**C1004_185.4 S4 M4LB4**	163	**C1004_185.4 P132 BN132MB4**	164
9.6	8536	1.4	150.4	85000	**C1003_150.4 S4 M4LB4**	163	**C1003_150.4 P132 BN132MB4**	164
10.7	7611	0.9	134.1	54900	**C903_134.1 S4 M4LB4**	160	**C903_134.1 P132 BN132MB4**	161
13.5	6072	1.2	107.0	54600	**C903_107.0 S4 M4LB4**	160	**C903_107.0 P132 BN132MB4**	161
15.0	5461	1.3	96.2	54200	**C903_96.2 S4 M4LB4**	160	**C903_96.2 P132 BN132MB4**	161
15.5	5259	2.3	92.7	85000	**C1003_92.7 S4 M4LB4**	163	**C1003_92.7 P132 BN132MB4**	164
17.7	4608	1.6	81.2	53300	**C903_81.2 S4 M4LB4**	160	**C903_81.2 P132 BN132MB4**	161
19.3	4224	1.7	74.4	52700	**C903_74.4 S4 M4LB4**	160	**C903_74.4 P132 BN132MB4**	161
20.4	4001	1.0	70.5	35000	**C803_70.5 S4 M4LB4**	157	**C803_70.5 P132 BN132MB4**	158
24.3	3359	2.1	59.2	51100	**C903_59.2 S4 M4LB4**	160	**C903_59.2 P132 BN132MB4**	161
25.1	3251	1.2	57.3	35000	**C803_57.3 S4 M4LB4**	157	**C803_57.3 P132 BN132MB4**	158
28.6	2854	2.5	50.3	49700	**C903_50.3 S4 M4LB4**	160	**C903_50.3 P132 BN132MB4**	161
30	2692	1.4	47.4	34900	**C803_47.4 S4 M4LB4**	157	**C803_47.4 P132 BN132MB4**	158
32	2536	0.9	44.7	21100	**C703_44.7 S4 M4LB4**	154	**C703_44.7 P132 BN132MB4**	155
33	2468	1.5	43.5	34400	**C803_43.5 S4 M4LB4**	157	**C803_43.5 P132 BN132MB4**	158
35	2341	1.0	41.3	21000	**C703_41.3 S4 M4LB4**	154	**C703_41.3 P132 BN132MB4**	155
37	2267	1.4	39.1	32300	**C802_39.1 S4 M4LB4**	157	**C802_39.1 P132 BN132MB4**	158
41	2034	2.7	35.1	46200	**C902_35.1 S4 M4LB4**	160	**C902_35.1 P132 BN132MB4**	161
41	2014	1.0	34.7	19200	**C702_34.7 S4 M4LB4**	154	**C702_34.7 P132 BN132MB4**	155
46	1816	2.0	31.3	31100	**C802_31.3 S4 M4LB4**	157	**C802_31.3 P132 BN132MB4**	158
49	1706	3.5	29.4	44600	**C902_29.4 S4 M4LB4**	160	**C902_29.4 P132 BN132MB4**	161
52	1607	1.3	27.7	18900	**C702_27.7 S4 M4LB4**	154	**C702_27.7 P132 BN132MB4**	155
58	1439	0.9	24.8	11800	**C612_24.8 S4 M4LB4**	150	**C612_24.8 P132 BN132MB4**	151
63	1325	1.6	22.9	18500	**C702_22.9 S4 M4LB4**	154	**C702_22.9 P132 BN132MB4**	155
64	1296	1.0	22.4	11700	**C612_22.4 S4 M4LB4**	150	**C612_22.4 P132 BN132MB4**	151
65	1289	2.9	22.2	29200	**C802_22.2 S4 M4LB4**	157	**C802_22.2 P132 BN132MB4**	158
73	1136	1.2	19.6	11600	**C612_19.6 S4 M4LB4**	150	**C612_19.6 P132 BN132MB4**	151
75	1118	1.9	19.3	18100	**C702_19.3 S4 M4LB4**	154	**C702_19.3 P132 BN132MB4**	155
82	1023	1.3	17.7	11400	**C612_17.7 S4 M4LB4**	150	**C612_17.7 P132 BN132MB4**	151
86	968	2.1	16.7	17500	**C702_16.7 S4 M4LB4**	154	**C702_16.7 P132 BN132MB4**	155
90	923	1.5	15.9	11200	**C612_15.9 S4 M4LB4**	150	**C612_15.9 P132 BN132MB4**	151
94	889	2.4	15.3	17500	**C702_15.3 S4 M4LB4**	154	**C702_15.3 P132 BN132MB4**	155
96	867	0.9	15.0	7430	**C512_15.0 S4 M4LB4**	146	**C512_15.0 P132 BN132MB4**	147
100	832	1.6	14.3	11000	**C612_14.3 S4 M4LB4**	150	**C612_14.3 P132 BN132MB4**	151
102	817	2.6	14.1	17000	**C702_14.1 S4 M4LB4**	154	**C702_14.1 P132 BN132MB4**	155
110	761	1.0	13.1	7340	**C512_13.1 S4 M4LB4**	146	**C512_13.1 P132 BN132MB4**	147
111	755	2.8	13.0	17000	**C702_13.0 S4 M4LB4**	154	**C702_13.0 P132 BN132MB4**	155
119	701	1.9	12.1	10700	**C612_12.1 S4 M4LB4**	150	**C612_12.1 P132 BN132MB4**	151
122	686	1.1	11.8	7280	**C512_11.8 S4 M4LB4**	146	**C512_11.8 P132 BN132MB4**	147
127	658	3.2	22.9	16500	**C702_22.9 S4 M4LA2**	154	**C702_22.9 P132 BN132M2**	155
132	631	2.1	10.9	10500	**C612_10.9 S4 M4LB4**	150	**C612_10.9 P132 BN132MB4**	151
147	569	2.4	9.8	10300	**C612_9.8 S4 M4LB4**	150	**C612_9.8 P132 BN132MB4**	151
148	565	1.2	9.8	7080	**C512_9.8 S4 M4LB4**	146	**C512_9.8 P132 BN132MB4**	147
163	513	2.6	8.8	10000	**C612_8.8 S4 M4LB4**	150	**C612_8.8 P132 BN132MB4**	151
164	510	1.3	8.8	6990	**C512_8.8 S4 M4LB4**	146	**C512_8.8 P132 BN132MB4**	147
186	449	1.4	7.8	6820	**C512_7.8 S4 M4LB4**	146	**C512_7.8 P132 BN132MB4**	147
192	434	3.1	7.5	9670	**C612_7.5 S4 M4LB4**	150	**C612_7.5 P132 BN132MB4**	151
206	405	1.6	7.0	6710	**C512_7.0 S4 M4LB4**	146	**C512_7.0 P132 BN132MB4**	147
212	393	0.9	6.8	2600	**C362_6.8 S4 M4LB4**	138	**C362_6.8 P132 BN132MB4**	139
214	391	3.5	6.7	9410	**C612_6.7 S4 M4LB4**	150	**C612_6.7 P132 BN132MB4**	151

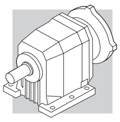

9.2 kW

n_2 min^{-1}	M_2 Nm	S	i	R_{n2} N			IEC	
226	369	0.9	6.4	3100	**C412_6.4 S4 M4LB4**	142	**C412_6.4 P132 BN132MB4**	143
240	348	1.9	6.0	8930	**C612_6.0 S4 M4LB4**	150	**C612_6.0 P132 BN132MB4**	151
256	326	1.3	5.6	6150	**C512_5.6 S4 M4LB4**	146	**C512_5.6 P132 BN132MB4**	147
260	321	1.0	11.2	3110	**C412_11.2 S4 M4LA2**	142	**C412_11.2 P132 BN132M2**	143
309	270	1.0	4.7	2620	**C412_4.7 S4 M4LB4**	142	**C412_4.7 P132 BN132MB4**	143
316	264	2.5	4.6	8360	**C612_4.6 S4 M4LB4**	150	**C612_4.6 P132 BN132MB4**	151
323	258	1.7	4.5	5880	**C512_4.5 S4 M4LB4**	146	**C512_4.5 P132 BN132MB4**	147
336	249	1.2	8.6	3090	**C412_8.6 S4 M4LA2**	142	**C412_8.6 P132 BN132M2**	143
374	223	2.3	7.8	5870	**C512_7.8 S4 M4LA2**	146	**C512_7.8 P132 BN132M2**	147
399	209	1.2	3.6	2670	**C412_3.6 S4 M4LB4**	142	**C412_3.6 P132 BN132MB4**	143
410	203	1.4	7.1	3050	**C412_7.1 S4 M4LA2**	142	**C412_7.1 P132 BN132M2**	143
413	202	1.0	3.5	2300	**C362_3.5 S4 M4LB4**	138	**C362_3.5 P132 BN132MB4**	139
415	201	2.5	7.0	5730	**C512_7.0 S4 M4LA2**	146	**C512_7.0 P132 BN132M2**	147
435	192	2.2	3.3	5510	**C512_3.3 S4 M4LB4**	146	**C512_3.3 P132 BN132MB4**	147
453	184	1.1	3.2	2300	**C362_3.2 S4 M4LB4**	138	**C362_3.2 P132 BN132MB4**	139
456	183	1.5	6.4	3000	**C412_6.4 S4 M4LA2**	142	**C412_6.4 P132 BN132M2**	143
487	171	1.5	6.0	2660	**C412_6.0 S4 M4LA2**	142	**C412_6.0 P132 BN132M2**	143
515	162	2.6	5.6	5290	**C512_5.6 S4 M4LA2**	146	**C512_5.6 P132 BN132M2**	147
536	156	1.3	2.7	2280	**C362_2.7 S4 M4LB4**	138	**C362_2.7 P132 BN132MB4**	139
542	154	1.6	2.7	2650	**C412_2.7 S4 M4LB4**	142	**C412_2.7 P132 BN132MB4**	143
548	152	2.6	2.6	5210	**C512_2.6 S4 M4LB4**	146	**C512_2.6 P132 BN132MB4**	147
622	134	1.9	4.7	2620	**C412_4.7 S4 M4LA2**	142	**C412_4.7 P132 BN132M2**	143
651	128	3.4	4.5	4980	**C512_4.5 S4 M4LA2**	146	**C512_4.5 P132 BN132M2**	147
698	120	1.7	4.2	2180	**C362_4.2 S4 M4LA2**	138	**C362_4.2 P132 BN132M2**	139
803	104	2.5	3.6	2540	**C412_3.6 S4 M4LA2**	142	**C412_3.6 P132 BN132M2**	143
837	100	2.0	3.5	2120	**C362_3.5 S4 M4LA2**	138	**C362_3.5 P132 BN132M2**	139
916	91	2.2	3.2	2090	**C362_3.2 S4 M4LA2**	138	**C362_3.2 P132 BN132M2**	139
1091	77	3.2	2.7	2410	**C412_2.7 S4 M4LA2**	142	**C412_2.7 P132 BN132M2**	143
1091	77	2.6	2.7	2020	**C362_2.7 S4 M4LA2**	138	**C362_2.7 P132 BN132M2**	139

11 kW

n_2 min^{-1}	M_2 Nm	S	i	R_{n2} N			IEC	
7.2	13251	0.9	199.6	85000	**C1004_199.6 S4 M4LC4**	163	**C1004_199.6 P160 BN160MR4**	164
9.6	10206	1.2	150.4	85000	**C1003_150.4 S4 M4LC4**	163	**C1003_150.4 P160 BN160MR4**	164
12.3	7920	0.9	116.7	50800	**C903_116.7 S4 M4LC4**	160	**C903_116.7 P160 BN160MR4**	161
12.9	7592	1.6	111.9	85000	**C1003_111.9 S4 M4LC4**	163	**C1003_111.9 P160 BN160MR4**	164
15.5	6287	1.9	92.7	85000	**C1003_92.7 S4 M4LC4**	163	**C1003_92.7 P160 BN160MR4**	164
16.3	5985	1.2	88.2	50700	**C903_88.2 S4 M4LC4**	160	**C903_88.2 P160 BN160MR4**	161
19.3	5051	1.4	74.4	50200	**C903_74.4 S4 M4LC4**	160	**C903_74.4 P160 BN160MR4**	161
20.7	4710	2.5	69.4	84800	**C1003_69.4 S4 M4LC4**	163	**C1003_69.4 P160 BN160MR4**	164
24.3	4016	1.8	59.2	49000	**C903_59.2 S4 M4LC4**	160	**C903_59.2 P160 BN160MR4**	161
25.1	3887	1.0	57.3	34200	**C803_57.3 S4 M4LC4**	157	**C803_57.3 P160 BN160MR4**	158
28.6	3413	2.1	50.3	48000	**C903_50.3 S4 M4LC4**	160	**C903_50.3 P160 BN160MR4**	161
30	3219	1.2	47.4	33500	**C803_47.4 S4 M4LC4**	157	**C803_47.4 P160 BN160MR4**	158
33	2951	1.3	43.5	33100	**C803_43.5 S4 M4LC4**	157	**C803_43.5 P160 BN160MR4**	158
37	2673	2.7	39.4	46100	**C903_39.4 S4 M4LC4**	160	**C903_39.4 P160 BN160MR4**	161
37	2711	1.2	39.1	30900	**C802_39.1 S4 M4LC4**	157	**C802_39.1 P160 BN160MR4**	158

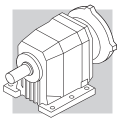

11 kW

n2 min-1	M2 Nm	S	i	Rn2 N	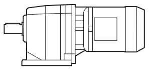		IEC	
41	2432	2.2	35.1	45000	**C902_35.1 S4 M4LC4**	160	**C902_35.1 P160 BN160MR4**	161
46	2172	1.7	31.3	30000	**C802_31.3 S4 M4LC4**	157	**C802_31.3 P160 BN160MR4**	158
52	1921	1.1	27.7	17800	**C702_27.7 S4 M4LC4**	154	**C702_27.7 P160 BN160MR4**	155
55	1798	2.1	25.9	29200	**C802_25.9 S4 M4LC4**	157	**C802_25.9 P160 BN160MR4**	158
63	1584	1.3	22.9	17600	**C702_22.9 S4 M4LC4**	154	**C702_22.9 P160 BN160MR4**	155
65	1542	2.4	22.2	28400	**C802_22.2 S4 M4LC4**	157	**C802_22.2 P160 BN160MR4**	158
70	1423	2.5	20.5	28000	**C802_20.5 S4 M4LC4**	157	**C802_20.5 P160 BN160MR4**	158
73	1358	1.0	19.6	10800	**C612_19.6 S4 M4LC4**	150	**C612_19.6 P160 BN160MR4**	151
75	1337	1.6	19.3	17300	**C702_19.3 S4 M4LC4**	154	**C702_19.3 P160 BN160MR4**	155
80	1251	3.0	18.1	27300	**C802_18.1 S4 M4LC4**	157	**C802_18.1 P160 BN160MR4**	158
82	1223	1.1	17.7	10700	**C612_17.7 S4 M4LC4**	150	**C612_17.7 P160 BN160MR4**	151
86	1158	1.8	16.7	16800	**C702_16.7 S4 M4LC4**	154	**C702_16.7 P160 BN160MR4**	155
86	1155	3.0	16.7	26900	**C802_16.7 S4 M4LC4**	157	**C802_16.7 P160 BN160MR4**	158
90	1104	1.2	15.9	10700	**C612_15.9 S4 M4LC4**	150	**C612_15.9 P160 BN160MR4**	151
94	1063	2.0	15.3	16800	**C702_15.3 S4 M4LC4**	154	**C702_15.3 P160 BN160MR4**	155
100	994	1.4	14.3	10500	**C612_14.3 S4 M4LC4**	150	**C612_14.3 P160 BN160MR4**	151
102	977	2.2	14.1	16400	**C702_14.1 S4 M4LC4**	154	**C702_14.1 P160 BN160MR4**	155
111	903	2.3	13.0	16400	**C702_13.0 S4 M4LC4**	154	**C702_13.0 P160 BN160MR4**	155
119	838	1.6	12.1	10300	**C612_12.1 S4 M4LC4**	150	**C612_12.1 P160 BN160MR4**	151
122	820	0.9	11.8	6810	**C512_11.8 S4 M4LC4**	146	**C512_11.8 P160 BN160MR4**	147
128	777	2.8	11.2	15800	**C702_11.2 S4 M4LC4**	154	**C702_11.2 P160 BN160MR4**	155
132	755	1.8	10.9	10100	**C612_10.9 S4 M4LC4**	150	**C612_10.9 P160 BN160MR4**	151
141	707	3.0	10.2	15700	**C702_10.2 S4 M4LC4**	154	**C702_10.2 P160 BN160MR4**	155
147	680	2.0	9.8	9910	**C612_9.8 S4 M4LC4**	150	**C612_9.8 P160 BN160MR4**	151
148	676	1.0	9.8	6690	**C512_9.8 S4 M4LC4**	146	**C512_9.8 P160 BN160MR4**	147
151	660	3.3	9.5	15400	**C702_9.5 S4 M4LC4**	154	**C702_9.5 P160 BN160MR4**	155
163	613	2.2	8.8	9690	**C612_8.8 S4 M4LC4**	150	**C612_8.8 P160 BN160MR4**	151
164	609	1.1	8.8	6640	**C512_8.8 S4 M4LC4**	146	**C512_8.8 P160 BN160MR4**	147
186	537	1.2	7.8	6510	**C512_7.8 S4 M4LC4**	146	**C512_7.8 P160 BN160MR4**	147
192	519	2.6	7.5	9390	**C612_7.5 S4 M4LC4**	150	**C612_7.5 P160 BN160MR4**	151
206	484	1.3	7.0	6430	**C512_7.0 S4 M4LC4**	146	**C512_7.0 P160 BN160MR4**	147
214	467	2.9	6.7	9150	**C612_6.7 S4 M4LC4**	150	**C612_6.7 P160 BN160MR4**	151
240	416	1.6	6.0	8670	**C612_6.0 S4 M4LC4**	150	**C612_6.0 P160 BN160MR4**	151
256	390	1.1	5.6	5880	**C512_5.6 S4 M4LC4**	146	**C512_5.6 P160 BN160MR4**	147
290	344	1.2	3.3	5770	**C512_3.3 S5 M5SA6**	146	**C512_3.3 P160 BN160L6**	147
316	316	2.1	4.6	8160	**C612_4.6 S4 M4LC4**	150	**C612_4.6 P160 BN160MR4**	151
323	309	1.4	4.5	5660	**C512_4.5 S4 M4LC4**	146	**C512_4.5 P160 BN160MR4**	147
338	295	1.0	8.6	2850	**C412_8.6 S4 M4LC2**	142		
365	273	1.5	2.6	5540	**C512_2.6 S5 M5SA6**	146	**C512_2.6 P160 BN160L6**	147
389	256	2.6	3.7	7760	**C612_3.7 S4 M4LC4**	150	**C612_3.7 P160 BN160MR4**	151
399	250	1.0	3.6	2390	**C412_3.6 S4 M4LC4**	142		
413	242	1.2	7.1	2860	**C412_7.1 S4 M4LC2**	142		
435	229	1.8	3.3	5340	**C512_3.3 S4 M4LC4**	146	**C512_3.3 P160 BN160MR4**	147
459	217	1.3	6.4	2820	**C412_6.4 S4 M4LC2**	142		
491	203	1.3	6.0	2440	**C412_6.0 S4 M4LC2**	142		
511	195	3.4	2.8	7240	**C612_2.8 S4 M4LC4**	150	**C612_2.8 P160 BN160MR4**	151
519	192	2.2	5.6	5140	**C512_5.6 S4 M4LC2**	146	**C512_5.6 P160 BN160MA2**	147
542	184	1.3	2.7	2440	**C412_2.7 S4 M4LC4**	142		
548	182	2.2	2.6	5080	**C512_2.6 S4 M4LC4**	146	**C512_2.6 P160 BN160MR4**	147
626	159	1.6	4.7	2440	**C412_4.7 S4 M4LC2**	142		
656	152	2.9	4.5	4870	**C512_4.5 S4 M4LC2**	146	**C512_4.5 P160 BN160MA2**	147

11 kW

n_2 min^{-1}	M_2 Nm	S	i	R_{n2} N			IEC	
809	123	2.1	3.6	2400	**C412_3.6 S4 M4LC2**	142		
1098	91	2.7	2.7	2300	**C412_2.7 S4 M4LC2**	142		

15 kW

n_2 min^{-1}	M_2 Nm	S	i	R_{n2} N			IEC	
10.5	12728	0.9	92.7	83900			**C1003_92.7 P180 BN180L6**	164
12.1	10997	1.1	120.5	83800	**C1003_120.5 S5 M5SB4**	163	**C1003_120.5 P160 BN160L4**	164
15.2	8782	0.8	96.2	43600	**C903_96.2 S5 M5SB4**	160	**C903_96.2 P160 BN160L4**	161
15.8	8456	1.4	92.7	82400	**C1003_92.7 S5 M5SB4**	163	**C1003_92.7 P160 BN160L4**	164
18.0	7411	1.0	81.2	44300	**C903_81.2 S5 M5SB4**	160	**C903_81.2 P160 BN160L4**	161
18.4	7249	1.7	79.4	81000	**C1003_79.4 S5 M5SB4**	163	**C1003_79.4 P160 BN160L4**	164
24.7	5402	1.3	59.2	44400	**C903_59.2 S5 M5SB4**	160	**C903_59.2 P160 BN160L4**	161
25.5	5233	2.3	57.4	77400	**C1003_57.4 S5 M5SB4**	163	**C1003_57.4 P160 BN160L4**	164
29.0	4590	1.5	50.3	44100	**C903_50.3 S5 M5SB4**	160	**C903_50.3 P160 BN160L4**	161
32	4218	2.8	46.2	74500	**C1003_46.2 S5 M5SB4**	163	**C1003_46.2 P160 BN160L4**	164
34	3968	1.0	43.5	30300	**C803_43.5 S5 M5SB4**	157	**C803_43.5 P160 BN160L4**	158
37	3595	2.0	39.4	43000	**C903_39.4 S5 M5SB4**	160	**C903_39.4 P160 BN160L4**	161
42	3272	1.7	35.1	42200	**C902_35.1 S5 M5SB4**	160	**C902_35.1 P160 BN160L4**	161
47	2921	1.3	31.3	27500	**C802_31.3 S5 M5SB4**	157	**C802_31.3 P160 BN160L4**	158
54	2533	2.2	27.2	40700	**C902_27.2 S5 M5SB4**	160	**C902_27.2 P160 BN160L4**	161
56	2419	1.5	25.9	27100	**C802_25.9 S5 M5SB4**	157	**C802_25.9 P160 BN160L4**	158
64	2136	2.9	22.9	39500	**C902_22.9 S5 M5SB4**	160	**C902_22.9 P160 BN160L4**	161
66	2073	1.8	22.2	26600	**C802_22.2 S5 M5SB4**	157	**C802_22.2 P160 BN160L4**	158
76	1798	1.2	19.3	15600	**C702_19.3 S5 M5SB4**	154	**C702_19.3 P160 BN160L4**	155
81	1683	2.2	18.1	25800	**C802_18.1 S5 M5SB4**	157	**C802_18.1 P160 BN160L4**	158
92	1485	0.9	15.9	9350	**C612_15.9 S5 M5SB4**	150	**C612_15.9 P160 BN160L4**	151
95	1429	1.5	15.3	15400	**C702_15.3 S5 M5SB4**	154	**C702_15.3 P160 BN160L4**	155
98	1390	2.7	14.9	25000	**C802_14.9 S5 M5SB4**	157	**C802_14.9 P160 BN160L4**	158
102	1337	1.0	14.3	9280	**C612_14.3 S5 M5SB4**	150	**C612_14.3 P160 BN160L4**	151
112	1215	1.7	13.0	15200	**C702_13.0 S5 M5SB4**	154	**C702_13.0 P160 BN160L4**	155
121	1127	1.2	12.1	9270	**C612_12.1 S5 M5SB4**	150	**C612_12.1 P160 BN160L4**	151
121	1120	3.3	12.0	24000	**C802_12.0 S5 M5SB4**	157	**C802_12.0 P160 BN160L4**	158
130	1045	2.1	11.2	14700	**C702_11.2 S5 M5SB4**	154	**C702_11.2 P160 BN160L4**	155
134	1015	1.3	10.9	9140	**C612_10.9 S5 M5SB4**	150	**C612_10.9 P160 BN160L4**	151
149	915	1.5	9.8	9090	**C612_9.8 S5 M5SB4**	150	**C612_9.8 P160 BN160L4**	151
153	888	2.4	9.5	14400	**C702_9.5 S5 M5SB4**	154	**C702_9.5 P160 BN160L4**	155
165	824	1.6	8.8	8930	**C612_8.8 S5 M5SB4**	150	**C612_8.8 P160 BN160L4**	151
182	746	2.8	8.0	14200			**C702_8.0 P160 BN160L4**	155
195	698	1.9	7.5	8760	**C612_7.5 S5 M5SB4**	150	**C612_7.5 P160 BN160L4**	151
209	651	1.0	7.0	5810			**C512_7.0 P160 BN160L4**	147
217	628	2.1	6.7	8570	**C612_6.7 S5 M5SB4**	150	**C612_6.7 P160 BN160L4**	151
223	610	1.0	13.1	5760			**C512_13.1 P160 BN160MB2**	147
242	562	2.4	12.1	8430	**C612_12.1 S5 M5SB2**	150	**C612_12.1 P160 BN160MB2**	151
248	550	1.1	11.8	5720			**C512_11.8 P160 BN160MB2**	147
269	506	2.7	10.9	8230	**C612_10.9 S5 M5SB2**	150	**C612_10.9 P160 BN160MB2**	151
298	456	2.9	9.8	8090	**C612_9.8 S5 M5SB2**	150	**C612_9.8 P160 BN160MB2**	151
300	453	1.2	9.8	5570			**C512_9.8 P160 BN160MB2**	147

15 kW

n_2 min^{-1}	M_2 Nm	S	i	R_{n2} N			IEC	
320	425	1.6	4.6	7690	**C612_4.6 S5 M5SB4**	150	**C612_4.6 P160 BN160L4**	151
328	415	1.0	4.5	5170			**C512_4.5 P160 BN160L4**	147
331	411	3.2	8.8	7880	**C612_8.8 S5 M5SB2**	150	**C612_8.8 P160 BN160MB2**	151
333	408	1.3	8.8	5490			**C512_8.8 P160 BN160MB2**	147
378	360	1.4	7.8	5370			**C512_7.8 P160 BN160MB2**	147
395	345	1.9	3.7	7370	**C612_3.7 S5 M5SB4**	150	**C612_3.7 P160 BN160L4**	151
419	325	1.5	7.0	5280			**C512_7.0 P160 BN160MB2**	147
441	308	1.4	3.3	4970			**C512_3.3 P160 BN160L4**	147
488	279	2.4	6.0	7030	**C612_6.0 S5 M5SB2**	150	**C612_6.0 P160 BN160MB2**	151
518	263	2.5	2.8	6940	**C612_2.8 S5 M5SB4**	150	**C612_2.8 P160 BN160L4**	151
520	262	1.6	5.6	4840			**C512_5.6 P160 BN160MB2**	147
555	245	1.6	2.6	4780			**C512_2.6 P160 BN160L4**	147
643	212	3.1	4.6	6580	**C612_4.6 S5 M5SB2**	150	**C612_4.6 P160 BN160MB2**	151
658	207	2.1	4.5	4630			**C512_4.5 P160 BN160MB2**	147
886	154	2.7	3.3	4330			**C512_3.3 P160 BN160MB2**	147
1115	122	3.3	2.6	4100			**C512_2.6 P160 BN160MB2**	147

18.5 kW

n_2 min^{-1}	M_2 Nm	S	i	R_{n2} N			IEC	
13.0	12594	1.0	111.9	76600	**C1003_111.9 S5 M5LA4**	163	**C1003_111.9 P180 BN180M4**	164
15.8	10429	1.2	92.7	76700	**C1003_92.7 S5 M5LA4**	163	**C1003_92.7 P180 BN180M4**	164
21.0	7813	1.5	69.4	75400	**C1003_69.4 S5 M5LA4**	163	**C1003_69.4 P180 BN180M4**	164
22.6	7268	1.0	64.6	40300	**C903_64.6 S5 M5LA4**	160	**C903_64.6 P180 BN180M4**	161
26.6	6175	1.2	54.9	40700	**C903_54.9 S5 M5LA4**	160	**C903_54.9 P180 BN180M4**	161
27.4	5993	2.0	53.3	73100	**C1003_53.3 S5 M5LA4**	163	**C1003_53.3 P180 BN180M4**	164
34	4837	1.5	43.0	40600	**C903_43.0 S5 M5LA4**	160	**C903_43.0 P180 BN180M4**	161
34	4831	2.5	42.9	70800	**C1003_42.9 S5 M5LA4**	163	**C1003_42.9 P180 BN180M4**	164
42	4035	1.3	35.1	39800	**C902_35.1 S5 M5LA4**	160	**C902_35.1 P180 BN180M4**	161
43	3860	3.0	34.3	68100	**C1003_34.3 S5 M5LA4**	163	**C1003_34.3 P180 BN180M4**	164
50	3384	1.7	29.4	39100	**C902_29.4 S5 M5LA4**	160	**C902_29.4 P180 BN180M4**	161
56	2983	1.2	25.9	25300	**C802_25.9 S5 M5LA4**	157	**C802_25.9 P180 BN180M4**	158
66	2557	1.4	22.2	25100	**C802_22.2 S5 M5LA4**	157	**C802_22.2 P180 BN180M4**	158
76	2217	0.9	19.3	14100	**C702_19.3 S5 M5LA4**	154	**C702_19.3 P180 BN180M4**	155
87	1920	1.1	16.7	13800	**C702_16.7 S5 M5LA4**	154	**C702_16.7 P180 BN180M4**	155
88	1916	1.8	16.7	24400	**C802_16.7 S5 M5LA4**	157	**C802_16.7 P180 BN180M4**	158
104	1620	1.3	14.1	13900	**C702_14.1 S5 M5LA4**	154	**C702_14.1 P180 BN180M4**	155
106	1582	2.2	13.8	23700	**C802_13.8 S5 M5LA4**	157	**C802_13.8 P180 BN180M4**	158
121	1390	1.0	12.1	8420	**C612_12.1 S5 M5LA4**	150	**C612_12.1 P180 BN180M4**	151
130	1289	1.7	11.2	13800	**C702_11.2 S5 M5LA4**	154	**C702_11.2 P180 BN180M4**	155
132	1275	2.7	11.1	22900	**C802_11.1 S5 M5LA4**	157	**C802_11.1 P180 BN180M4**	158
134	1252	1.1	10.9	8360	**C612_10.9 S5 M5LA4**	150	**C612_10.9 P180 BN180M4**	151
149	1129	1.2	9.8	8400	**C612_9.8 S5 M5LA4**	150	**C612_9.8 P180 BN180M4**	151
153	1095	2.0	9.5	13600	**C702_9.5 S5 M5LA4**	154	**C702_9.5 P180 BN180M4**	155
165	1019	3.4	8.9	21900	**C802_8.9 S5 M5LA4**	157	**C802_8.9 P180 BN180M4**	158
165	1016	1.3	8.8	8300	**C612_8.8 S5 M5LA4**	150	**C612_8.8 P180 BN180M4**	151
195	860	1.6	7.5	8230	**C612_7.5 S5 M5LA4**	150	**C612_7.5 P180 BN180M4**	151
217	775	1.7	6.7	8090	**C612_6.7 S5 M5LA4**	150	**C612_6.7 P180 BN180M4**	151

18.5 kW

n_2 min^{-1}	M_2 Nm	S	i	R_{n2} N			IEC	
233	719	2.7	6.3	13100			**C702_6.3 P180 BN180M4**	155
243	690	1.0	6.0	7550	**C612_6.0 S5 M5LA4**	150	**C612_6.0 P180 BN180M4**	151
250	673	2.8	5.9	12800			**C702_5.9 P180 BN180M4**	155
269	624	2.2	10.9	7840	**C612_10.9 S5 M5SC2**	150	**C612_10.9 P160BN160L2**	151
298	562	2.4	9.8	7740	**C612_9.8 S5 M5SC2**	150	**C612_9.8 P160BN160L2**	151
300	559	1.0	9.8	5190			**C512_9.8 P160BN160L2**	147
319	526	3.2	4.6	12300			**C702_4.6 P180 BN180M4**	155
320	524	1.3	4.6	7300	**C612_4.6 S5 M5LA4**	150	**C612_4.6 P180 BN180M4**	151
331	507	2.6	8.8	7570	**C612_8.8 S5 M5SC2**	150	**C612_8.8 P160BN160L2**	151
333	504	1.1	8.8	5160			**C512_8.8 P160BN160L2**	147
378	444	1.1	7.8	5070			**C512_7.8 P160BN160L2**	147
391	429	2.9	7.5	7350	**C612_7.5 S5 M5SC2**	150	**C612_7.5 P160BN160L2**	151
395	425	1.6	3.7	7060	**C612_3.7 S5 M5LA4**	150	**C612_3.7 P180 BN180M4**	151
419	400	1.2	7.0	5010			**C512_7.0 P160BN160L2**	147
435	386	3.1	6.7	7170	**C612_6.7 S5 M5SC2**	150	**C612_6.7 P160BN160L2**	151
441	380	1.1	3.3	4660			**C512_3.3 P180 BN180M4**	147
488	344	1.9	6.0	6780	**C612_6.0 S5 M5SC2**	150	**C612_6.0 P160BN160L2**	151
518	324	2.1	2.8	6700	**C612_2.8 S5 M5LA4**	150	**C612_2.8 P180 BN180M4**	151
520	323	1.3	5.6	4580			**C512_5.6 P160BN160L2**	147
555	302	1.3	2.6	4540			**C512_2.6 P180 BN180M4**	147
643	261	2.5	4.6	6390	**C612_4.6 S5 M5SC2**	150	**C612_4.6 P160BN160L2**	151
658	255	1.7	4.5	4420			**C512_4.5 P160BN160L2**	147
792	212	3.1	3.7	6080	**C612_3.7 S5 M5SC2**	150	**C612_3.7 P160BN160L2**	151
886	189	2.2	3.3	4180			**C512_3.3 P160BN160L2**	147
1115	151	2.7	2.6	3980			**C512_2.6 P160BN160L2**	147

22 kW

n_2 min^{-1}	M_2 Nm	S	i	R_{n2} N			IEC	
14.7	13266	0.9	99.8	70600			**C1003_99.8 P180 BN180L4**	164
18.5	10560	1.1	79.4	71200			**C1003_79.4 P180 BN180L4**	164
24.8	7869	0.9	59.2	36700			**C903_59.2 P180 BN180L4**	161
25.6	7623	1.6	57.4	70300			**C1003_57.4 P180 BN180L4**	164
29.2	6686	1.1	50.3	37400			**C903_50.3 P180 BN180L4**	161
32	6144	2.0	46.2	68800			**C1003_46.2 P180 BN180L4**	164
40	4909	2.4	36.9	66700			**C1003_36.9 P180 BN180L4**	164
42	4766	1.1	35.1	37400			**C902_35.1 P180 BN180L4**	161
50	4013	2.3	29.6	64100			**C1002_29.6 P180 BN180L4**	164
50	3997	1.5	29.4	37100			**C902_29.4 P180 BN180L4**	161
61	3252	1.1	24.0	23700			**C802_24.0 P180 BN180L4**	158
64	3112	2.0	22.9	36400			**C902_22.9 P180 BN180L4**	161
81	2451	1.5	18.1	23300			**C802_18.1 P180 BN180L4**	158
85	2350	2.8	17.3	34900			**C902_17.3 P180 BN180L4**	161
88	2268	0.9	16.7	12400			**C702_16.7 P180 BN180L4**	155
99	2025	1.8	14.9	22900			**C802_14.9 P180 BN180L4**	158
104	1914	1.1	14.1	12700			**C702_14.1 P180 BN180L4**	155
106	1881	3.2	13.9	33700			**C902_13.9 P180 BN180L4**	161
131	1522	1.4	11.2	12900			**C702_11.2 P180 BN180L4**	155

22 kW

n2 min-1	M2 Nm	S	i	Rn2 N			IEC	
133	1506	2.3	11.1	22100			**C802_11.1 P180 BN180L4**	158
135	1478	0.9	10.9	7580			**C612_10.9 P180 BN180L4**	151
150	1333	1.0	9.8	7710			**C612_9.8 P180 BN180L4**	151
154	1293	1.7	9.5	12800			**C702_9.5 P180 BN180L4**	155
166	1204	2.9	8.9	21300			**C802_8.9 P180 BN180L4**	158
166	1201	1.1	8.8	7660			**C612_8.8 P180 BN180L4**	151
184	1085	1.2	15.9	7710			**C612_15.9 P180 BN180M2**	151
196	1016	1.3	7.5	7690			**C612_7.5 P180 BN180L4**	151
197	1013	2.0	7.5	12700			**C702_7.5 P180 BN180L4**	155
209	956	3.5	7.0	20400			**C802_7.0 P180 BN180L4**	158
218	915	1.5	6.7	7600			**C612_6.7 P180 BN180L4**	151
251	794	2.4	5.9	12300			**C702_5.9 P180 BN180L4**	155
269	742	1.8	10.9	7460			**C612_10.9 P180 BN180M2**	151
298	669	2.0	9.8	7390			**C612_9.8 P180 BN180M2**	151
322	621	2.7	4.6	11900			**C702_4.6 P180 BN180L4**	155
323	619	1.1	4.6	6910			**C612_4.6 P180 BN180L4**	151
331	602	2.2	8.8	7250			**C612_8.8 P180 BN180M2**	151
333	599	0.9	8.8	4820			**C512_8.8 P180 BN180M2**	147
378	528	1.0	7.8	4770			**C512_7.8 P180 BN180M2**	147
391	510	2.4	7.5	7080			**C612_7.5 P180 BN180M2**	151
397	502	1.3	3.7	6740			**C612_3.7 P180 BN180L4**	151
419	476	1.1	7.0	4740			**C512_7.0 P180 BN180M2**	147
435	459	2.6	6.7	6920			**C612_6.7 P180 BN180M2**	151
444	449	0.9	3.3	4350			**C512_3.3 P180 BN180L4**	147
488	409	1.6	6.0	6530			**C612_6.0 P180 BN180M2**	151
520	384	1.1	5.6	4310			**C512_5.6 P180 BN180M2**	147
521	383	1.7	2.8	6450			**C612_2.8 P180 BN180L4**	151
559	357	1.1	2.6	4290			**C512_2.6 P180 BN180L4**	147
643	310	2.1	4.6	6200			**C612_4.6 P180 BN180M2**	151
658	303	1.4	4.5	4210			**C512_4.5 P180 BN180M2**	147
792	252	2.6	3.7	5930			**C612_3.7 P180 BN180M2**	151
886	225	1.9	3.3	4030			**C512_3.3 P180 BN180M2**	147
1039	192	3.5	2.8	5560			**C612_2.8 P180 BN180M2**	151
1115	179	2.2	2.6	3860			**C512_2.6 P180 BN180M2**	147

30 kW

n2 min-1	M2 Nm	S	i	Rn2 N			IEC	
21.2	12584	1.0	69.4	61300			**C1003_69.4 P200 BN200L4**	164
25.6	10395	1.2	57.4	62200			**C1003_57.4 P200 BN200L4**	164
32	8379	1.4	46.2	62300			**C1003_46.2 P200 BN200L4**	164
37	7142	1.0	39.4	31900			**C903_39.4 P200 BN200L4**	161
50	5472	1.7	29.6	59800			**C1002_29.6 P200 BN200L4**	164
50	5450	1.1	29.4	32600			**C902_29.4 P200 BN200L4**	161
64	4243	1.5	22.9	32900			**C902_22.9 P200 BN200L4**	161
66	4119	2.4	22.2	57700			**C1002_22.2 P200 BN200L4**	164
79	3459	1.8	18.7	32600			**C902_18.7 P200 BN200L4**	161
79	3456	3.1	18.7	56000			**C1002_18.7 P200 BN200L4**	164

30 kW

n_2 min^{-1}	M_2 Nm	S	i	R_{n2} N			IEC	
99	2761	1.3	14.9	20600			**C802_14.9 P200 BN200L4**	158
106	2566	2.4	13.9	31500			**C902_13.9 P200 BN200L4**	161
122	2225	1.7	12.0	20500			**C802_12.0 P200 BN200L4**	158
131	2079	2.7	11.2	30600			**C902_11.2 P200 BN200L4**	161
153	1778	2.1	9.6	20100			**C802_9.6 P200 BN200L4**	158
154	1763	1.2	9.5	11000			**C702_9.5 P200 BN200L4**	155
184	1482	1.4	8.0	11600			**C702_8.0 P200 BN200L4**	155
193	1412	2.4	7.6	19500			**C802_7.6 P200 BN200L4**	158
209	1303	2.6	7.0	19300			**C802_7.0 P200 BN200L4**	158
235	1158	1.7	6.3	11500			**C702_6.3 P200 BN200L4**	155
241	1131	2.8	6.1	18900			**C802_6.1 P200 BN200L4**	158
261	1044	3.0	5.6	18600			**C802_5.6 P200 BN200L4**	158
322	846	2.0	4.6	11000			**C702_4.6 P200 BN200L4**	155

37 kW

n_2 min^{-1}	M_2 Nm	S	i	R_{n2} N			IEC (*)	
25.8	12734	0.9	57.4	55300			**C1003_57.4 P225 IEC225S4**	164
32	10264	1.2	46.2	56600			**C1003_46.2 P225 IEC225S4**	164
40	8201	1.4	36.9	57000			**C1003_36.9 P225 IEC225S4**	164
60	5631	1.2	24.8	29500			**C902_24.8 P225 IEC225S4**	161
61	5467	2.0	24.1	55200			**C1002_24.1 P225 IEC225S4**	164
79	4237	1.5	18.7	30100			**C902_18.7 P225 IEC225S4**	161
79	4234	2.5	18.7	53600			**C1002_18.7 P225 IEC225S4**	164
89	3779	0.9	16.7	18500			**C802_16.7 P225 IEC225S4**	158
107	3143	1.9	13.9	29700			**C902_13.9 P225 IEC225S4**	161
108	3122	1.1	13.8	18800			**C802_13.8 P225 IEC225S4**	158
123	2726	1.4	12.0	18800			**C802_12.0 P225 IEC225S4**	158
132	2546	2.2	11.2	29100			**C902_11.2 P225 IEC225S4**	161
154	2178	1.7	9.6	18800			**C802_9.6 P225 IEC225S4**	158
164	2046	2.5	9.0	28300			**C902_9.0 P225 IEC225S4**	161
194	1730	2.0	7.6	18500			**C802_7.6 P225 IEC225S4**	158
202	1661	2.9	7.3	27400			**C902_7.3 P225 IEC225S4**	161
242	1386	2.3	6.1	18000			**C802_6.1 P225 IEC225S4**	158
264	1271	3.5	5.6	26100			**C902_5.6 P225 IEC225S4**	161
286	1173	3.7	5.2	25700			**C902_5.2 P225 IEC225S4**	161

45 kW

n_2 min^{-1}	M_2 Nm	S	i	R_{n2} N			IEC (*)	
32	12483	1.0	46.2	50200			**C1003_46.2 P225 IEC225M4**	164
40	9974	1.2	36.9	51900			**C1003_36.9 P225 IEC225M4**	164
50	8153	1.1	29.6	51900			**C1002_29.6 P225 IEC225M4**	164
65	6322	1.0	22.9	26400			**C902_22.9 P225 IEC225M4**	161
67	6137	1.6	22.2	51700			**C1002_22.2 P225 IEC225M4**	164

***Die technischen Daten müssen als Anhaltswert betrachtet werden, die genaue Konfiguration muss mit den Daten der Motorenlieferanten für Motoren mit Leistungen größer als 30kW abgestimmt werden.**

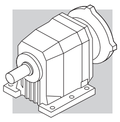

45 kW

n_2 min-1	M_2 Nm	S	i	R_{n2} N			IEC (*)	
79	5153	1.2	18.7	27200			**C902_18.7 P225 IEC225M4**	161
79	5149	2.1	18.7	51000			**C1002_18.7 P225 IEC225M4**	164
107	3822	1.6	13.9	27600			**C902_13.9 P225 IEC225M4**	161
108	3797	0.9	13.8	16700			**C802_13.8 P225 IEC225M4**	158
123	3315	1.1	12.0	17000			**C802_12.0 P225 IEC225M4**	158
132	3097	1.8	11.2	27400			**C902_11.2 P225 IEC225M4**	161
154	2649	1.4	9.6	17300			**C802_9.6 P225 IEC225M4**	158
164	2488	2.1	9.0	26900			**C902_9.0 P225 IEC225M4**	161
194	2104	1.6	7.6	17300			**C802_7.6 P225 IEC225M4**	158
202	2020	2.4	7.3	26300			**C902_7.3 P225 IEC225M4**	161
262	1556	2.0	5.6	17000			**C802_5.6 P225 IEC225M4**	158
264	1546	2.8	5.6	25200			**C902_5.6 P225 IEC225M4**	161
279	1464	2.9	5.2	25200			**C902_5.2 P225 IEC225M4**	161

55 kW

n_2 min-1	M_2 Nm	S	i	R_{n2} N			IEC (*)	
40	12191	1.0	36.9	45400			**C1003_36.9 P250 IEC250M4**	164
50	9965	0.9	29.6	46700			**C1002_29.6 P250 IEC250M4**	164
61	8126	1.3	24.1	47500			**C1002_24.1 P250 IEC250M4**	164
79	6298	1.0	18.7	22200			**C902_18.7 P250 IEC250M4**	161
79	6294	1.7	18.7	47700			**C1002_18.7 P250 IEC250M4**	164
107	4672	1.3	13.9	24900			**C902_13.9 P250 IEC250M4**	161
110	4549	2.1	13.5	46500			**C1002_13.5 P250 IEC250M4**	164
135	3686	2.4	10.9	45400			**C1002_10.9 P250 IEC250M4**	164
164	3050	2.7	9.0	44100			**C1002_9.0 P250 IEC250M4**	164
164	3041	1.7	9.0	25200			**C902_9.0 P250 IEC250M4**	161
202	2468	2.0	7.3	24900			**C902_7.3 P250 IEC250M4**	161
209	2383	3.2	7.1	42300			**C1002_7.1 P250 IEC250M4**	164
264	1889	2.3	5.6	24200			**C902_5.6 P250 IEC250M4**	161
286	1744	2.5	5.2	24000			**C902_5.2 P250 IEC250M4**	161

75 kW

n_2 min-1	M_2 Nm	S	i	R_{n2} N			IEC (*)	
62	11044	1.0	24.1	38100			**C1002_ 24.1 P280 IEC280S4**	164
67	10194	1.0	22.2	40000			**C1002_ 22.2 P280 IEC280S4**	164
73	9266	1.2	20.2	40500			**C1002_ 20.2 P280 IEC280S4**	164
80	8553	1.3	18.7	41100			**C1002_ 18.7 P280 IEC280S4**	164
90	7552	1.3	16.5	41400			**C1002_ 16.5 P280 IEC280S4**	164
98	6971	1.4	15.2	41800			**C1002_ 15.2 P280 IEC280S4**	164
110	6182	1.5	13.5	41700			**C1002_ 13.5 P280 IEC280S4**	164
119	5707	1.6	12.5	41800			**C1002_ 12.5 P280 IEC280S4**	164
136	5010	1.8	10.9	41500			**C1002_ 10.9 P280 IEC280S4**	164
147	4624	1.9	10.1	41400			**C1002_ 10.1 P280 IEC280S4**	164

***Die technischen Daten müssen als Anhaltswert betrachtet werden, die genaue Konfiguration muss mit den Daten der Motorenlieferanten für Motoren mit Leistungen größer als 30kW abgestimmt werden.**

75 kW

n_2 min^{-1}	M_2 Nm	S	i	R_{n2} N			IEC (*)	
164	4146	2.0	9.0	40900			**C1002_ 9.0 P280 IEC280S4**	164
178	3827	2.1	8.4	40600			**C1002_ 8.4 P280 IEC280S4**	164
210	3238	2.4	7.1	39700			**C1002_ 7.1 P280 IEC280S4**	164
228	2989	2.5	6.5	39300			**C1002_ 6.5 P280 IEC280S4**	164
278	2444	2.8	5.3	38100			**C1002_ 5.3 P280 IEC280S4**	164
302	2256	3.0	4.9	37600			**C1002_ 4.9 P280 IEC280S4**	164

90 kW

n_2 min^{-1}	M_2 Nm	S	i	R_{n2} N			IEC (*)	
73	11119	1.0	20.2	30600			**C1002_20.2 P280 IEC280M4**	164
80	10264	1.0	18.7	35500			**C1002_18.7 P280 IEC280M4**	164
90	9062	1.1	16.5	37100			**C1002_16.5 P280 IEC280M4**	164
98	8365	1.2	15.2	37800			**C1002_15.2 P280 IEC280M4**	164
110	7419	1.3	13.5	38100			**C1002_13.5 P280 IEC280M4**	164
119	6848	1.4	12.5	38500			**C1002_12.5 P280 IEC280M4**	164
136	6012	1.5	10.9	38600			**C1002_10.9 P280 IEC280M4**	164
147	5549	1.6	10.1	38700			**C1002_10.1 P280 IEC280M4**	164
164	4975	1.7	9.0	38500			**C1002_9.0 P280 IEC280M4**	164
178	4592	1.8	8.4	38400			**C1002_8.4 P280 IEC280M4**	164
210	3886	2.0	7.1	37800			**C1002_7.1 P280 IEC280M4**	164
228	3587	2.1	6.5	37600			**C1002_6.5 P280 IEC280M4**	164
278	2933	2.4	5.3	36600			**C1002_5.3 P280 IEC280M4**	164
302	2707	2.5	4.9	36300			**C1002_4.9 P280 IEC280M4**	164

***Die technischen Daten müssen als Anhaltswert betrachtet werden, die genaue Konfiguration muss mit den Daten der Motorenlieferanten für Motoren mit Leistungen größer als 30kW abgestimmt werden.**

C 12 100 Nm

	i	n_1 = 2800 min^{-1}					n_1 = 1400 min^{-1}					
		n_2 min^{-1}	M_{n2} Nm	P_{n1} kW	R_{n1} N	R_{n2} N	n_2 min^{-1}	M_{n2} Nm	P_{n1} kW	R_{n1} N	R_{n2} N	
C 12 2_2.8	2.8	1012	30	3.3	750	600	506	37	2.1	990	790	129
C 12 2_3.2	3.2	873	32	3.1	730	600	436	40	1.9	960	790	
C 12 2_3.7	3.7	767	34	2.9	720	610	383	42	1.8	960	800	
C 12 2_4.3	4.3	649	36	2.6	710	630	325	45	1.6	890	800	
C 12 2_4.9	4.9	575	38	2.4	710	640	288	48	1.5	880	800	
C 12 2_5.6	5.6	500	40	2.2	680	650	250	51	1.4	840	810	
C 12 2_6.2	6.2	449	42	2.1	650	660	225	53	1.3	810	830	
C 12 2_7.6	7.6	367	45	1.8	1140	1220	184	56	1.1	1300	1540	
C 12 2_8.8	8.8	317	47	1.6	1140	1280	158	59	1.0	1300	1620	
C 12 2_10.1	10.1	278	49	1.5	1150	1340	139	63	0.97	1300	1680	
C 12 2_11.9	11.9	236	53	1.4	1140	1390	118	67	0.87	1300	1760	
C 12 2_13.4	13.4	209	55	1.3	1140	1460	104	70	0.81	1300	1840	
C 12 2_15.4	15.4	182	58	1.2	1130	1500	91	73	0.73	1300	1930	
C 12 2_17.2	17.2	163	60	1.1	1130	1590	82	76	0.68	1300	2000	
C 12 2_18.4	18.4	152	62	1.0	1120	1620	76	78	0.65	1300	2000	
C 12 2_20.6	20.6	136	65	1.0	1110	1670	68	82	0.61	1300	2000	
C 12 2_23.2	23.2	120	67	0.89	1110	1720	60	85	0.56	1300	2000	
C 12 2_25.4	25.4	110	69	0.84	1110	1800	55	88	0.54	1300	2000	
C 12 2_29.5	29.5	95	74	0.77	1100	1880	47	93	0.49	1300	2000	
C 12 2_32.8	32.8	85	75	0.71	1090	1970	43	90	0.42	1300	2000	
C 12 2_37.0	37.0	76	79	0.66	1070	2000	38	90	0.38	1300	2000	
C 12 2_42.3	42.3	66	84	0.61	1060	2000	33	100	0.36	1300	2000	
C 12 2_47.6	47.6	59	85	0.55	1050	2000	29.4	90	0.29	1300	2000	
C 12 2_55.2	55.2	51	89	0.50	1030	2000	25.4	90	0.25	1300	2000	
C 12 2_66.2	66.2	42	86	0.40	1060	2000	21.2	90	0.21	1300	2000	

C 12 100 Nm

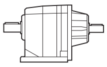	i	n_1 = 900 min^{-1}					n_1 = 500 min^{-1}					
		n_2 min^{-1}	M_{n2} Nm	P_{n1} kW	R_{n1} N	R_{n2} N	n_2 min^{-1}	M_{n2} Nm	P_{n1} kW	R_{n1} N	R_{n2} N	
C 12 2_2.8	2.8	325	43	1.5	1140	910	181	53	1.1	1300	1080	129
C 12 2_3.2	3.2	281	46	1.4	1100	910	156	57	1.0	1300	1080	
C 12 2_3.7	3.7	246	49	1.3	1090	920	137	60	0.91	1300	1100	
C 12 2_4.3	4.3	209	52	1.2	1050	920	116	64	0.82	1280	1100	
C 12 2_4.9	4.9	185	55	1.1	1050	960	103	67	0.76	1280	1160	
C 12 2_5.6	5.6	161	58	1.0	1000	980	89	69	0.68	1300	1280	
C 12 2_6.2	6.2	144	61	1.0	960	980	80	70	0.62	1300	1390	
C 12 2_7.6	7.6	118	65	0.85	1300	1780	66	79	0.57	1300	2000	
C 12 2_8.8	8.8	102	69	0.77	1300	1830	57	84	0.52	1300	2000	
C 12 2_10.1	10.1	89	72	0.71	1300	1950	50	88	0.48	1300	2000	
C 12 2_11.9	11.9	76	77	0.64	1300	2000	42	89	0.41	1300	2000	
C 12 2_13.4	13.4	67	81	0.60	1300	2000	37	90	0.37	1300	2000	
C 12 2_15.4	15.4	58	85	0.55	1300	2000	32	89	0.32	1300	2000	
C 12 2_17.2	17.2	52	88	0.51	1300	2000	29.1	90	0.29	1300	2000	
C 12 2_18.4	18.4	49	88	0.47	1300	2000	27.2	89	0.27	1300	2000	
C 12 2_20.6	20.6	44	89	0.43	1300	2000	24.2	89	0.24	1300	2000	
C 12 2_23.2	23.2	39	89	0.38	1300	2000	21.5	89	0.21	1300	2000	
C 12 2_25.4	25.4	35	89	0.35	1300	2000	19.7	89	0.19	1300	2000	
C 12 2_29.5	29.5	31	100	0.34	1300	2000	16.9	100	0.19	1300	2000	
C 12 2_32.8	32.8	27.5	90	0.27	1300	2000	15.3	90	0.15	1300	2000	
C 12 2_37.0	37.0	24.3	90	0.24	1300	2000	13.5	90	0.13	1300	2000	
C 12 2_42.3	42.3	21.3	100	0.23	1300	2000	11.8	100	0.13	1300	2000	
C 12 2_47.6	47.6	18.9	90	0.19	1300	2000	10.5	90	0.10	1300	2000	
C 12 2_55.2	55.2	16.3	90	0.16	1300	2000	9.1	90	0.09	1300	2000	
C 12 2_66.2	66.2	13.6	90	0.13	1300	2000	7.6	90	0.07	1300	2000	

C 22 200 Nm

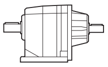	i	n_1 = 2800 min^{-1}					n_1 = 1400 min^{-1}					
		n_2 min^{-1}	M_{n2} Nm	P_{n1} kW	R_{n1} N	R_{n2} N	n_2 min^{-1}	M_{n2} Nm	P_{n1} kW	R_{n1} N	R_{n2} N	
C 22 2_2.7	2.7	1029	65	7.4	—	1150	514	80	4.5	—	1460	133
C 22 2_3.3	3.3	842	68	6.3	—	1230	421	85	3.9	—	1560	
C 22 2_3.7	3.7	755	70	5.8	—	1290	378	90	3.7	—	1610	
C 22 2_4.3	4.3	658	75	5.4	—	1320	329	94	3.4	—	1650	
C 22 2_4.8	4.8	587	80	5.2	—	1370	294	100	3.2	—	1730	
C 22 2_5.6	5.6	501	82	4.5	—	1410	250	102	2.8	—	1790	
C 22 2_6.1	6.1	460	85	4.3	—	1500	230	105	2.7	—	1900	
C 22 2_7.1	7.1	395	105	4.6	1090	1570	198	130	2.8	1420	1990	
C 22 2_8.7	8.7	324	110	3.9	1130	1680	162	138	2.5	1430	2090	
C 22 2_9.6	9.6	290	115	3.7	1160	1750	145	145	2.3	1460	2200	
C 22 2_11.1	11.1	253	120	3.3	1130	1820	126	153	2.1	1390	2270	
C 22 2_12.4	12.4	226	125	3.1	1160	1900	113	160	2.0	1420	2380	
C 22 2_14.5	14.5	193	133	2.8	1090	1980	96	168	1.8	1360	2450	
C 22 2_15.8	15.8	177	140	2.7	1030	2030	88	175	1.7	1320	2570	
C 22 2_18.1	18.1	154	145	2.5	1000	2140	77	183	1.6	1250	2650	
C 22 2_20.0	20.0	140	150	2.3	1000	2210	70	190	1.5	1250	2770	
C 22 2_21.5	21.5	131	153	2.2	970	2250	65	194	1.4	1190	2820	
C 22 2_24.3	24.3	115	160	2.0	980	2350	58	200	1.3	1250	2970	
C 22 2_27.2	27.2	103	166	1.9	960	2420	52	200	1.1	1340	3110	
C 22 2_29.6	29.6	95	175	1.8	850	2490	47	200	1.0	1350	3270	
C 22 2_33.1	33.1	85	178	1.7	840	2590	42	200	0.93	1390	3400	
C 22 2_36.8	36.8	76	185	1.6	750	2690	38	200	0.84	1400	3610	
C 22 2_43.3	43.3	65	185	1.3	830	2910	32	190	0.68	1610	3950	
C 22 2_48.6	48.6	58	150	0.95	1300	3300	28.8	155	0.49	1740	4400	
C 22 2_54.7	54.7	51	150	0.85	1320	3470	25.6	155	0.44	1770	4600	
C 22 2_63.3	63.3	44	125	0.61	1400	3860	22.1	130	0.32	1820	5000	
C 22 3_60.0	60.0	47	180	0.93	840	3400	23.3	190	0.49	1230	4500	
C 22 3_65.3	65.3	43	200	0.94	880	3440	21.4	200	0.47	1270	4670	
C 22 3_74.8	74.8	37	200	0.83	940	3600	18.7	200	0.41	1270	4800	
C 22 3_82.6	82.6	34	200	0.75	1010	3820	16.9	200	0.37	1300	5000	
C 22 3_88.5	88.5	32	200	0.70	1040	3900	15.8	200	0.35	1300	5000	
C 22 3_100.2	100.2	28.0	200	0.62	1090	4160	14.0	200	0.31	1300	5000	
C 22 3_112.0	112.0	25.0	200	0.55	1130	4300	12.5	200	0.28	1300	5000	
C 22 3_122.2	122.2	22.9	200	0.51	1160	4540	11.5	200	0.25	1300	5000	
C 22 3_136.5	136.5	20.5	200	0.45	1180	4700	10.3	200	0.23	1300	5000	
C 22 3_151.7	151.7	18.5	200	0.41	1220	4980	9.2	200	0.20	1300	5000	
C 22 3_178.5	178.5	15.7	200	0.35	1260	5000	7.8	200	0.17	1300	5000	
C 22 3_200.7	200.7	14.0	190	0.29	1280	5000	7.0	190	0.15	1300	5000	
C 22 3_225.8	225.8	12.4	180	0.25	1300	5000	6.2	185	0.13	1300	5000	
C 22 3_261.0	261.0	10.7	145	0.17	1300	5000	5.4	155	0.09	1300	5000	

(—) Nehmen Sie bitte Kontakt mit unserem Applikationsdienst auf und geben die Querkraftsdaten an (Drehrichtung, Orientierung, Anordnung)

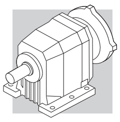

C 22 200 Nm

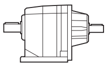	i	n_1 = 900 min^{-1}					n_1 = 500 min^{-1}					
		n_2 min^{-1}	M_{n2} Nm	P_{n1} kW	R_{n1} N	R_{n2} N	n_2 min^{-1}	M_{n2} Nm	P_{n1} kW	R_{n1} N	R_{n2} N	
C 22 2_2.7	2.7	331	95	3.5	—	1670	184	100	2.0	400	2150	133
C 22 2_3.3	3.3	271	100	3.0	—	1760	150	103	1.7	570	2300	
C 22 2_3.7	3.7	243	105	2.8	—	1850	135	105	1.6	800	2430	
C 22 2_4.3	4.3	211	105	2.4	—	1980	117	105	1.4	940	2550	
C 22 2_4.8	4.8	189	105	2.2	170	2090	105	105	1.2	1200	2710	
C 22 2_5.6	5.6	161	105	1.9	200	2250	89	112	1.1	1020	2850	
C 22 2_6.1	6.1	148	110	1.8	200	2290	82	116	1.1	980	2930	
C 22 2_7.1	7.1	127	150	2.1	1650	2310	71	180	1.4	2060	2820	
C 22 2_8.7	8.7	104	160	1.8	1650	2440	58	190	1.2	2100	3000	
C 22 2_9.6	9.6	93	170	1.7	1650	2530	52	200	1.1	2130	3130	
C 22 2_11.1	11.1	81	176	1.6	1640	2650	45	200	0.99	2170	3270	
C 22 2_12.4	12.4	73	185	1.5	1650	2760	40	200	0.89	2200	3520	
C 22 2_14.5	14.5	62	193	1.3	1610	2850	34	200	0.76	2200	3670	
C 22 2_15.8	15.8	57	200	1.3	1580	2990	32	200	0.70	2200	3920	
C 22 2_18.1	18.1	50	200	1.1	1650	3150	27.6	200	0.61	2200	4200	
C 22 2_20.0	20.0	45	200	0.99	1750	3340	25.0	200	0.55	2200	4350	
C 22 2_21.5	21.5	42	200	0.92	1760	3450	23.3	200	0.51	2200	4550	
C 22 2_24.3	24.3	37	200	0.82	1900	3650	20.6	200	0.45	2200	4720	
C 22 2_27.2	27.2	33	200	0.73	1950	3820	18.4	200	0.41	2200	5000	
C 22 2_29.6	29.6	30	200	0.67	1980	3990	16.9	200	0.37	2200	5000	
C 22 2_33.1	33.1	27.2	200	0.60	1970	4200	15.1	200	0.33	2200	5000	
C 22 2_36.8	36.8	24.5	200	0.54	1990	4390	13.6	200	0.30	2200	5000	
C 22 2_43.3	43.3	20.8	190	0.44	2020	4770	11.6	190	0.24	2200	5000	
C 22 2_48.6	48.6	18.5	160	0.33	2050	5000	10.3	170	0.19	2200	5000	
C 22 2_54.7	54.7	16.4	160	0.29	2090	5000	9.1	170	0.17	2200	5000	
C 22 2_63.3	63.3	14.2	135	0.21	2140	5000	7.9	140	0.12	2200	5000	
C 22 3_60.0	60.0	15.0	190	0.31	1300	5000	8.3	200	0.18	1300	5000	
C 22 3_65.3	65.3	13.8	200	0.31	1300	5000	7.7	200	0.17	1300	5000	
C 22 3_74.8	74.8	12.0	200	0.27	1300	5000	6.7	200	0.15	1300	5000	
C 22 3_82.6	82.6	10.9	200	0.25	1300	5000	6.1	200	0.14	1300	5000	
C 22 3_88.5	88.5	10.2	200	0.22	1300	5000	5.6	200	0.12	1300	5000	
C 22 3_100.2	100.2	9.0	200	0.20	1300	5000	5.0	200	0.11	1300	5000	
C 22 3_112.0	112.0	8.0	200	0.18	1300	5000	4.5	200	0.10	1300	5000	
C 22 3_122.2	122.2	7.4	200	0.17	1300	5000	4.1	200	0.09	1300	5000	
C 22 3_136.5	136.5	6.6	200	0.15	1300	5000	3.7	200	0.08	1300	5000	
C 22 3_151.7	151.7	5.9	200	0.13	1300	5000	3.3	200	0.07	1300	5000	
C 22 3_178.5	178.5	5.0	200	0.11	1300	5000	2.8	200	0.06	1300	5000	
C 22 3_200.7	200.7	4.5	195	0.10	1300	5000	2.5	200	0.05	1300	5000	
C 22 3_225.8	225.8	4.0	195	0.09	1300	5000	2.2	200	0.05	1300	5000	
C 22 3_261.0	261.0	3.4	160	0.06	1300	5000	1.9	165	0.04	1300	5000	

(—) Nehmen Sie bitte Kontakt mit unserem Applikationsdienst auf und geben die Querkraftsdaten an (Drehrichtung, Orientierung, Anordnung)

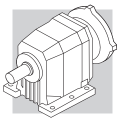

C 32 300 Nm

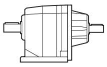	i	n_1 = 2800 min⁻¹					n_1 = 1400 min⁻¹					
		n_2 min⁻¹	M_{n2} Nm	P_{n1} kW	R_{n1} N	R_{n2} N	n_2 min⁻¹	M_{n2} Nm	P_{n1} kW	R_{n1} N	R_{n2} N	
C 32 2_2.9	2.9	973	105	11.3	670	1710	486	130	7.0	940	2170	137
C 32 2_3.4	3.4	821	116	10.5	480	1770	411	138	6.2	900	2280	
C 32 2_3.7	3.7	750	120	9.9	560	1830	375	150	6.2	750	2310	
C 32 2_4.5	4.5	622	129	8.8	450	1930	311	152	5.2	970	2500	
C 32 2_5.0	5.0	565	135	8.4	470	1990	283	155	4.8	1100	2600	
C 32 2_5.7	5.7	495	141	7.7	380	2080	248	155	4.2	1250	2760	
C 32 2_6.3	6.3	447	150	7.4	300	2130	223	155	3.8	1450	2890	
C 32 2_7.2	7.2	391	160	6.9	1890	2370	195	200	4.3	2200	2990	
C 32 2_8.5	8.5	330	168	6.1	1900	2510	165	209	3.8	2200	3180	
C 32 2_9.3	9.3	301	175	5.8	1910	2580	151	220	3.7	2200	3260	
C 32 2_11.2	11.2	250	187	5.2	1910	2740	125	231	3.2	2200	3480	
C 32 2_12.3	12.3	227	195	4.9	1910	2820	114	245	3.1	2200	3560	
C 32 2_14.1	14.1	199	205	4.5	1900	2940	99	251	2.8	2200	3750	
C 32 2_15.6	15.6	180	215	4.3	1900	3030	90	270	2.7	2200	3820	
C 32 2_18.2	18.2	154	223	3.8	1900	3210	77	275	2.3	2200	4070	
C 32 2_20.1	20.1	139	235	3.6	1900	3290	70	295	2.3	2200	4160	
C 32 2_22.9	22.9	122	240	3.2	1880	3470	61	295	2.0	2200	4400	
C 32 2_25.1	25.1	111	250	3.1	1890	3560	56	300	1.8	2200	4570	
C 32 2_26.9	26.9	104	255	2.9	1880	3650	52	300	1.7	2200	4700	
C 32 2_29.8	29.8	94	265	2.7	1880	3770	47	300	1.6	2200	4920	
C 32 2_33.1	33.1	85	270	2.5	1880	3920	42	300	1.4	2200	5150	
C 32 2_36.1	36.1	78	280	2.4	1870	4030	39	300	1.3	2200	5350	
C 32 2_40.7	40.7	69	290	2.2	1860	4200	34	300	1.1	2200	5500	
C 32 2_45.3	45.3	62	300	2.0	1860	4360	31	300	1.0	2200	5500	
C 32 2_52.4	52.4	53	300	1.8	1860	4650	26.7	300	0.88	2200	5500	
C 32 2_59.4	59.4	47	205	1.1	2020	5000	23.6	215	0.56	2200	5500	
C 32 2_66.8	66.8	42	205	0.95	2020	5500	21.0	215	0.50	2200	5500	
C 32 3_74.7	74.7	37	280	1.2	750	5500	18.7	290	0.60	1170	5500	
C 32 3_82.6	82.6	34	300	1.1	820	5500	17.0	300	0.56	1240	5500	
C 32 3_94.2	94.2	29.7	300	0.98	900	5500	14.9	300	0.49	1270	5500	
C 32 3_103.3	103.3	27.1	300	0.90	980	5500	13.6	300	0.45	1300	5500	
C 32 3_110.6	110.6	25.3	300	0.84	1000	5500	12.7	300	0.42	1300	5500	
C 32 3_122.4	122.4	22.9	300	0.76	1060	5500	11.4	300	0.38	1300	5500	
C 32 3_136.0	136.0	20.6	300	0.68	1110	5500	10.3	300	0.34	1300	5500	
C 32 3_148.4	148.4	18.9	300	0.62	1130	5500	9.4	300	0.31	1300	5500	
C 32 3_167.4	167.4	16.7	300	0.55	1180	5500	8.4	300	0.28	1300	5500	
C 32 3_186.0	186.0	15.1	300	0.50	1200	5500	7.5	300	0.25	1300	5500	
C 32 3_215.6	215.6	13.0	300	0.43	1240	5500	6.5	300	0.21	1300	5500	
C 32 3_244.2	244.2	11.5	240	0.30	1280	5500	5.7	255	0.16	1300	5500	
C 32 3_274.7	274.7	10.2	240	0.27	1300	5500	5.1	255	0.14	1300	5500	

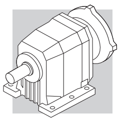

C 32 300 Nm

	i	n_1 = 900 min^{-1}					n_1 = 500 min^{-1}					
		n_2 min^{-1}	M_{n2} Nm	P_{n1} kW	R_{n1} N	R_{n2} N	n_2 min^{-1}	M_{n2} Nm	P_{n1} kW	R_{n1} N	R_{n2} N	
C 32 2_2.9	2.9	313	150	5.2	1120	2510	174	155	3.0	2200	3220	137
C 32 2_3.4	3.4	264	152	4.4	1390	2690	147	167	2.7	2200	3390	
C 32 2_3.7	3.7	241	155	4.1	1570	2790	134	175	2.6	2200	3480	
C 32 2_4.5	4.5	200	158	3.5	1750	3010	111	188	2.3	2200	3690	
C 32 2_5.0	5.0	182	162	3.2	1870	3120	101	198	2.2	2200	3790	
C 32 2_5.7	5.7	159	171	3.0	1730	3250	88	198	1.9	2200	4010	
C 32 2_6.3	6.3	144	178	2.8	1730	3350	80	200	1.8	2200	4180	
C 32 2_7.2	7.2	126	235	3.3	2200	3450	70	285	2.2	2200	4200	
C 32 2_8.5	8.5	106	246	2.9	2200	3660	59	288	1.9	2200	4520	
C 32 2_9.3	9.3	97	260	2.8	2200	3750	54	300	1.8	2200	4640	
C 32 2_11.2	11.2	80	272	2.4	2200	4010	45	300	1.5	2200	5030	
C 32 2_12.3	12.3	73	285	2.3	2200	4120	41	300	1.3	2200	5250	
C 32 2_14.1	14.1	64	290	2.0	2200	4340	36	300	1.2	2200	5500	
C 32 2_15.6	15.6	58	300	1.9	2200	4500	32	300	1.1	2200	5500	
C 32 2_18.2	18.2	50	300	1.6	2200	4810	27.5	300	0.91	2200	5500	
C 32 2_20.1	20.1	45	300	1.5	2200	5030	24.9	300	0.82	2200	5500	
C 32 2_22.9	22.9	39	300	1.3	2200	5300	21.8	300	0.72	2200	5500	
C 32 2_25.1	25.1	36	300	1.2	2200	5500	19.9	300	0.66	2200	5500	
C 32 2_26.9	26.9	33	300	1.1	2200	5500	18.6	300	0.61	2200	5500	
C 32 2_29.8	29.8	30	300	1.0	2200	5500	16.8	300	0.56	2200	5500	
C 32 2_33.1	33.1	27.2	300	0.90	2200	5500	15.1	300	0.50	2200	5500	
C 32 2_36.1	36.1	24.9	300	0.82	2200	5500	13.9	300	0.46	2200	5500	
C 32 2_40.7	40.7	22.1	300	0.73	2200	5500	12.3	300	0.41	2200	5500	
C 32 2_45.3	45.3	19.9	300	0.66	2200	5500	11.0	300	0.37	2200	5500	
C 32 2_52.4	52.4	17.2	300	0.57	2200	5500	9.5	300	0.32	2200	5500	
C 32 2_59.4	59.4	15.2	220	0.37	2200	5500	8.4	230	0.21	2200	5500	
C 32 2_66.8	66.8	13.5	220	0.33	2200	5500	7.5	230	0.19	2200	5500	
C 32 3_74.7	74.7	12.0	290	0.38	1300	5500	6.7	300	0.22	1300	5500	
C 32 3_82.6	82.6	10.9	300	0.36	1300	5500	6.1	300	0.20	1300	5500	
C 32 3_94.2	94.2	9.6	300	0.32	1300	5500	5.3	300	0.18	1300	5500	
C 32 3_103.3	103.3	8.7	300	0.29	1300	5500	4.8	300	0.16	1300	5500	
C 32 3_110.6	110.6	8.1	300	0.27	1300	5500	4.5	300	0.15	1300	5500	
C 32 3_122.4	122.4	7.4	300	0.24	1300	5500	4.1	300	0.14	1300	5500	
C 32 3_136.0	136.0	6.6	300	0.22	1300	5500	3.7	300	0.12	1300	5500	
C 32 3_148.4	148.4	6.1	300	0.20	1300	5500	3.4	300	0.11	1300	5500	
C 32 3_167.4	167.4	5.4	300	0.18	1300	5500	3.0	300	0.10	1300	5500	
C 32 3_186.0	186.0	4.8	300	0.16	1300	5500	2.7	300	0.09	1300	5500	
C 32 3_215.6	215.6	4.2	300	0.14	1300	5500	2.3	300	0.08	1300	5500	
C 32 3_244.2	244.2	3.7	260	0.11	1300	5500	2.0	275	0.06	1300	5500	
C 32 3_274.7	274.7	3.3	260	0.09	1300	5500	1.8	275	0.06	1300	5500	

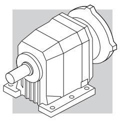

C 36 450 Nm

	i	n_1 = 2800 min⁻¹					n_1 = 1400 min⁻¹					
		n_2 min⁻¹	M_{n2} Nm	P_{n1} kW	R_{n1} N	R_{n2} N	n_2 min⁻¹	M_{n2} Nm	P_{n1} kW	R_{n1} N	R_{n2} N	
C 36 2_2.7	2.7	1042	140	16.1	670	1750	521	170	9.8	1150	2240	141
C 36 2_3.2	3.2	880	145	14.1	790	1870	440	177	8.6	1240	2380	
C 36 2_3.5	3.5	803	150	13.3	910	1920	402	185	8.2	1320	2440	
C 36 2_4.2	4.2	667	157	11.5	920	2050	333	192	7.1	1410	2620	
C 36 2_4.6	4.6	606	165	11.0	920	2110	303	200	6.7	1470	2700	
C 36 2_5.3	5.3	530	167	9.8	990	2230	265	200	5.8	1650	2870	
C 36 2_5.8	5.8	479	170	9.0	1160	2330	239	200	5.3	1990	3020	
C 36 2_6.8	6.8	413	285	13.0	1750	2130	206	355	8.1	2220	2710	
C 36 2_8.0	8.0	349	297	11.4	1770	2270	174	365	7.0	2250	2910	
C 36 2_8.8	8.8	318	310	10.9	1780	2330	159	380	6.7	2270	3000	
C 36 2_10.6	10.6	264	325	9.5	1790	2500	132	380	5.5	2320	3290	
C 36 2_11.7	11.7	240	340	9.0	1790	2560	120	380	5.0	2370	3460	
C 36 2_13.3	13.3	210	350	8.1	1800	2700	105	380	4.4	2400	3670	
C 36 2_14.8	14.8	190	360	7.5	1800	2810	95	380	4.0	2440	3890	
C 36 2_17.2	17.2	163	370	6.6	1810	3000	81	380	3.4	2460	4200	
C 36 2_19.0	19.0	147	380	6.2	1820	3110	74	380	3.1	2500	4400	
C 36 3_22.1	22.1	127	340	4.7	2300	3570	63	430	3.0	2900	4490	
C 36 3_26.2	26.2	107	355	4.2	2300	3790	53	440	2.6	2910	4810	
C 36 3_28.7	28.7	98	385	4.1	2300	3820	49	450	2.4	2930	4980	
C 36 3_34.6	34.6	81	400	3.6	2300	4100	40	450	2.0	2950	5420	
C 36 3_38.1	38.1	74	435	3.5	2300	4140	37	450	1.8	2970	5690	
C 36 3_43.5	43.5	64	440	3.1	2300	4450	32	450	1.6	2980	6050	
C 36 3_48.2	48.2	58	450	2.9	2310	4580	29.1	450	1.4	2990	6330	
C 36 3_56.2	56.2	50	450	2.5	2320	4970	24.9	450	1.2	2990	6500	
C 36 3_62.0	62.0	45	450	2.2	2330	5170	22.6	450	1.1	3000	6500	
C 36 3_70.8	70.8	40	450	2.0	2340	5520	19.8	450	0.98	3000	6500	
C 36 3_77.6	77.6	36	450	1.8	2350	5740	18.0	450	0.90	3000	6500	
C 36 3_83.1	83.1	34	450	1.7	2350	5930	16.8	450	0.84	3000	6500	
C 36 3_91.9	91.9	30	450	1.5	2360	6200	15.2	450	0.76	3000	6500	
C 36 3_102.2	102.2	27.4	450	1.4	2360	6400	13.7	450	0.68	3000	6500	
C 36 3_111.5	111.5	25.1	450	1.2	2360	6500	12.6	450	0.62	3000	6500	
C 36 3_125.8	125.8	22.3	450	1.1	2370	6500	11.1	450	0.55	3000	6500	
C 36 3_139.8	139.8	20.0	450	0.99	2370	6500	10.0	450	0.50	3000	6500	
C 36 3_162.0	162.0	17.3	450	0.86	2380	6500	8.6	450	0.43	3000	6500	
C 36 3_183.5	183.5	15.3	450	0.76	2380	6500	7.6	450	0.38	3000	6500	
C 36 3_206.4	206.4	13.6	450	0.67	2380	6500	6.8	450	0.34	3000	6500	
C 36 4_230.9	230.9	12.1	450	0.60	1150	6500	6.1	450	0.30	1300	6500	
C 36 4_255.0	255.0	11.0	450	0.54	1190	6500	5.5	450	0.27	1300	6500	
C 36 4_290.9	290.9	9.6	450	0.48	1210	6500	4.8	450	0.24	1300	6500	
C 36 4_318.9	318.9	8.8	450	0.44	1230	6500	4.4	450	0.22	1300	6500	
C 36 4_341.7	341.7	8.2	450	0.41	1240	6500	4.1	450	0.20	1300	6500	
C 36 4_377.9	377.9	7.4	450	0.37	1260	6500	3.7	450	0.18	1300	6500	
C 36 4_420.2	420.2	6.7	450	0.33	1270	6500	3.3	450	0.17	1300	6500	
C 36 4_458.4	458.4	6.1	450	0.30	1280	6500	3.1	450	0.15	1300	6500	
C 36 4_517.2	517.2	5.4	450	0.27	1300	6500	2.7	450	0.13	1300	6500	
C 36 4_574.7	574.7	4.9	450	0.24	1300	6500	2.4	450	0.12	1300	6500	
C 36 4_665.9	665.9	4.2	450	0.21	1300	6500	2.1	450	0.10	1300	6500	
C 36 4_754.2	754.2	3.7	450	0.18	1300	6500	1.9	450	0.09	1300	6500	
C 36 4_848.5	848.5	3.3	450	0.16	1300	6500	1.6	450	0.08	1300	6500	

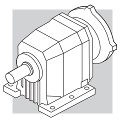

C 36 450 Nm

	i	n_1 = 900 min^{-1}					n_1 = 500 min^{-1}					
		n_2	M_{n2}	P_{n1}	R_{n1}	R_{n2}	n_2	M_{n2}	P_{n1}	R_{n1}	R_{n2}	
		min^{-1}	Nm	kW	N	N	min^{-1}	Nm	kW	N	N	
C 36 2_2.7	2.7	335	190	7.0	1670	2640	186	200	4.1	3000	3390	141
C 36 2_3.2	3.2	283	190	5.9	2080	2790	157	200	3.5	3000	3650	
C 36 2_3.5	3.5	258	200	5.7	2160	2920	143	200	3.2	3000	3810	
C 36 2_4.2	4.2	214	200	4.7	2410	3170	119	200	2.6	3000	4100	
C 36 2_4.6	4.6	195	200	4.3	2590	3320	108	200	2.4	3000	4300	
C 36 2_5.3	5.3	171	200	3.8	2630	3500	95	200	2.1	3000	4520	
C 36 2_5.8	5.8	154	200	3.4	2680	3690	86	200	1.9	3000	4740	
C 36 2_6.8	6.8	133	380	5.6	2660	3290	74	380	3.1	3000	4400	
C 36 2_8.0	8.0	112	380	4.7	2720	3580	62	380	2.6	3000	4750	
C 36 2_8.8	8.8	102	380	4.3	2790	3750	57	380	2.4	3000	4960	
C 36 2_10.6	10.6	85	380	3.6	2850	4110	47	380	2.0	3000	5360	
C 36 2_11.7	11.7	77	380	3.2	2900	4300	43	380	1.8	3000	5630	
C 36 2_13.3	13.3	68	380	2.8	2930	4590	38	380	1.6	3000	5930	
C 36 2_14.8	14.8	61	380	2.6	2970	4800	34	380	1.4	3000	6240	
C 36 2_17.2	17.2	52	380	2.2	2980	5100	29.1	380	1.2	3000	6330	
C 36 2_19.0	19.0	47	380	2.0	3000	5390	26.3	380	1.1	3000	6500	
C 36 3_22.1	22.1	41	450	2.0	3000	5430	22.6	450	1.1	3000	6500	
C 36 3_26.2	26.2	34	450	1.7	3000	5850	19.1	450	0.95	3000	6500	
C 36 3_28.7	28.7	31	450	1.6	3000	6120	17.4	450	0.86	3000	6500	
C 36 3_34.6	34.6	26.0	450	1.3	3000	6500	14.5	450	0.72	3000	6500	
C 36 3_38.1	38.1	23.6	450	1.2	3000	6500	13.1	450	0.65	3000	6500	
C 36 3_43.5	43.5	20.7	450	1.0	3000	6500	11.5	450	0.57	3000	6500	
C 36 3_48.2	48.2	18.7	450	0.93	3000	6500	10.4	450	0.52	3000	6500	
C 36 3_56.2	56.2	16.0	450	0.79	3000	6500	8.9	450	0.44	3000	6500	
C 36 3_62.0	62.0	14.5	450	0.72	3000	6500	8.1	450	0.40	3000	6500	
C 36 3_70.8	70.8	12.7	450	0.63	3000	6500	7.1	450	0.35	3000	6500	
C 36 3_77.6	77.6	11.6	450	0.58	3000	6500	6.4	450	0.32	3000	6500	
C 36 3_83.1	83.1	10.8	450	0.54	3000	6500	6.0	450	0.30	3000	6500	
C 36 3_91.9	91.9	9.8	450	0.49	3000	6500	5.4	450	0.27	3000	6500	
C 36 3_102.2	102.2	8.8	450	0.44	3000	6500	4.9	450	0.24	3000	6500	
C 36 3_111.5	111.5	8.1	450	0.40	3000	6500	4.5	450	0.22	3000	6500	
C 36 3_125.8	125.8	7.2	450	0.35	3000	6500	4.0	450	0.20	3000	6500	
C 36 3_139.8	139.8	6.4	450	0.32	3000	6500	3.6	450	0.18	3000	6500	
C 36 3_162.0	162.0	5.6	450	0.28	3000	6500	3.1	450	0.15	3000	6500	
C 36 3_183.5	183.5	4.9	450	0.24	3000	6500	2.7	450	0.14	3000	6500	
C 36 3_206.4	206.4	4.4	450	0.22	3000	6500	2.4	450	0.12	3000	6500	
C 36 4_230.9	230.9	3.9	450	0.19	1300	6500	2.2	450	0.11	1300	6500	
C 36 4_255.0	255.0	3.5	450	0.18	1300	6500	2.0	450	0.10	1300	6500	
C 36 4_290.9	290.9	3.1	450	0.15	1300	6500	1.7	450	0.09	1300	6500	
C 36 4_318.9	318.9	2.8	450	0.14	1300	6500	1.6	450	0.08	1300	6500	
C 36 4_341.7	341.7	2.6	450	0.13	1300	6500	1.5	450	0.07	1300	6500	
C 36 4_377.9	377.9	2.4	450	0.12	1300	6500	1.3	450	0.07	1300	6500	
C 36 4_420.2	420.2	2.1	450	0.11	1300	6500	1.2	450	0.06	1300	6500	
C 36 4_458.4	458.4	2.0	450	0.10	1300	6500	1.1	450	0.05	1300	6500	
C 36 4_517.2	517.2	1.7	450	0.09	1300	6500	1.0	450	0.05	1300	6500	
C 36 4_574.7	574.7	1.6	450	0.08	1300	6500	0.9	450	0.04	1300	6500	
C 36 4_665.9	665.9	1.4	450	0.07	1300	6500	0.8	450	0.04	1300	6500	
C 36 4_754.2	754.2	1.2	450	0.06	1300	6500	0.7	450	0.03	1300	6500	
C 36 4_848.5	848.5	1.1	450	0.05	1300	6500	0.6	450	0.03	1300	6500	

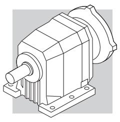

C 41 600 Nm

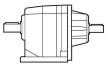	i	n_1 = 2800 min^{-1} n_2 min^{-1}	M_{n2} Nm	P_{n1} kW	R_{n1} N	R_{n2} N	n_1 = 1400 min^{-1} n_2 min^{-1}	M_{n2} Nm	P_{n1} kW	R_{n1} N	R_{n2} N	
C 41 2_2.7	2.7	1037	245	28	980	1290	519	245	14.0	1390	2060	145
C 41 2_3.6	3.6	778	255	22	1070	1540	389	255	10.9	1650	2390	
C 41 2_4.7	4.7	596	260	17.1	1170	1800	298	260	8.5	2010	2730	
C 41 2_6.0	6.0	467	260	13.4	1290	2100	233	260	6.7	2400	3110	
C 41 2_6.4	6.4	438	275	13.3	2270	2590	219	345	8.3	2860	3260	
C 41 2_7.1	7.1	394	285	12.4	2360	2700	197	355	7.7	2980	3420	
C 41 2_8.6	8.6	326	305	10.9	2300	2860	163	385	6.9	2900	3600	
C 41 2_9.6	9.6	292	310	10.0	2410	3010	146	390	6.3	3030	3800	
C 41 2_11.2	11.2	250	335	9.2	2310	3100	125	420	5.8	2910	3920	
C 41 2_12.4	12.4	226	340	8.5	2440	3270	113	425	5.3	3070	4140	
C 41 2_14.2	14.2	197	355	7.7	2330	3410	99	445	4.8	2980	4300	
C 41 2_15.8	15.8	177	360	7.0	2460	3590	89	450	4.4	3120	4540	
C 41 2_17.8	17.8	157	380	6.6	2330	3680	79	480	4.2	3050	4630	
C 41 2_19.8	19.8	141	385	6.0	2460	3880	71	485	3.8	3180	4890	
C 41 2_22.6	22.6	124	410	5.6	2320	3990	62	500	3.4	3110	5110	
C 41 2_25.0	25.0	112	415	5.1	2460	4210	56	500	3.1	3230	5420	
C 41 2_28.3	28.3	99	445	4.9	2310	4290	49	500	2.7	3180	5710	
C 41 2_31.4	31.4	89	445	4.4	2440	4550	45	500	2.5	3300	6040	
C 41 2_33.4	33.4	84	465	4.3	2390	4560	42	500	2.3	3220	6170	
C 41 2_37.1	37.1	75	470	3.9	2440	4810	38	500	2.1	3320	6520	
C 41 2_44.8	44.8	63	500	3.4	2660	5130	31	500	1.7	3500	7000	
C 41 3_28.5	28.5	98	445	4.9	3060	4300	49	560	3.1	3500	5420	
C 41 3_31.2	31.2	90	450	4.5	3090	4510	45	570	2.9	3500	5670	
C 41 3_36.8	36.8	76	480	4.1	3070	4710	38	600	2.6	3500	5960	
C 41 3_40.3	40.3	69	485	3.8	3100	4940	35	600	2.3	3500	6280	
C 41 3_47.0	47.0	60	515	3.5	3070	5140	29.8	600	2.0	3500	6720	
C 41 3_51.5	51.5	54	525	3.2	3090	5360	27.2	600	1.8	3500	7000	
C 41 3_58.7	58.7	48	550	3.0	3070	5550	23.9	600	1.6	3500	7000	
C 41 3_64.3	64.3	44	560	2.7	3090	5800	21.8	600	1.5	3500	7000	
C 41 3_74.4	74.4	38	590	2.5	3060	6040	18.8	600	1.3	3500	7000	
C 41 3_81.5	81.5	34	600	2.3	3090	6310	17.2	600	1.2	3500	7000	
C 41 3_93.3	93.3	30	600	2.0	3080	6700	15.0	600	1.0	3500	7000	
C 41 3_102.3	102.3	27.4	600	1.8	3110	7000	13.7	600	0.92	3500	7000	
C 41 3_110.1	110.1	25.4	600	1.7	3090	7000	12.7	600	0.86	3500	7000	
C 41 3_120.6	120.6	23.2	600	1.6	3110	7000	11.6	600	0.78	3500	7000	
C 41 3_132.9	132.9	21.1	600	1.4	3090	7000	10.5	600	0.71	3500	7000	
C 41 3_145.6	145.6	19.2	600	1.3	3120	7000	9.6	600	0.65	3500	7000	
C 41 3_164.1	164.1	17.1	600	1.2	3100	7000	8.5	600	0.58	3500	7000	
C 41 3_179.9	179.9	15.6	600	1.1	3120	7000	7.8	600	0.53	3500	7000	
C 41 3_190.8	190.8	14.7	600	0.99	3110	7000	7.3	600	0.50	3500	7000	
C 41 3_209.1	209.1	13.4	600	0.90	3130	7000	6.7	600	0.45	3500	7000	
C 41 4_239.9	239.9	11.7	600	0.81	1480	7000	5.8	600	0.40	1910	7000	
C 41 4_263.0	263.0	10.6	600	0.74	1500	7000	5.3	600	0.37	1920	7000	
C 41 4_304.2	304.2	9.2	600	0.64	1520	7000	4.6	600	0.32	1950	7000	
C 41 4_333.4	333.4	8.4	600	0.58	1530	7000	4.2	600	0.29	1960	7000	
C 41 4_381.8	381.8	7.3	600	0.51	1540	7000	3.7	600	0.25	1970	7000	
C 41 4_418.5	418.5	6.7	600	0.46	1550	7000	3.3	600	0.23	1980	7000	
C 41 4_450.2	450.2	6.2	600	0.43	1560	7000	3.1	600	0.21	1990	7000	
C 41 4_493.5	493.5	5.7	600	0.39	1570	7000	2.8	600	0.20	2000	7000	
C 41 4_543.5	543.5	5.2	600	0.36	1570	7000	2.6	600	0.18	2000	7000	
C 41 4_595.8	595.8	4.7	600	0.32	1580	7000	2.3	600	0.16	2010	7000	
C 41 4_671.3	671.3	4.2	600	0.29	1590	7000	2.1	600	0.14	2020	7000	
C 41 4_735.9	735.9	3.8	600	0.26	1590	7000	1.9	600	0.13	2020	7000	
C 41 4_780.4	780.4	3.6	600	0.25	1600	7000	1.8	600	0.12	2030	7000	
C 41 4_855.5	855.5	3.3	600	0.23	1600	7000	1.6	600	0.11	2030	7000	

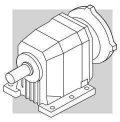

C 41 600 Nm

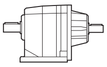	i	n_1 = 900 min^{-1}					n_1 = 500 min^{-1}					
		n_2	M_{n2}	P_{n1}	R_{n1}	R_{n2}	n_2	M_{n2}	P_{n1}	R_{n1}	R_{n2}	
		min^{-1}	Nm	kW	N	N	min^{-1}	Nm	kW	N	N	
C 41 2_2.7	2.7	333	245	9.0	2560	2650	185	245	5.0	3500	3590	145
C 41 2_3.6	3.6	250	255	7.0	2710	3050	139	255	3.9	3500	4090	
C 41 2_4.7	4.7	191	260	5.5	2900	3440	106	260	3.0	3500	4570	
C 41 2_6.0	6.0	150	260	4.3	3080	3890	83	260	2.4	3500	5110	
C 41 2_6.4	6.4	141	400	6.2	3310	3780	78	490	4.2	3500	4580	
C 41 2_7.1	7.1	127	415	5.8	3460	3940	70	500	3.9	3500	4820	
C 41 2_8.6	8.6	105	445	5.1	3360	4180	58	500	3.2	3500	5290	
C 41 2_9.6	9.6	94	450	4.7	3500	4410	52	500	2.9	3500	5600	
C 41 2_11.2	11.2	80	490	4.3	3500	4520	45	500	2.5	3500	5980	
C 41 2_12.4	12.4	73	495	4.0	3500	4780	40	500	2.2	3500	6320	
C 41 2_14.2	14.2	63	500	3.5	3500	5060	35	500	1.9	3500	6700	
C 41 2_15.8	15.8	57	500	3.1	3500	5370	32	500	1.7	3500	7000	
C 41 2_17.8	17.8	51	500	2.8	3500	5650	28.1	500	1.5	3500	7000	
C 41 2_19.8	19.8	45	500	2.5	3500	5970	25.3	500	1.4	3500	7000	
C 41 2_22.6	22.6	40	500	2.2	3500	6320	22.1	500	1.2	3500	7000	
C 41 2_25.0	25.0	36	500	2.0	3500	6670	20.0	500	1.1	3500	7000	
C 41 2_28.3	28.3	32	500	1.8	3500	7000	17.7	500	0.97	3500	7000	
C 41 2_31.4	31.4	28.7	500	1.6	3500	7000	15.9	500	0.88	3500	7000	
C 41 2_33.4	33.4	26.9	500	1.5	3500	7000	15.0	500	0.83	3500	7000	
C 41 2_37.1	37.1	24.3	500	1.3	3500	7000	13.5	500	0.74	3500	7000	
C 41 2_44.8	44.8	20.1	500	1.1	3500	7000	11.2	500	0.62	3500	7000	
C 41 3_28.5	28.5	32	600	2.1	3500	6530	17.5	600	1.2	3500	7000	
C 41 3_31.2	31.2	28.8	600	1.9	3500	6870	16.0	600	1.1	3500	7000	
C 41 3_36.8	36.8	24.5	600	1.7	3500	7000	13.6	600	0.92	3500	7000	
C 41 3_40.3	40.3	22.3	600	1.5	3500	7000	12.4	600	0.84	3500	7000	
C 41 3_47.0	47.0	19.1	600	1.3	3500	7000	10.6	600	0.72	3500	7000	
C 41 3_51.5	51.5	17.5	600	1.2	3500	7000	9.7	600	0.66	3500	7000	
C 41 3_58.7	58.7	15.3	600	1.0	3500	7000	8.5	600	0.58	3500	7000	
C 41 3_64.3	64.3	14.0	600	0.95	3500	7000	7.8	600	0.53	3500	7000	
C 41 3_74.4	74.4	12.1	600	0.82	3500	7000	6.7	600	0.45	3500	7000	
C 41 3_81.5	81.5	11.0	600	0.75	3500	7000	6.1	600	0.41	3500	7000	
C 41 3_93.3	93.3	9.6	600	0.65	3500	7000	5.4	600	0.36	3500	7000	
C 41 3_102.3	102.3	8.8	600	0.59	3500	7000	4.9	600	0.33	3500	7000	
C 41 3_110.1	110.1	8.2	600	0.55	3500	7000	4.5	600	0.31	3500	7000	
C 41 3_120.6	120.6	7.5	600	0.50	3500	7000	4.1	600	0.28	3500	7000	
C 41 3_132.9	132.9	6.8	600	0.46	3500	7000	3.8	600	0.25	3500	7000	
C 41 3_145.6	145.6	6.2	600	0.42	3500	7000	3.4	600	0.23	3500	7000	
C 41 3_164.1	164.1	5.5	600	0.37	3500	7000	3.0	600	0.21	3500	7000	
C 41 3_179.9	179.9	5.0	600	0.34	3500	7000	2.8	600	0.19	3500	7000	
C 41 3_190.8	190.8	4.7	600	0.32	3500	7000	2.6	600	0.18	3500	7000	
C 41 3_209.1	209.1	4.3	600	0.29	3500	7000	2.4	600	0.16	3500	7000	
C 41 4_239.9	239.9	3.8	600	0.26	2200	7000	2.1	600	0.14	2200	7000	
C 41 4_263.0	263.0	3.4	600	0.24	2200	7000	1.9	600	0.13	2200	7000	
C 41 4_304.2	304.2	3.0	600	0.20	2200	7000	1.6	600	0.11	2200	7000	
C 41 4_333.4	333.4	2.7	600	0.19	2200	7000	1.5	600	0.10	2200	7000	
C 41 4_381.8	381.8	2.4	600	0.16	2200	7000	1.3	600	0.09	2200	7000	
C 41 4_418.5	418.5	2.2	600	0.15	2200	7000	1.2	600	0.08	2200	7000	
C 41 4_450.2	450.2	2.0	600	0.14	2200	7000	1.1	600	0.08	2200	7000	
C 41 4_493.5	493.5	1.8	600	0.13	2200	7000	1.0	600	0.07	2200	7000	
C 41 4_543.5	543.5	1.7	600	0.11	2200	7000	0.92	600	0.06	2200	7000	
C 41 4_595.8	595.8	1.5	600	0.10	2200	7000	0.84	600	0.06	2200	7000	
C 41 4_671.3	671.3	1.3	600	0.09	2200	7000	0.74	600	0.05	2200	7000	
C 41 4_735.9	735.9	1.2	600	0.08	2200	7000	0.68	600	0.05	2200	7000	
C 41 4_780.4	780.4	1.2	600	0.08	2200	7000	0.64	600	0.04	2200	7000	
C 41 4_855.5	855.5	1.1	600	0.07	2200	7000	0.58	600	0.04	2200	7000	

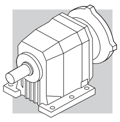

C 51 1000 Nm

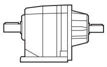	i	$n_1 = 2800$ min^{-1}					$n_1 = 1400$ min^{-1}					
		n_2 min^{-1}	M_{n2} Nm	P_{n1} kW	R_{n1} N	R_{n2} N	n_2 min^{-1}	M_{n2} Nm	P_{n1} kW	R_{n1} N	R_{n2} N	
C 51 2_2.6	2.6	1077	315	37	980	3340	538	400	24	1390	4200	149
C 51 2_3.3	3.3	848	340	32	1070	3610	424	420	19.6	1650	4580	
C 51 2_4.5	4.5	622	370	25	1170	4010	311	435	14.9	2010	5180	
C 51 2_5.6	5.6	500	390	21	1290	4380	250	435	12.0	2400	5760	
C 51 2_7.0	7.0	400	500	22	2270	4760	200	630	13.9	2860	6000	
C 51 2_7.8	7.8	359	510	20	2360	4940	179	640	12.7	2980	6230	
C 51 2_8.8	8.8	318	545	19.1	2300	5120	159	685	12.0	2900	6450	
C 51 2_9.8	9.8	286	545	17.2	2410	5350	143	685	10.8	3030	6750	
C 51 2_11.8	11.8	237	610	16.0	2310	5620	119	770	10.1	2910	7080	
C 51 2_13.1	13.1	214	595	14.0	2440	5930	107	750	8.8	3070	7470	
C 51 2_15.0	15.0	187	660	13.6	2330	6080	93	800	8.2	2980	7770	
C 51 2_16.6	16.6	169	640	11.9	2460	6420	84	795	7.4	3120	8130	
C 51 2_18.9	18.9	148	695	11.3	2330	6630	74	800	6.5	3050	8620	
C 51 2_21.0	21.0	133	675	9.9	2460	7000	67	795	5.8	3180	9020	
C 51 2_23.4	23.4	120	735	9.7	2320	7160	60	800	5.3	3110	9460	
C 51 2_25.9	25.9	108	715	8.5	2460	7550	54	795	4.7	3230	9890	
C 51 2_29.8	29.8	94	795	8.2	2310	7770	47	800	4.1	3180	10000	
C 51 2_33.0	33.0	85	775	7.2	2440	8190	42	795	3.7	3300	10000	
C 51 2_36.4	36.4	77	750	6.4	2390	8660	38	790	3.3	3220	10000	
C 51 2_40.4	40.4	69	795	6.1	2440	8870	35	795	3.0	3320	10000	
C 51 2_43.1	43.1	65	730	5.2	2450	9380	32	770	2.8	3280	10000	
C 51 2_47.8	47.8	59	800	5.2	2460	9530	29.3	800	2.6	3350	10000	
C 51 2_51.4	51.4	54	665	4.0	2550	10000	27.2	700	2.1	3390	10000	
C 51 2_57.0	57.0	49	745	4.0	2540	10000	24.6	785	2.1	3380	10000	
C 51 3_21.8	21.8	128	720	10.4	2870	6940	64	905	6.5	3500	8750	
C 51 3_23.9	23.9	117	730	9.6	2910	7230	59	920	6.1	3500	9110	
C 51 3_27.4	27.4	102	770	8.9	2890	7510	51	970	5.6	3500	9470	
C 51 3_30.1	30.1	93	780	8.2	2930	7830	47	1000	5.2	3500	9810	
C 51 3_37.0	37.0	76	840	7.2	2910	8330	38	1000	4.3	3500	10000	
C 51 3_40.5	40.5	69	855	6.7	2940	8670	35	1000	3.9	3500	10000	
C 51 3_46.7	46.7	60	905	6.1	2920	9020	30	1000	3.4	3500	10000	
C 51 3_51.2	51.2	55	920	5.7	2950	9390	27.3	1000	3.1	3500	10000	
C 51 3_59.0	59.0	47	970	5.2	2910	9780	23.7	1000	2.7	3500	10000	
C 51 3_64.6	64.6	43	1000	4.9	2940	10000	21.7	1000	2.4	3500	10000	
C 51 3_72.9	72.9	38	1000	4.3	2920	10000	19.2	1000	2.2	3500	10000	
C 51 3_79.9	79.9	35	1000	3.9	2960	10000	17.5	1000	2.0	3500	10000	
C 51 3_93.0	93.0	30	1000	3.4	2950	10000	15.1	1000	1.7	3500	10000	
C 51 3_101.8	101.8	27.5	1000	3.1	2990	10000	13.8	1000	1.5	3500	10000	
C 51 3_113.6	113.6	24.6	1000	2.8	2960	10000	12.3	1000	1.4	3500	10000	
C 51 3_124.4	124.4	22.5	1000	2.5	3000	10000	11.3	1000	1.3	3500	10000	
C 51 3_134.6	134.6	20.8	1000	2.3	2970	10000	10.4	1000	1.2	3500	10000	
C 51 3_147.4	147.4	19.0	1000	2.1	3010	10000	9.5	1000	1.1	3500	10000	
C 51 3_160.5	160.5	17.4	1000	2.0	2980	10000	8.7	1000	0.98	3500	10000	
C 51 3_175.8	175.8	15.9	1000	1.8	3020	10000	8.0	1000	0.90	3500	10000	
C 51 3_197.9	197.9	14.1	1000	1.6	2980	10000	7.1	1000	0.80	3500	10000	
C 51 3_216.7	216.7	12.9	1000	1.5	3020	10000	6.5	1000	0.73	3500	10000	
C 51 4_240.9	240.9	11.6	1000	1.3	2100	10000	5.8	1000	0.67	2200	10000	
C 51 4_263.8	263.8	10.6	1000	1.2	2120	10000	5.3	1000	0.61	2200	10000	
C 51 4_297.8	297.8	9.4	1000	1.1	2140	10000	4.7	1000	0.54	2200	10000	
C 51 4_326.1	326.1	8.6	1000	0.99	2160	10000	4.3	1000	0.49	2200	10000	
C 51 4_379.6	379.6	7.4	1000	0.85	2190	10000	3.7	1000	0.42	2200	10000	
C 51 4_415.7	415.7	6.7	1000	0.78	2200	10000	3.4	1000	0.39	2200	10000	
C 51 4_463.9	463.9	6.0	1000	0.69	2200	10000	3.0	1000	0.35	2200	10000	
C 51 4_508.0	508.0	5.5	1000	0.63	2200	10000	2.8	1000	0.32	2200	10000	
C 51 4_549.7	549.7	5.1	1000	0.59	2200	10000	2.5	1000	0.29	2200	10000	
C 51 4_602.0	602.0	4.7	1000	0.54	2200	10000	2.3	1000	0.27	2200	10000	
C 51 4_655.4	655.4	4.3	1000	0.49	2200	10000	2.1	1000	0.25	2200	10000	
C 51 4_717.7	717.7	3.9	1000	0.45	2200	10000	2.0	1000	0.22	2200	10000	
C 51 4_808.0	808.0	3.5	1000	0.40	2200	10000	1.7	1000	0.20	2200	10000	
C 51 4_884.9	884.9	3.2	1000	0.36	2200	10000	1.6	1000	0.18	2200	10000	

C 51 1000 Nm

	i	n_1 = 900 min^{-1}					n_1 = 500 min^{-1}					
		n_2 min^{-1}	M_{n2} Nm	P_{n1} kW	R_{n1} N	R_{n2} N	n_2 min^{-1}	M_{n2} Nm	P_{n1} kW	R_{n1} N	R_{n2} N	
C 51 2_2.6	2.6	346	400	15.3	2560	5130	192	400	8.5	3500	6620	149
C 51 2_3.3	3.3	273	420	12.6	2710	5590	152	420	7.0	3500	7200	
C 51 2_4.5	4.5	200	435	9.6	2900	6300	111	435	5.3	3500	8070	
C 51 2_5.6	5.6	161	435	7.7	3080	6970	89	435	4.3	3500	8880	
C 51 2_7.0	7.0	129	730	10.3	3310	6950	71	800	6.3	3500	8760	
C 51 2_7.8	7.8	115	740	9.4	3460	7220	64	800	5.7	3500	9140	
C 51 2_8.8	8.8	102	795	9.0	3360	7470	57	800	5.0	3500	9680	
C 51 2_9.8	9.8	92	800	8.1	3500	7790	51	800	4.5	3500	10000	
C 51 2_11.8	11.8	76	800	6.7	3500	8530	42	800	3.7	3500	10000	
C 51 2_13.1	13.1	69	800	6.1	3500	8900	38	800	3.4	3500	10000	
C 51 2_15.0	15.0	60	800	5.3	3500	9450	33	800	2.9	3500	10000	
C 51 2_16.6	16.6	54	800	4.8	3500	9850	30	800	2.7	3500	10000	
C 51 2_18.9	18.9	48	800	4.2	3500	10000	26.5	800	2.3	3500	10000	
C 51 2_21.0	21.0	43	800	3.8	3500	10000	23.8	800	2.1	3500	10000	
C 51 2_23.4	23.4	38	800	3.4	3500	10000	21.4	800	1.9	3500	10000	
C 51 2_25.9	25.9	35	800	3.1	3500	10000	19.3	800	1.7	3500	10000	
C 51 2_29.8	29.8	30	800	2.7	3500	10000	16.8	800	1.5	3500	10000	
C 51 2_33.0	33.0	27.3	800	2.4	3500	10000	15.2	800	1.3	3500	10000	
C 51 2_36.4	36.4	24.7	800	2.2	3500	10000	13.7	800	1.2	3500	10000	
C 51 2_40.4	40.4	22.3	800	2.0	3500	10000	12.4	800	1.1	3500	10000	
C 51 2_43.1	43.1	20.9	800	1.8	3500	10000	11.6	800	1.0	3500	10000	
C 51 2_47.8	47.8	18.8	800	1.7	3500	10000	10.5	800	0.92	3500	10000	
C 51 2_51.4	51.4	17.5	725	1.4	3500	10000	9.7	755	0.81	3500	10000	
C 51 2_57.0	57.0	15.8	795	1.4	3500	10000	8.8	795	0.77	3500	10000	
C 51 3_21.8	21.8	41	1000	4.6	3500	10000	22.9	1000	2.6	3500	10000	
C 51 3_23.9	23.9	38	1000	4.2	3500	10000	20.9	1000	2.4	3500	10000	
C 51 3_27.4	27.4	33	1000	3.7	3500	10000	18.2	1000	2.1	3500	10000	
C 51 3_30.1	30.1	29.9	1000	3.4	3500	10000	16.6	1000	1.9	3500	10000	
C 51 3_37.0	37.0	24.3	1000	2.7	3500	10000	13.5	1000	1.5	3500	10000	
C 51 3_40.5	40.5	22.2	1000	2.5	3500	10000	12.3	1000	1.4	3500	10000	
C 51 3_46.7	46.7	19.3	1000	2.2	3500	10000	10.7	1000	1.2	3500	10000	
C 51 3_51.2	51.2	17.6	1000	2.0	3500	10000	9.8	1000	1.1	3500	10000	
C 51 3_59.0	59.0	15.3	1000	1.7	3500	10000	8.5	1000	0.95	3500	10000	
C 51 3_64.6	64.6	13.9	1000	1.6	3500	10000	7.7	1000	0.87	3500	10000	
C 51 3_72.9	72.9	12.3	1000	1.4	3500	10000	6.9	1000	0.77	3500	10000	
C 51 3_79.9	79.9	11.3	1000	1.3	3500	10000	6.3	1000	0.70	3500	10000	
C 51 3_93.0	93.0	9.7	1000	1.1	3500	10000	5.4	1000	0.61	3500	10000	
C 51 3_101.8	101.8	8.8	1000	1.0	3500	10000	4.9	1000	0.55	3500	10000	
C 51 3_113.6	113.6	7.9	1000	0.89	3500	10000	4.4	1000	0.50	3500	10000	
C 51 3_124.4	124.4	7.2	1000	0.81	3500	10000	4.0	1000	0.45	3500	10000	
C 51 3_134.6	134.6	6.7	1000	0.75	3500	10000	3.7	1000	0.42	3500	10000	
C 51 3_147.4	147.4	6.1	1000	0.69	3500	10000	3.4	1000	0.38	3500	10000	
C 51 3_160.5	160.5	5.6	1000	0.63	3500	10000	3.1	1000	0.35	3500	10000	
C 51 3_175.8	175.8	5.1	1000	0.58	3500	10000	2.8	1000	0.32	3500	10000	
C 51 3_197.9	197.9	4.5	1000	0.51	3500	10000	2.5	1000	0.28	3500	10000	
C 51 3_216.7	216.7	4.2	1000	0.47	3500	10000	2.3	1000	0.26	3500	10000	
C 51 4_240.9	240.9	3.7	1000	0.43	2200	10000	2.1	1000	0.24	2200	10000	
C 51 4_263.8	263.8	3.4	1000	0.39	2200	10000	1.9	1000	0.22	2200	10000	
C 51 4_297.8	297.8	3.0	1000	0.35	2200	10000	1.7	1000	0.19	2200	10000	
C 51 4_326.1	326.1	2.8	1000	0.32	2200	10000	1.5	1000	0.18	2200	10000	
C 51 4_379.6	379.6	2.4	1000	0.27	2200	10000	1.3	1000	0.15	2200	10000	
C 51 4_415.7	415.7	2.2	1000	0.25	2200	10000	1.2	1000	0.14	2200	10000	
C 51 4_463.9	463.9	1.9	1000	0.22	2200	10000	1.1	1000	0.12	2200	10000	
C 51 4_508.0	508.0	1.8	1000	0.20	2200	10000	1.0	1000	0.11	2200	10000	
C 51 4_549.7	549.7	1.6	1000	0.19	2200	10000	0.91	1000	0.10	2200	10000	
C 51 4_602.0	602.0	1.5	1000	0.17	2200	10000	0.83	1000	0.10	2200	10000	
C 51 4_655.4	655.4	1.4	1000	0.16	2200	10000	0.76	1000	0.09	2200	10000	
C 51 4_717.7	717.7	1.3	1000	0.14	2200	10000	0.70	1000	0.08	2200	10000	
C 51 4_808.0	808.0	1.1	1000	0.13	2200	10000	0.62	1000	0.07	2200	10000	
C 51 4_884.9	884.9	1.0	1000	0.12	2200	10000	0.57	1000	0.07	2200	10000	

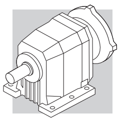

C 61 1600 Nm

	i	n_1 = 2800 min^{-1}					n_1 = 1400 min^{-1}					
		n_2	M_{n2}	P_{n1}	R_{n1}	R_{n2}	n_2	M_{n2}	P_{n1}	R_{n1}	R_{n2}	
		min^{-1}	Nm	kW	N	N	min^{-1}	Nm	kW	N	N	
C 61 2_2.8	2.8	1000	445	49	—	4670	500	550	30	770	5930	153
C 61 2_3.7	3.7	757	530	44	—	4950	378	575	24	1730	6600	
C 61 2_4.6	4.6	609	575	39	—	5280	304	600	20	2150	7130	
C 61 2_6.0	6.0	467	575	30	—	6000	233	625	16.1	2700	7950	
C 61 2_6.7	6.7	418	900	41	2230	5600	209	1130	26	2850	7060	
C 61 2_7.5	7.5	373	1000	41	2220	5620	187	1250	26	2900	7110	
C 61 2_8.8	8.8	318	1000	35	2290	6080	159	1250	22	2980	7690	
C 61 2_9.8	9.8	286	1100	35	2380	6140	143	1350	21	3330	7850	
C 61 2_10.9	10.9	257	1050	30	2530	6590	128	1350	19.1	2940	8210	
C 61 2_12.1	12.1	231	1150	29	2670	6670	116	1350	17.2	3600	8730	
C 61 2_14.3	14.3	196	1150	25	2450	7220	98	1350	14.6	3590	9430	
C 61 2_15.9	15.9	176	1250	24	2660	7350	88	1350	13.1	3780	9990	
C 61 2_17.7	17.7	158	1200	21	2540	7850	79	1350	11.8	3700	10400	
C 61 2_19.6	19.6	143	1300	20	2780	8000	71	1350	10.6	3890	11000	
C 61 2_22.4	22.4	125	1250	17.2	2630	8650	63	1350	9.3	3810	11600	
C 61 2_24.8	24.8	113	1350	16.8	2840	8840	56	1350	8.4	3980	12300	
C 61 2_27.4	27.4	102	1300	14.6	2600	9390	51	1350	7.6	3880	12800	
C 61 2_30.4	30.4	92	1350	13.7	2900	9770	46	1350	6.9	4050	13500	
C 61 2_34.2	34.2	82	1165	10.5	3020	10900	41	1225	5.5	4090	14500	
C 61 2_38.0	38.0	74	1280	10.4	3030	11100	37	1350	5.5	4100	14800	
C 61 3_26.8	26.8	104	1140	13.4	3740	9810	52	1435	8.4	4700	12400	
C 61 3_29.4	29.4	95	1160	12.4	3780	10200	48	1465	7.9	4700	12900	
C 61 3_33.0	33.0	85	1210	11.6	3750	10600	42	1525	7.3	4700	13300	
C 61 3_36.1	36.1	78	1235	10.8	3800	11000	39	1555	6.8	4700	13800	
C 61 3_43.4	43.4	65	1315	9.6	3760	11600	32	1600	5.8	4700	14800	
C 61 3_47.6	47.6	59	1340	8.9	3810	12100	29.4	1600	5.3	4700	15500	
C 61 3_53.5	53.5	52	1400	8.2	3760	12500	26.2	1600	4.7	4700	16000	
C 61 3_58.6	58.6	48	1430	7.7	3810	13000	23.9	1600	4.3	4700	16000	
C 61 3_67.7	67.7	41	1505	7.0	3750	13500	20.7	1600	3.7	4700	16000	
C 61 3_74.2	74.2	38	1535	6.5	3800	14100	18.9	1600	3.4	4700	16000	
C 61 3_83.0	83.0	34	1600	6.1	3740	14500	16.9	1600	3.0	4700	16000	
C 61 3_91.0	91.0	31	1600	5.5	3800	15200	15.4	1600	2.8	4700	16000	
C 61 3_103.6	103.6	27.0	1600	4.9	3760	16000	13.5	1600	2.4	4700	16000	
C 61 3_113.6	113.6	24.6	1600	4.4	3820	16000	12.3	1600	2.2	4700	16000	
C 61 3_128.1	128.1	21.9	1600	3.9	3790	16000	10.9	1600	2.0	4700	16000	
C 61 3_140.5	140.5	19.9	1600	3.6	3840	16000	10.0	1600	1.8	4700	16000	
C 61 3_150.0	150.0	18.7	1600	3.4	3800	16000	9.3	1600	1.7	4700	16000	
C 61 3_164.5	164.5	17.0	1600	3.1	3850	16000	8.5	1600	1.5	4700	16000	
C 61 3_178.6	178.6	15.7	1600	2.8	3800	16000	7.8	1600	1.4	4700	16000	
C 61 3_195.8	195.8	14.3	1600	2.6	3860	16000	7.2	1600	1.3	4700	16000	
C 61 4_217.4	217.4	12.9	1600	2.4	3020	16000	6.4	1600	1.2	3500	16000	
C 61 4_238.3	238.3	11.7	1600	2.2	3060	16000	5.9	1600	1.1	3500	16000	
C 61 4_275.3	275.3	10.2	1600	1.9	3100	16000	5.1	1600	0.94	3500	16000	
C 61 4_301.7	301.7	9.3	1600	1.7	3130	16000	4.6	1600	0.85	3500	16000	
C 61 4_337.7	337.7	8.3	1600	1.5	3160	16000	4.1	1600	0.76	3500	16000	
C 61 4_370.1	370.1	7.6	1600	1.4	3180	16000	3.8	1600	0.70	3500	16000	
C 61 4_421.5	421.5	6.6	1600	1.2	3200	16000	3.3	1600	0.61	3500	16000	
C 61 4_462.0	462.0	6.1	1600	1.1	3220	16000	3.0	1600	0.56	3500	16000	
C 61 4_521.1	521.1	5.4	1600	0.99	3240	16000	2.7	1600	0.49	3500	16000	
C 61 4_571.2	571.2	4.9	1600	0.90	3250	16000	2.5	1600	0.45	3500	16000	
C 61 4_610.1	610.1	4.6	1600	0.84	3260	16000	2.3	1600	0.42	3500	16000	
C 61 4_668.8	668.8	4.2	1600	0.77	3280	16000	2.1	1600	0.39	3500	16000	
C 61 4_726.3	726.3	3.9	1600	0.71	3290	16000	1.9	1600	0.35	3500	16000	
C 61 4_796.1	796.1	3.5	1600	0.65	3300	16000	1.8	1600	0.32	3500	16000	

(—) Nehmen Sie bitte Kontakt mit unserem Applikationsdienst auf und geben die Querkraftsdaten an (Drehrichtung, Orientierung, Anordnung)

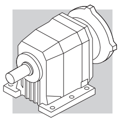

C 61 1600 Nm

	i	n_1 = 900 min^{-1}					n_1 = 500 min^{-1}					
		n_2 min^{-1}	M_{n2} Nm	P_{n1} kW	R_{n1} N	R_{n2} N	n_2 min^{-1}	M_{n2} Nm	P_{n1} kW	R_{n1} N	R_{n2} N	
C 61 2_2.8	2.8	321	565	20	2840	7150	179	665	13.1	4050	8790	153
C 61 2_3.7	3.7	243	625	16.8	3000	7800	135	665	9.9	4700	9860	
C 61 2_4.6	4.6	196	665	14.3	3170	8380	109	665	8.0	4700	10760	
C 61 2_6.0	6.0	150	665	11.0	4120	9440	83	665	6.1	4700	12000	
C 61 2_6.7	6.7	134	1350	20	2850	8050	75	1350	11.1	4700	10800	
C 61 2_7.5	7.5	120	1350	17.9	4010	8560	67	1350	9.9	4700	11400	
C 61 2_8.8	8.8	102	1350	15.2	4070	9240	57	1350	8.5	4700	12200	
C 61 2_9.8	9.8	92	1350	13.7	4310	9790	51	1350	7.6	4700	12900	
C 61 2_10.9	10.9	83	1350	12.3	4270	10200	46	1350	6.8	4700	13400	
C 61 2_12.1	12.1	74	1350	11.1	4480	10800	41	1350	6.1	4700	14100	
C 61 2_14.3	14.3	63	1350	9.4	4470	11600	35	1350	5.2	4700	15100	
C 61 2_15.9	15.9	57	1350	8.4	4660	12300	31	1350	4.7	4700	15900	
C 61 2_17.7	17.7	51	1350	7.6	4580	12800	28.2	1350	4.2	4700	16000	
C 61 2_19.6	19.6	46	1350	6.8	4700	13500	25.5	1350	3.8	4700	16000	
C 61 2_22.4	22.4	40	1350	6.0	4690	14200	22.3	1350	3.3	4700	16000	
C 61 2_24.8	24.8	36	1350	5.4	4700	14900	20.2	1350	3.0	4700	16000	
C 61 2_27.4	27.4	33	1350	4.9	4700	15500	18.2	1350	2.7	4700	16000	
C 61 2_30.4	30.4	29.6	1350	4.4	4700	16000	16.4	1350	2.4	4700	16000	
C 61 2_34.2	34.2	26.3	1265	3.7	4700	16000	14.6	1325	2.1	4700	16000	
C 61 2_38.0	38.0	23.7	1350	3.5	4700	16000	13.2	1350	2.0	4700	16000	
C 61 3_26.8	26.8	34	1600	6.0	4700	14500	18.7	1600	3.4	4700	16000	
C 61 3_29.4	29.4	31	1600	5.5	4700	15200	17.0	1600	3.1	4700	16000	
C 61 3_33.0	33.0	27.3	1600	4.9	4700	15900	15.2	1600	2.7	4700	16000	
C 61 3_36.1	36.1	24.9	1600	4.5	4700	16000	13.9	1600	2.5	4700	16000	
C 61 3_43.4	43.4	20.7	1600	3.7	4700	16000	11.5	1600	2.1	4700	16000	
C 61 3_47.6	47.6	18.9	1600	3.4	4700	16000	10.5	1600	1.9	4700	16000	
C 61 3_53.5	53.5	16.8	1600	3.0	4700	16000	9.3	1600	1.7	4700	16000	
C 61 3_58.6	58.6	15.4	1600	2.8	4700	16000	8.5	1600	1.5	4700	16000	
C 61 3_67.7	67.7	13.3	1600	2.4	4700	16000	7.4	1600	1.3	4700	16000	
C 61 3_74.2	74.2	12.1	1600	2.2	4700	16000	6.7	1600	1.2	4700	16000	
C 61 3_83.0	83.0	10.8	1600	2.0	4700	16000	6.0	1600	1.1	4700	16000	
C 61 3_91.0	91.0	9.9	1600	1.8	4700	16000	5.5	1600	0.99	4700	16000	
C 61 3_103.6	103.6	8.7	1600	1.6	4700	16000	4.8	1600	0.87	4700	16000	
C 61 3_113.6	113.6	7.9	1600	1.4	4700	16000	4.4	1600	0.79	4700	16000	
C 61 3_128.1	128.1	7.0	1600	1.3	4700	16000	3.9	1600	0.70	4700	16000	
C 61 3_140.5	140.5	6.4	1600	1.2	4700	16000	3.6	1600	0.64	4700	16000	
C 61 3_150.0	150.0	6.0	1600	1.1	4700	16000	3.3	1600	0.60	4700	16000	
C 61 3_164.5	164.5	5.5	1600	0.99	4700	16000	3.0	1600	0.55	4700	16000	
C 61 3_178.6	178.6	5.0	1600	0.91	4700	16000	2.8	1600	0.50	4700	16000	
C 61 3_195.8	195.8	4.6	1600	0.83	4700	16000	2.6	1600	0.46	4700	16000	
C 61 4_217.4	217.4	4.1	1600	0.76	3500	16000	2.3	1600	0.42	3500	16000	
C 61 4_238.3	238.3	3.8	1600	0.70	3500	16000	2.1	1600	0.39	3500	16000	
C 61 4_275.3	275.3	3.3	1600	0.60	3500	16000	1.8	1600	0.33	3500	16000	
C 61 4_301.7	301.7	3.0	1600	0.55	3500	16000	1.7	1600	0.31	3500	16000	
C 61 4_337.7	337.7	2.7	1600	0.49	3500	16000	1.5	1600	0.27	3500	16000	
C 61 4_370.1	370.1	2.4	1600	0.45	3500	16000	1.4	1600	0.25	3500	16000	
C 61 4_421.5	421.5	2.1	1600	0.39	3500	16000	1.2	1600	0.22	3500	16000	
C 61 4_462.0	462.0	1.9	1600	0.36	3500	16000	1.1	1600	0.20	3500	16000	
C 61 4_521.1	521.1	1.7	1600	0.32	3500	16000	1.0	1600	0.18	3500	16000	
C 61 4_571.2	571.2	1.6	1600	0.29	3500	16000	0.88	1600	0.16	3500	16000	
C 61 4_610.1	610.1	1.5	1600	0.27	3500	16000	0.82	1600	0.15	3500	16000	
C 61 4_668.8	668.8	1.3	1600	0.25	3500	16000	0.75	1600	0.14	3500	16000	
C 61 4_726.3	726.3	1.2	1600	0.23	3500	16000	0.69	1600	0.13	3500	16000	
C 61 4_796.1	796.1	1.1	1600	0.21	3500	16000	0.63	1600	0.12	3500	16000	

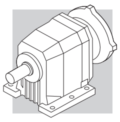

C 70 2300 Nm

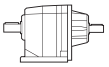	i	n_1 = 2800 min^{-1}					n_1 = 1400 min^{-1}					
		n_2	M_{n2}	P_{n1}	R_{n1}	R_{n2}	n_2	M_{n2}	P_{n1}	R_{n1}	R_{n2}	
		min^{-1}	Nm	kW	N	N	min^{-1}	Nm	kW	N	N	
C 70 2_4.6	4.6	613	1400	95	—	5590	306	1700	57	—	7100	156
C 70 2_5.9	5.9	479	1550	82	—	5610	239	1900	50	—	6990	
C 70 2_6.3	6.3	448	1600	79	1980	6570	224	1950	48	2630	8250	
C 70 2_7.5	7.5	375	1550	64	—	7130	188	1950	40	—	8400	
C 70 2_8.0	8.0	350	1750	68	1760	6840	175	2100	41	2670	8880	
C 70 2_9.5	9.5	294	1600	52	770	8260	147	2000	32	620	9910	
C 70 2_10.2	10.2	274	1900	57	2000	7200	137	2100	32	4470	10800	
C 70 2_11.2	11.2	250	1600	44	1130	9350	125	2000	28	1070	11300	
C 70 2_13.0	13.0	215	2050	49	1860	7700	107	2100	25	5600	12900	
C 70 2_14.1	14.1	199	1700	37	1100	10100	99	2100	23	1280	12400	
C 70 2_15.3	15.3	183	2100	42	1810	8540	91	2100	21	5860	14300	
C 70 2_16.7	16.7	168	1700	31	1570	11400	84	2050	18.9	2350	14300	
C 70 2_19.3	19.3	145	2100	34	2730	10400	73	2100	16.8	6000	16300	
C 70 2_22.9	22.9	123	2100	28	3160	11800	61	2100	14.2	6060	18000	
C 70 2_27.7	27.7	101	2100	23	3570	13400	51	2100	11.7	6120	19900	
C 70 2_34.7	34.7	81	2100	18.7	3960	15400	40	2100	9.3	6180	22200	
C 70 3_41.3	41.3	68	1900	14.5	5670	18400	34	2300	8.8	7000	22800	
C 70 3_44.7	44.7	63	1900	13.4	5700	19100	31	2300	8.1	7000	23800	
C 70 3_52.2	52.2	54	2050	12.4	5680	19600	26.8	2300	7.0	7000	25000	
C 70 3_56.5	56.5	50	2050	11.4	5710	20400	24.8	2300	6.4	7000	25000	
C 70 3_65.9	65.9	43	2200	10.5	5670	21000	21.3	2300	5.5	7000	25000	
C 70 3_71.3	71.3	39	2200	9.7	5710	21900	19.6	2300	5.1	7000	25000	
C 70 3_81.4	81.4	34	2300	8.9	5680	22700	17.2	2300	4.5	7000	25000	
C 70 3_88.2	88.2	32	2300	8.2	5710	23600	15.9	2300	4.1	7000	25000	
C 70 3_103.8	103.8	27.0	2300	7.0	5700	25000	13.5	2300	3.5	7000	25000	
C 70 3_112.4	112.4	24.9	2300	6.4	5740	25000	12.5	2300	3.2	7000	25000	
C 70 3_126.8	126.8	22.1	2300	5.7	5720	25000	11.0	2300	2.9	7000	25000	
C 70 3_137.4	137.4	20.4	2300	5.3	5750	25000	10.2	2300	2.6	7000	25000	
C 70 3_150.3	150.3	18.6	2300	4.8	5730	25000	9.3	2300	2.4	7000	25000	
C 70 3_162.8	162.8	17.2	2300	4.5	5760	25000	8.6	2300	2.2	7000	25000	
C 70 3_179.2	179.2	15.6	2300	4.0	5740	25000	7.8	2300	2.0	7000	25000	
C 70 3_194.1	194.1	14.4	2300	3.7	5770	25000	7.2	2300	1.9	7000	25000	
C 70 3_220.9	220.9	12.7	2250	3.2	5750	25000	6.3	2250	1.6	7000	25000	
C 70 3_239.3	239.3	11.7	2300	3.0	5770	25000	5.8	2300	1.5	7000	25000	
C 70 4_251.3	251.3	11.1	2300	2.9	2000	25000	5.6	2300	1.5	2620	25000	
C 70 4_272.2	272.2	10.3	2300	2.7	2030	25000	5.1	2300	1.4	2650	25000	
C 70 4_317.9	317.9	8.8	2300	2.3	2030	25000	4.4	2300	1.2	2650	25000	
C 70 4_344.3	344.3	8.1	2300	2.2	2050	25000	4.1	2300	1.1	2670	25000	
C 70 4_409.4	409.4	6.8	2300	1.8	2050	25000	3.4	2300	0.90	2670	25000	
C 70 4_443.5	443.5	6.3	2300	1.7	2070	25000	3.2	2300	0.80	2700	25000	
C 70 4_512.0	512.0	5.5	2300	1.4	2070	25000	2.7	2300	0.70	2680	25000	
C 70 4_554.7	554.7	5.0	2300	1.3	2090	25000	2.5	2300	0.70	2710	25000	
C 70 4_606.8	606.8	4.6	2300	1.2	2080	25000	2.3	2300	0.60	2700	25000	
C 70 4_657.3	657.3	4.3	2300	1.1	2100	25000	2.1	2300	0.60	2720	25000	
C 70 4_736.0	736.0	3.8	2300	1.0	2090	25000	1.9	2300	0.50	2700	25000	
C 70 4_797.3	797.3	3.5	2300	0.90	2110	25000	1.8	2300	0.50	2720	25000	
C 70 4_922.6	922.6	3.0	2300	0.80	2100	25000	1.5	2300	0.40	2710	25000	
C 70 4_999.5	999.5	2.8	2300	0.70	2110	25000	1.4	2300	0.40	2730	25000	
C 70 4_1069	1069	2.6	2300	0.70	2100	25000	1.3	2300	0.30	2720	25000	
C 70 4_1158	1158	2.4	2300	0.60	2100	25000	1.2	2300	0.30	2800	25000	
C 70 4_1362	1362	2.1	2300	0.50	2100	25000	1.0	2300	0.30	2800	25000	
C 70 4_1476	1476	1.9	2300	0.50	2100	25000	0.90	2300	0.30	2800	25000	

(—) Nehmen Sie bitte Kontakt mit unserem Applikationsdienst auf und geben die Querkraftsdaten an (Drehrichtung, Orientierung, Anordnung)

C 70 2300 Nm

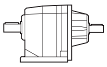	i	$n_1 = 900\ \text{min}^{-1}$					$n_1 = 500\ \text{min}^{-1}$					
		n_2 min^{-1}	M_{n2} Nm	P_{n1} kW	R_{n1} N	R_{n2} N	n_2 min^{-1}	M_{n2} Nm	P_{n1} kW	R_{n1} N	R_{n2} N	
C 70 2_4.6	4.6	197	1800	39	650	9360	109	1800	22	5500	13900	156
C 70 2_5.9	5.9	154	1950	33	560	9980	85	2150	20	2890	13400	
C 70 2_6.3	6.3	144	2100	33	4260	10400	80	2100	18.5	7000	15500	
C 70 2_7.5	7.5	121	2100	28	1120	10800	67	2150	15.9	5400	15600	
C 70 2_8.0	8.0	113	2100	26	5800	12500	63	2100	14.5	7000	17800	
C 70 2_9.5	9.5	95	2150	22	2140	12400	53	2150	12.4	6990	18100	
C 70 2_10.2	10.2	88	2100	20	6870	14600	49	2100	11.3	7000	20200	
C 70 2_11.2	11.2	80	2150	19.0	2620	14000	45	2150	10.6	7000	19800	
C 70 2_13.0	13.0	69	2100	16.0	7000	16900	38	2100	8.9	7000	22800	
C 70 2_14.1	14.1	64	2150	15.1	3900	16000	35	2150	8.4	7000	22300	
C 70 2_15.3	15.3	59	2100	13.6	7000	18400	33	2100	7.5	7000	24600	
C 70 2_16.7	16.7	54	2050	12.2	5470	18500	29.9	2050	6.8	7000	25000	
C 70 2_19.3	19.3	47	2100	10.8	7000	20700	25.9	2100	6.0	7000	25000	
C 70 2_22.9	22.9	39	2100	9.1	7000	22500	21.9	2100	5.1	7000	25000	
C 70 2_27.7	27.7	32	2100	7.5	7000	24600	18.0	2100	4.2	7000	25000	
C 70 2_34.7	34.7	25.9	2100	6.0	7000	25000	14.4	2100	3.3	7000	25000	
C 70 3_41.3	41.3	21.8	2300	5.6	7000	25000	12.1	2300	3.1	7000	25000	
C 70 3_44.7	44.7	20.1	2300	5.2	7000	25000	11.2	2300	2.9	7000	25000	
C 70 3_52.2	52.2	17.3	2300	4.5	7000	25000	9.6	2300	2.5	7000	25000	
C 70 3_56.5	56.5	15.9	2300	4.1	7000	25000	8.8	2300	2.3	7000	25000	
C 70 3_65.9	65.9	13.7	2300	3.5	7000	25000	7.6	2300	2.0	7000	25000	
C 70 3_71.3	71.3	12.6	2300	3.3	7000	25000	7.0	2300	1.8	7000	25000	
C 70 3_81.4	81.4	11.1	2300	2.9	7000	25000	6.1	2300	1.6	7000	25000	
C 70 3_88.2	88.2	10.2	2300	2.6	7000	25000	5.7	2300	1.5	7000	25000	
C 70 3_103.8	103.8	8.7	2300	2.2	7000	25000	4.8	2300	1.2	7000	25000	
C 70 3_112.4	112.4	8.0	2300	2.1	7000	25000	4.4	2300	1.2	7000	25000	
C 70 3_126.8	126.8	7.1	2300	1.8	7000	25000	3.9	2300	1.0	7000	25000	
C 70 3_137.4	137.4	6.6	2300	1.7	7000	25000	3.6	2300	0.90	7000	25000	
C 70 3_150.3	150.3	6.0	2300	1.6	7000	25000	3.3	2300	0.90	7000	25000	
C 70 3_162.8	162.8	5.5	2300	1.4	7000	25000	3.1	2300	0.80	7000	25000	
C 70 3_179.2	179.2	5.0	2300	1.3	7000	25000	2.8	2300	0.70	7000	25000	
C 70 3_194.1	194.1	4.6	2300	1.2	7000	25000	2.6	2300	0.70	7000	25000	
C 70 3_220.9	220.9	4.1	2250	1.0	7000	25000	2.3	2250	0.60	7000	25000	
C 70 3_239.3	239.3	3.8	2300	1.0	7000	25000	2.1	2300	0.50	7000	25000	
C 70 4_251.3	251.3	3.6	2300	0.90	2000	25000	2.0	2300	0.50	2620	25000	
C 70 4_272.2	272.2	3.3	2300	0.90	2030	25000	1.8	2300	0.50	2650	25000	
C 70 4_317.9	317.9	2.8	2300	0.70	2030	25000	1.6	2300	0.40	2650	25000	
C 70 4_344.3	344.3	2.6	2300	0.70	2050	25000	1.5	2300	0.40	2670	25000	
C 70 4_409.4	409.4	2.2	2300	0.60	2050	25000	1.2	2300	0.30	2670	25000	
C 70 4_443.5	443.5	2.0	2300	0.50	2070	25000	1.1	2300	0.30	2700	25000	
C 70 4_512.0	512.0	1.8	2300	0.50	2070	25000	1.0	2300	0.30	2680	25000	
C 70 4_554.7	554.7	1.6	2300	0.40	2090	25000	0.90	2300	0.20	2710	25000	
C 70 4_606.8	606.8	1.5	2300	0.40	2080	25000	0.80	2300	0.20	2700	25000	
C 70 4_657.3	657.3	1.4	2300	0.40	2100	25000	0.80	2300	0.20	2720	25000	
C 70 4_736.0	736.0	1.2	2300	0.30	2090	25000	0.70	2300	0.20	2700	25000	
C 70 4_797.3	797.3	1.1	2300	0.30	2110	25000	0.60	2300	0.20	2720	25000	
C 70 4_922.6	922.6	1.0	2300	0.30	2100	25000	0.50	2300	0.10	2710	25000	
C 70 4_999.5	999.5	0.90	2300	0.20	2110	25000	0.50	2300	0.10	2730	25000	
C 70 4_1069	1069	0.80	2300	0.20	2100	25000	0.50	2300	0.10	2720	25000	
C 70 4_1158	1158	0.80	2300	0.20	2100	25000	0.40	2300	0.10	2800	25000	
C 70 4_1362	1362	0.70	2300	0.20	2100	25000	0.40	2300	0.10	2800	25000	
C 70 4_1476	1476	0.60	2300	0.20	2100	25000	0.30	2300	0.10	2800	25000	

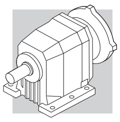

C 80 4000 Nm

	i	n_1 = 2800 min^{-1}					n_1 = 1400 min^{-1}					
		n_2	M_{n2}	P_{n1}	R_{n1}	R_{n2}	n_2	M_{n2}	P_{n1}	R_{n1}	R_{n2}	
		min^{-1}	Nm	kW	N	N	min^{-1}	Nm	kW	N	N	
C 80 2_5.6	5.6	496	2400	131	370	10900	248	3100	85	690	12300	159
C 80 2_6.1	6.1	458	2450	124	890	11000	229	3150	80	1380	12700	
C 80 2_7.0	7.0	398	2650	116	350	11000	199	3350	73	910	12900	
C 80 2_7.6	7.6	367	2700	109	890	11300	183	3400	69	1600	13300	
C 80 2_8.9	8.9	316	2800	98	420	12100	158	3500	61	1120	14500	
C 80 2_9.6	9.6	292	3000	96	520	11300	146	3700	59	1380	13900	
C 80 2_11.1	11.1	252	2800	78	1110	14200	126	3500	49	1950	17100	
C 80 2_12.0	12.0	233	3000	77	1200	13500	116	3700	48	2190	16600	
C 80 2_13.8	13.8	203	2800	63	1420	16400	102	3500	39	2330	19800	
C 80 2_14.9	14.9	188	3000	62	1510	15800	94	3700	38	2560	19300	
C 80 2_16.7	16.7	168	2800	52	1840	18500	84	3500	32	2840	22300	
C 80 2_18.1	18.1	155	3000	50	1930	17900	78	3700	32	3060	22000	
C 80 2_20.5	20.5	136	2850	43	2000	20500	68	3550	27	3060	24800	
C 80 2_22.2	22.2	126	3000	42	2210	20300	63	3700	26	3400	24900	
C 80 2_24.0	24.0	117	2850	37	2090	22400	58	3550	23	3180	27000	
C 80 2_25.9	25.9	108	3000	36	2300	22300	54	3700	22	3510	27200	
C 80 2_31.3	31.3	89	3000	30	2480	24700	45	3700	18.2	3730	30000	
C 80 2_39.1	39.1	72	2500	19.7	3820	31000	36	3200	12.6	5060	35000	
C 80 3_43.5	43.5	64	3100	23	5610	28700	32	3800	13.8	7000	34800	
C 80 3_47.4	47.4	59	3100	21	5660	30000	29.5	3800	12.6	7000	35000	
C 80 3_57.3	57.3	49	3400	18.7	5620	30500	24.4	4000	11.0	7000	35000	
C 80 3_62.5	62.5	45	3400	17.1	5670	31800	22.4	4000	10.1	7000	35000	
C 80 3_70.5	70.5	40	3650	16.3	5620	32200	19.9	4000	8.9	7000	35000	
C 80 3_76.9	76.9	36	3600	14.8	5670	33900	18.2	4000	8.2	7000	35000	
C 80 3_89.3	89.3	31	3900	13.8	5620	34700	15.7	4000	7.1	7000	35000	
C 80 3_97.4	97.4	28.7	3900	12.6	5670	35000	14.4	4000	6.5	7000	35000	
C 80 3_109.5	109.5	25.5	4000	11.5	5630	35000	12.8	4000	5.8	7000	35000	
C 80 3_119.5	119.5	23.4	4000	10.6	5680	35000	11.7	4000	5.3	7000	35000	
C 80 3_136.7	136.7	20.5	4000	9.2	5660	35000	10.2	4000	4.6	7000	35000	
C 80 3_149.1	149.1	18.8	4000	8.5	5700	35000	9.4	4000	4.2	7000	35000	
C 80 3_169.0	169.0	16.6	4000	7.5	5680	35000	8.3	4000	3.7	7000	35000	
C 80 3_184.4	184.4	15.2	4000	6.8	5720	35000	7.6	4000	3.4	7000	35000	
C 80 3_197.9	197.9	14.2	3800	6.1	5710	35000	7.1	3800	3.0	7000	35000	
C 80 3_215.8	215.8	13.0	4000	5.8	5730	35000	6.5	4000	2.9	7000	35000	
C 80 4_261.9	261.9	10.7	4000	4.9	1850	35000	5.3	4000	2.5	2470	35000	
C 80 4_285.7	285.7	9.8	4000	4.5	1890	35000	4.9	4000	2.3	2510	35000	
C 80 4_334.3	334.3	8.4	4000	3.9	1880	35000	4.2	4000	1.9	2500	35000	
C 80 4_364.7	364.7	7.7	4000	3.5	1920	35000	3.8	4000	1.8	2540	35000	
C 80 4_417.5	417.5	6.7	4000	3.1	1910	35000	3.4	4000	1.5	2530	35000	
C 80 4_455.4	455.4	6.1	4000	2.8	1950	35000	3.1	4000	1.4	2570	35000	
C 80 4_529.3	529.3	5.3	4000	2.4	1940	35000	2.6	4000	1.2	2550	35000	
C 80 4_577.4	577.4	4.8	4000	2.2	1970	35000	2.4	4000	1.1	2590	35000	
C 80 4_664.3	664.3	4.2	4000	1.9	1960	35000	2.1	4000	1.0	2570	35000	
C 80 4_724.7	724.7	3.9	4000	1.8	1990	35000	1.9	4000	0.90	2610	35000	
C 80 4_783.4	783.4	3.6	4000	1.6	1970	35000	1.8	4000	0.80	2590	35000	
C 80 4_854.6	854.6	3.3	4000	1.5	2000	35000	1.6	4000	0.80	2620	35000	
C 80 4_945.7	945.7	3.0	4000	1.4	1980	35000	1.5	4000	0.70	2600	35000	
C 80 4_1032	1032	2.7	4000	1.2	2010	35000	1.4	4000	0.60	2630	35000	
C 80 4_1168	1168	2.4	4000	1.1	1980	35000	1.2	4000	0.60	2600	35000	
C 80 4_1274	1274	2.2	4000	1.0	2020	35000	1.1	4000	0.50	2640	35000	
C 80 4_1358	1358	2.1	4000	0.90	1990	35000	1.0	4000	0.50	2610	35000	
C 80 4_1481	1481	1.9	4000	0.90	2030	35000	0.90	4000	0.40	2640	35000	

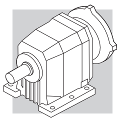

C 80 4000 Nm

	i	n_1 = 900 min^{-1}					n_1 = 500 min^{-1}					
		n_2	M_{n2}	P_{n1}	R_{n1}	R_{n2}	n_2	M_{n2}	P_{n1}	R_{n1}	R_{n2}	
		min^{-1}	Nm	kW	N	N	min^{-1}	Nm	kW	N	N	
C 80 2_5.6	5.6	160	3500	62	1480	14400	89	3500	34	4970	21600	159
C 80 2_6.1	6.1	147	3600	58	2100	14400	82	3700	33	5270	21200	
C 80 2_7.0	7.0	128	3500	49	2630	17000	71	3500	27	6130	24600	
C 80 2_7.6	7.6	118	3650	47	3060	16800	66	3650	26	6550	24600	
C 80 2_8.9	8.9	102	3500	39	3330	19900	56	3500	22	6800	27800	
C 80 2_9.6	9.6	94	3700	38	3590	19400	52	3700	21	7000	27700	
C 80 2_11.1	11.1	81	3500	31	4160	22800	45	3500	17.4	7000	31200	
C 80 2_12.0	12.0	75	3700	31	4400	22500	42	3700	17.0	7000	31200	
C 80 2_13.8	13.8	65	3500	25	4540	25700	36	3500	14.0	7000	34700	
C 80 2_14.9	14.9	60	3700	25	4770	25500	34	3700	13.7	7000	34700	
C 80 2_16.7	16.7	54	3500	21	5050	28500	30	3500	11.6	7000	35000	
C 80 2_18.1	18.1	50	3700	20	5280	28400	27.7	3700	11.3	7000	35000	
C 80 2_20.5	20.5	44	3550	17.2	5270	31400	24.4	3550	9.5	7000	35000	
C 80 2_22.2	22.2	40	3700	16.5	5610	31600	22.5	3700	9.2	7000	35000	
C 80 2_24.0	24.0	38	3550	14.7	5390	33800	20.9	3550	8.2	7000	35000	
C 80 2_25.9	25.9	35	3700	14.1	5730	34200	19.3	3700	7.9	7000	35000	
C 80 2_31.3	31.3	28.7	3700	11.7	5940	35000	16.0	3700	6.5	7000	35000	
C 80 2_39.1	39.1	23.0	3200	8.1	7000	35000	12.8	3200	4.5	7000	35000	
C 80 3_43.5	43.5	20.7	4000	9.3	7000	35000	11.5	4000	5.2	7000	35000	
C 80 3_47.4	47.4	19.0	4000	8.5	7000	35000	10.5	4000	4.7	7000	35000	
C 80 3_57.3	57.3	15.7	4000	7.1	7000	35000	8.7	4000	3.9	7000	35000	
C 80 3_62.5	62.5	14.4	4000	6.5	7000	35000	8.0	4000	3.6	7000	35000	
C 80 3_70.5	70.5	12.8	4000	5.7	7000	35000	7.1	4000	3.2	7000	35000	
C 80 3_76.9	76.9	11.7	4000	5.3	7000	35000	6.5	4000	2.9	7000	35000	
C 80 3_89.3	89.3	10.1	4000	4.5	7000	35000	5.6	4000	2.5	7000	35000	
C 80 3_97.4	97.4	9.2	4000	4.2	7000	35000	5.1	4000	2.3	7000	35000	
C 80 3_109.5	109.5	8.2	4000	3.7	7000	35000	4.6	4000	2.1	7000	35000	
C 80 3_119.5	119.5	7.5	4000	3.4	7000	35000	4.2	4000	1.9	7000	35000	
C 80 3_136.7	136.7	6.6	4000	3.0	7000	35000	3.7	4000	1.6	7000	35000	
C 80 3_149.1	149.1	6.0	4000	2.7	7000	35000	3.4	4000	1.5	7000	35000	
C 80 3_169.0	169.0	5.3	4000	2.4	7000	35000	3.0	4000	1.3	7000	35000	
C 80 3_184.4	184.4	4.9	4000	2.2	7000	35000	2.7	4000	1.2	7000	35000	
C 80 3_197.9	197.9	4.5	3800	1.9	7000	35000	2.5	3800	1.1	7000	35000	
C 80 3_215.8	215.8	4.2	4000	1.9	7000	35000	2.3	4000	1.0	7000	35000	
C 80 4_261.9	261.9	3.4	4000	1.6	2950	35000	1.9	4000	0.90	3500	35000	
C 80 4_285.7	285.7	3.2	4000	1.4	2990	35000	1.8	4000	0.80	3500	35000	
C 80 4_334.3	334.3	2.7	4000	1.2	2980	35000	1.5	4000	0.70	3500	35000	
C 80 4_364.7	364.7	2.5	4000	1.1	3020	35000	1.4	4000	0.60	3500	35000	
C 80 4_417.5	417.5	2.2	4000	1.0	3000	35000	1.2	4000	0.60	3500	35000	
C 80 4_455.4	455.4	2.0	4000	0.90	3050	35000	1.1	4000	0.50	3500	35000	
C 80 4_529.3	529.3	1.7	4000	0.80	3030	35000	0.90	4000	0.40	3500	35000	
C 80 4_577.4	577.4	1.6	4000	0.70	3070	35000	0.90	4000	0.40	3500	35000	
C 80 4_664.3	664.3	1.4	4000	0.60	3050	35000	0.80	4000	0.30	3500	35000	
C 80 4_724.7	724.7	1.2	4000	0.60	3090	35000	0.70	4000	0.30	3500	35000	
C 80 4_783.4	783.4	1.1	4000	0.50	3060	35000	0.60	4000	0.30	3500	35000	
C 80 4_854.6	854.6	1.1	4000	0.50	3100	35000	0.60	4000	0.30	3500	35000	
C 80 4_945.7	945.7	1.0	4000	0.40	3070	35000	0.50	4000	0.20	3500	35000	
C 80 4_1032	1032	0.90	4000	0.40	3110	35000	0.50	4000	0.20	3500	35000	
C 80 4_1168	1168	0.80	4000	0.40	3080	35000	0.40	4000	0.20	3500	35000	
C 80 4_1274	1274	0.70	4000	0.30	3110	35000	0.40	4000	0.20	3500	35000	
C 80 4_1358	1358	0.70	4000	0.30	3090	35000	0.40	4000	0.20	3500	35000	
C 80 4_1481	1481	0.60	4000	0.30	3120	35000	0.30	4000	0.20	3500	35000	

C 90 7200 Nm

	i	$n_1 = 2800\ \text{min}^{-1}$					$n_1 = 1400\ \text{min}^{-1}$					
		n_2 min^{-1}	M_{n2} Nm	P_{n1} kW	R_{n1} N	R_{n2} N	n_2 min^{-1}	M_{n2} Nm	P_{n1} kW	R_{n1} N	R_{n2} N	
C 90 2_5.2	5.2	542	3500	209	1700	12800	271	4300	128	2170	15800	162
C 90 2_5.6	5.6	500	3600	198	3240	12800	250	4400	121	4250	16000	
C 90 2_6.8	6.8	414	3850	176	1860	13400	207	4750	108	2210	16400	
C 90 2_7.3	7.3	383	3950	167	3470	13500	191	4850	102	4360	16700	
C 90 2_8.3	8.3	336	4150	154	2010	13800	168	5100	94	2540	17100	
C 90 2_9.0	9.0	310	4250	145	3660	14000	155	5200	89	4720	17500	
C 90 2_10.4	10.4	270	4500	134	990	14200	135	5550	83	1150	17400	
C 90 2_11.2	11.2	249	4600	126	2750	14400	125	5650	78	3460	17800	
C 90 2_12.8	12.8	219	4850	117	580	14700	109	5950	72	840	18200	
C 90 2_13.9	13.9	202	4900	109	2700	15300	101	6050	67	3220	18700	
C 90 2_16.0	16.0	175	5050	98	690	16800	88	6200	60	950	20800	
C 90 2_17.3	17.3	162	5300	94	1670	15900	81	6500	58	2200	19800	
C 90 2_18.7	18.7	150	5050	83	1140	19600	75	6200	51	1500	24300	
C 90 2_20.2	20.2	138	5400	82	1540	17900	69	6600	50	2160	22500	
C 90 2_22.9	22.9	122	5050	68	2110	22400	61	6200	42	2700	27600	
C 90 2_24.8	24.8	113	5400	67	2500	21900	56	6600	41	3340	27300	
C 90 2_27.2	27.2	103	4500	51	6160	26000	52	5500	31	7820	32200	
C 90 2_29.4	29.4	95	4800	50	6560	26000	48	5900	31	8130	32000	
C 90 2_35.1	35.1	80	4400	39	8090	29400	40	5400	24	11100	36300	
C 90 3_39.4	39.4	71	6350	51	10800	23900	36	7100	28	13700	32900	
C 90 3_43.0	43.0	65	6500	48	10800	24700	33	7200	26	13800	34000	
C 90 3_50.3	50.3	56	6800	43	10800	26000	27.8	7100	22	13800	37000	
C 90 3_54.9	54.9	51	7000	40	10900	26500	25.5	7200	21	13900	38300	
C 90 3_59.2	59.2	47	7100	38	10800	27700	23.6	7100	18.9	13900	40000	
C 90 3_64.6	64.6	43	7200	35	10900	29100	21.7	7200	17.6	14000	41300	
C 90 3_74.4	74.4	38	7100	30	10900	31900	18.8	7100	15.0	14000	44400	
C 90 3_81.2	81.2	34	7200	28	10900	33000	17.2	7200	14.0	14100	45900	
C 90 3_88.2	88.2	32	7100	25	11000	34800	15.9	7100	12.7	14000	47900	
C 90 3_96.2	96.2	29.1	7200	24	11000	35900	14.5	7200	11.8	14100	49400	
C 90 3_107.0	107.0	26.2	7100	21	11000	38100	13.1	7100	10.5	14100	52100	
C 90 3_116.7	116.7	24.0	7200	19.4	11000	39400	12.0	7200	9.7	14100	53700	
C 90 3_134.1	134.1	20.9	7100	16.7	11000	42400	10.4	7100	8.3	14100	57300	
C 90 3_146.3	146.3	19.1	7200	15.5	11000	43800	9.6	7200	7.8	14200	59000	
C 90 3_157.8	157.8	17.7	7100	14.2	11000	45600	8.9	7100	7.1	14100	60000	
C 90 3_172.1	172.1	16.3	7200	13.2	11000	47100	8.1	7200	6.6	14200	60000	
C 90 4_212.4	212.4	13.2	7200	10.9	—	60000	6.6	7200	5.5	1180	60000	
C 90 4_231.7	231.7	12.1	7200	10.0	—	60000	6.0	7200	5.0	1560	60000	
C 90 4_268.5	268.5	10.4	7200	8.6	—	60000	5.2	7200	4.3	1540	60000	
C 90 4_292.9	292.9	9.6	7200	7.9	—	60000	4.8	7200	4.0	1880	60000	
C 90 4_339.0	339.0	8.3	7200	6.8	—	60000	4.1	7200	3.4	1720	60000	
C 90 4_369.8	369.8	7.6	7200	6.3	—	60000	3.8	7200	3.1	2050	60000	
C 90 4_419.0	419.0	6.7	7200	5.5	—	60000	3.3	7200	2.8	1890	60000	
C 90 4_457.1	457.1	6.1	7200	5.1	—	60000	3.1	7200	2.5	2210	60000	
C 90 4_534.2	534.2	5.2	7200	4.3	—	60000	2.6	7200	2.2	2090	60000	
C 90 4_582.8	582.8	4.8	7200	4.0	—	60000	2.4	7200	2.0	2270	60000	
C 90 4_652.8	652.8	4.3	7200	3.6	—	60000	2.1	7200	1.8	2160	60000	
C 90 4_712.2	712.2	3.9	7200	3.3	—	60000	2.0	7200	1.6	2290	60000	
C 90 4_773.6	773.6	3.3	7200	3.0	—	60000	1.8	7200	1.5	2250	60000	
C 90 4_844.0	844.0	3.0	7200	2.7	—	60000	1.7	7200	1.4	2310	60000	
C 90 4_922.3	922.3	2.8	7200	2.5	—	60000	1.5	7200	1.3	2260	60000	
C 90 4_1006	1006	2.5	7200	2.3	—	60000	1.4	7200	1.2	2320	60000	
C 90 4_1137	1137	2.3	7200	2.0	—	60000	1.2	7200	1.0	2270	60000	
C 90 4_1240	1240	2.2	7200	1.9	—	60000	1.1	7200	0.90	2230	60000	

(—) Nehmen Sie bitte Kontakt mit unserem Applikationsdienst auf und geben die Querkraftsdaten an (Drehrichtung, Orientierung, Anordnung)

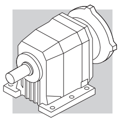

C 90 7200 Nm

	i	n_1 = 900 min^{-1}					n_1 = 500 min^{-1}					
		n_2	M_{n2}	P_{n1}	R_{n1}	R_{n2}	n_2	M_{n2}	P_{n1}	R_{n1}	R_{n2}	
		min^{-1}	Nm	kW	N	N	min^{-1}	Nm	kW	N	N	
C 90 2_5.2	5.2	174	4900	94	2560	18200	97	5850	62	3010	21600	162
C 90 2_5.6	5.6	161	5050	89	4640	18100	89	6000	59	5720	21800	
C 90 2_6.8	6.8	133	5450	80	2310	18500	74	6200	51	5130	24600	
C 90 2_7.3	7.3	123	5550	75	4890	18900	68	6550	49	6340	23200	
C 90 2_8.3	8.3	108	5850	70	2700	19300	60	6200	41	8870	27800	
C 90 2_9.0	9.0	100	5950	65	5300	19800	55	6600	40	9660	27600	
C 90 2_10.4	10.4	87	6200	59	2250	21000	48	6200	33	11000	31000	
C 90 2_11.2	11.2	80	6450	57	3960	20400	45	6600	32	11700	30800	
C 90 2_12.8	12.8	70	6250	48	4500	25300	39	6250	27	13200	34100	
C 90 2_13.9	13.9	65	6550	47	5830	24400	36	6550	26	14600	34300	
C 90 2_16.0	16.0	56	6200	38	6570	28700	31	6200	21	15000	38000	
C 90 2_17.3	17.3	52	6550	38	7530	28600	28.9	6550	21	15000	38100	
C 90 2_18.7	18.7	48	6200	33	7120	31000	26.7	6200	18.3	15000	40700	
C 90 2_20.2	20.2	44	6600	32	7780	30800	24.8	6600	18.0	15000	40700	
C 90 2_22.9	22.9	39	6200	27	8310	34200	21.8	6200	14.9	15000	44500	
C 90 2_24.8	24.8	36	6600	26	8950	34100	20.2	6600	14.6	15000	44600	
C 90 2_27.2	27.2	33	5500	20	13400	39200	18.4	5500	11.2	15000	50000	
C 90 2_29.4	29.4	31	5900	19.9	13700	39100	17.0	5900	11.0	15000	50200	
C 90 2_35.1	35.1	25.6	5400	15.3	14100	43800	14.2	5400	8.5	15000	55500	
C 90 3_39.4	39.4	22.8	7100	18.3	15000	40600	12.7	7100	10.1	15000	40600	
C 90 3_43.0	43.0	20.9	7200	17.0	15000	42000	11.6	7200	9.4	15000	42000	
C 90 3_50.3	50.3	17.9	7100	14.3	15000	45400	9.9	7100	7.9	15000	45400	
C 90 3_54.9	54.9	16.4	7200	13.3	15000	46900	9.1	7200	7.4	15000	46900	
C 90 3_59.2	59.2	15.2	7100	12.2	15000	48800	8.4	7100	6.8	15000	48800	
C 90 3_64.6	64.6	13.9	7200	11.3	15000	50400	7.7	7200	6.3	15000	50400	
C 90 3_74.4	74.4	12.1	7100	9.7	15000	53800	6.7	7100	5.4	15000	53800	
C 90 3_81.2	81.2	11.1	7200	9.0	15000	55500	6.2	7200	5.0	15000	55500	
C 90 3_88.2	88.2	10.2	7100	8.2	15000	57800	5.7	7100	4.5	15000	57800	
C 90 3_96.2	96.2	9.4	7200	7.6	15000	59600	5.2	7200	4.2	15000	59600	
C 90 3_107.0	107.0	8.4	7100	6.7	15000	60000	4.7	7100	3.7	15000	60000	
C 90 3_116.7	116.7	7.7	7200	6.3	15000	60000	4.3	7200	3.5	15000	60000	
C 90 3_134.1	134.1	6.7	7100	5.4	15000	60000	3.7	7100	3.0	15000	60000	
C 90 3_146.3	146.3	6.2	7200	5.0	15000	60000	3.4	7200	2.8	15000	60000	
C 90 3_157.8	157.8	5.7	7100	4.6	15000	60000	3.2	7100	2.5	15000	60000	
C 90 3_172.1	172.1	5.2	7200	4.2	15000	60000	2.9	7200	2.4	15000	60000	
C 90 4_212.4	212.4	4.2	7200	3.5	2090	60000	2.4	7200	2.0	3210	60000	
C 90 4_231.7	231.7	3.9	7200	3.2	2460	60000	2.2	7200	1.8	3290	60000	
C 90 4_268.5	268.5	3.4	7200	2.8	2440	60000	1.9	7200	1.5	3300	60000	
C 90 4_292.9	292.9	3.1	7200	2.5	2620	60000	1.7	7200	1.4	3370	60000	
C 90 4_339.0	339.0	2.7	7200	2.2	2590	60000	1.5	7200	1.2	3340	60000	
C 90 4_369.8	369.8	2.4	7200	2.0	2660	60000	1.4	7200	1.1	3420	60000	
C 90 4_419.0	419.0	2.1	7200	1.8	2630	60000	1.2	7200	1.0	3390	60000	
C 90 4_457.1	457.1	2.0	7200	1.6	2700	60000	1.1	7200	0.90	3460	60000	
C 90 4_534.2	534.2	1.7	7200	1.4	2680	60000	0.90	7200	0.80	3380	60000	
C 90 4_582.8	582.8	1.5	7200	1.3	2750	60000	0.90	7200	0.70	3500	60000	
C 90 4_652.8	652.8	1.4	7200	1.1	2700	60000	0.80	7200	0.60	3450	60000	
C 90 4_712.2	712.2	1.3	7200	1.0	2760	60000	0.70	7200	0.60	3500	60000	
C 90 4_773.6	773.6	1.2	7200	1.0	2720	60000	0.60	7200	0.50	3480	60000	
C 90 4_844.0	844.0	1.1	7200	0.90	2790	60000	0.60	7200	0.50	3500	60000	
C 90 4_922.3	922.3	1.0	7200	0.80	2730	60000	0.50	7200	0.40	3490	60000	
C 90 4_1006	1006	0.90	7200	0.70	2800	60000	0.50	7200	0.40	3500	60000	
C 90 4_1137	1137	0.80	7200	0.70	2740	60000	0.40	7200	0.40	3500	60000	
C 90 4_1240	1240	0.70	7200	0.60	2800	60000	0.40	7200	0.30	3500	60000	

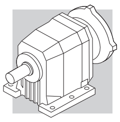

C 100 12000 Nm

	i	n_1 = 2800 min^{-1}					n_1 = 1400 min^{-1}					
		n_2 min^{-1}	M_{n2} Nm	P_{n1} kW	R_{n1} N	R_{n2} N	n_2 min^{-1}	M_{n2} Nm	P_{n1} kW	R_{n1} N	R_{n2} N	
C 100 2_4.9	4.9	569	5500	345	1900	20600	285	6800	213	3790	25300	165
C 100 2_5.3	5.3	525	5650	327	2790	21000	263	6950	201	4940	25800	
C 100 2_6.5	6.5	429	6150	291	1920	21800	215	7550	179	3950	27000	
C 100 2_7.1	7.1	396	6200	271	3100	22700	198	7650	167	5270	27900	
C 100 2_8.4	8.4	335	6700	248	1870	22800	168	8200	152	3970	28500	
C 100 2_9.0	9.0	309	6800	232	2950	23500	155	8350	142	5190	29200	
C 100 2_10.1	10.1	278	7100	217	1930	24100	139	8750	134	3900	29500	
C 100 2_10.9	10.9	256	7100	200	3240	25700	128	8750	124	5460	31600	
C 100 2_12.5	12.5	225	7650	190	1360	24900	112	9400	117	3260	30800	
C 100 2_13.5	13.5	208	7700	176	2600	26300	104	9500	109	4680	32100	
C 100 2_15.2	15.2	184	8100	164	1270	26600	92	10000	101	2680	32500	
C 100 2_16.5	16.5	170	8250	154	2320	27200	85	10150	95	4420	33600	
C 100 2_18.7	18.7	150	8200	136	1500	30800	75	10000	83	3600	38000	
C 100 2_20.2	20.2	138	8100	124	3047	32200	69	10000	76	5210	39600	
C 100 2_22.2	22.2	126	7500	104	3570	35800	63	9200	64	5960	44100	
C 100 2_24.1	24.1	116	8100	104	3620	35200	58	10000	64	5900	43300	
C 100 2_29.6	29.6	95	6900	72	6380	42400	47	8500	44	9220	52200	
C 100 3_34.3	34.3	82	10350	95	9790	33300	41	11700	54	13000	46400	
C 100 3_36.9	36.9	76	10650	91	10200	34500	38	11800	50	13100	48000	
C 100 3_42.9	42.9	65	11350	83	9640	33200	33	12000	44	13100	51200	
C 100 3_46.2	46.2	61	11700	80	10100	33100	30	12000	41	13300	53100	
C 100 3_53.3	53.3	53	12000	71	9450	36400	26.3	12000	36	13200	56900	
C 100 3_57.4	57.4	49	12000	66	10200	39500	24.4	12000	33	13400	59000	
C 100 3_64.5	64.5	43	12000	59	9950	44100	21.7	12000	29	13400	62300	
C 100 3_69.4	69.4	40	12000	54	10400	45900	20.2	12000	27	13500	64500	
C 100 3_79.4	79.4	35	12000	48	10300	49200	17.6	12000	24	13500	68600	
C 100 3_85.6	85.6	33	12000	44	10400	51100	16.4	12000	22	13600	70900	
C 100 3_92.7	92.7	30	12000	41	10400	53200	15.1	12000	20	13500	73500	
C 100 3_99.8	99.8	28.1	12000	38	10500	55200	14.0	12000	19.0	13600	75900	
C 100 3_111.9	111.9	25.0	12000	34	10400	58300	12.5	12000	16.9	13500	79800	
C 100 3_120.5	120.5	23.2	12000	31	10500	60400	11.6	12000	15.7	13700	82400	
C 100 3_139.7	139.7	20.0	11050	25	10600	67400	10.0	11050	12.5	13700	85000	
C 100 3_150.4	150.4	18.6	12000	25	10600	66900	9.3	12000	12.6	13700	85000	
C 100 4_162.1	162.1	17.3	12000	24	—	85000	8.6	12000	11.9	—	85000	
C 100 4_185.4	185.4	15.1	12000	21	—	85000	7.6	12000	10.4	—	85000	
C 100 4_199.6	199.6	14.0	12000	19.4	—	85000	7.0	12000	9.7	—	85000	
C 100 4_244.2	244.2	11.5	12000	15.8	—	85000	5.7	12000	7.9	—	85000	
C 100 4_263.0	263.0	10.6	12000	14.7	—	85000	5.3	12000	7.4	—	85000	
C 100 4_300.5	300.5	9.3	12000	12.9	—	85000	4.7	12000	6.4	—	85000	
C 100 4_323.6	323.6	8.7	12000	11.9	—	85000	4.3	12000	6.0	—	85000	
C 100 4_380.5	380.5	7.4	12000	10.2	—	85000	3.7	12000	5.1	—	85000	
C 100 4_409.8	409.8	6.8	12000	9.4	—	85000	3.4	12000	4.7	—	85000	
C 100 4_466.7	466.7	6.0	12000	8.3	—	85000	3.0	12000	4.1	—	85000	
C 100 4_502.6	502.6	5.6	12000	7.7	—	85000	2.8	12000	3.8	—	85000	
C 100 4_582.6	582.6	4.8	12000	6.6	—	85000	2.4	12000	3.3	—	85000	
C 100 4_627.4	627.4	4.5	12000	6.2	—	85000	2.2	12000	3.1	—	85000	
C 100 4_720.3	720.3	3.9	12000	5.4	—	85000	1.9	12000	2.7	—	85000	
C 100 4_775.7	775.7	3.6	12000	5.0	—	85000	1.8	12000	2.5	—	85000	
C 100 4_843.3	843.3	3.3	12000	4.6	—	85000	1.7	12000	2.3	—	85000	
C 100 4_908.2	908.2	3.1	12000	4.3	—	85000	1.5	12000	2.1	830	85000	
C 100 4_1004	1004	2.8	12000	3.9	—	85000	1.4	12000	1.9	—	85000	
C 100 4_1081	1081	2.6	12000	3.6	—	85000	1.3	12000	1.8	870	85000	

(—) Nehmen Sie bitte Kontakt mit unserem Applikationsdienst auf und geben die Querkraftsdaten an (Drehrichtung, Orientierung, Anordnung)

C 100 12000 Nm

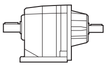	i	$n_1 = 900\ \text{min}^{-1}$					$n_1 = 500\ \text{min}^{-1}$					
		n_2 min⁻¹	M_{n2} Nm	P_{n1} kW	R_{n1} N	R_{n2} N	n_2 min⁻¹	M_{n2} Nm	P_{n1} kW	R_{n1} N	R_{n2} N	
C 100 2_4.9	4.9	183	7800	157	5310	28800	102	9300	104	6720	34400	165
C 100 2_5.3	5.3	169	7950	148	6680	29500	94	9450	98	9740	35200	
C 100 2_6.5	6.5	138	8600	131	5670	31000	77	10250	87	7540	37000	
C 100 2_7.1	7.1	127	8750	123	7050	31800	71	10450	81	10100	37800	
C 100 2_8.4	8.4	108	9350	111	5670	32600	60	10950	72	8530	40100	
C 100 2_9.0	9.0	99	9500	104	7080	33600	55	11350	69	10100	39900	
C 100 2_10.1	10.1	89	10000	98	5540	33600	50	10900	60	10600	44500	
C 100 2_10.9	10.9	82	10150	92	6980	34700	46	11500	58	11300	44300	
C 100 2_12.5	12.5	72	10700	85	3910	35400	40	10850	48	11700	49600	
C 100 2_13.5	13.5	67	10850	80	6440	36700	37	11450	47	12300	49500	
C 100 2_15.2	15.2	59	10800	70	5940	40800	33	10800	39	13000	54700	
C 100 2_16.5	16.5	55	11500	69	6320	39100	30	11500	38	13400	54500	
C 100 2_18.7	18.7	48	10900	58	6310	45100	26.8	10900	32	13400	59800	
C 100 2_20.2	20.2	45	11500	56	6890	45000	24.7	11500	31	14000	60100	
C 100 2_22.2	22.2	40	9850	44	9170	52200	22.5	9850	24	15000	67800	
C 100 2_24.1	24.1	37	10800	44	8930	51200	20.7	10800	25	15000	67200	
C 100 2_29.6	29.6	30	9100	31	12600	61400	16.9	9100	17.0	15000	78300	
C 100 3_34.3	34.3	26.2	11700	35	15000	57800	14.6	11700	19.2	15000	75500	
C 100 3_36.9	36.9	24.4	11800	32	15000	59600	13.5	11800	18.0	15000	77700	
C 100 3_42.9	42.9	21.0	12000	28	15000	63400	11.6	12000	15.7	15000	82300	
C 100 3_46.2	46.2	19.5	12000	26	15000	65600	10.8	12000	14.6	15000	84900	
C 100 3_53.3	53.3	16.9	12000	23	15000	69900	9.4	12000	12.7	15000	85000	
C 100 3_57.4	57.4	15.7	12000	21	15000	72300	8.7	12000	11.8	15000	85000	
C 100 3_64.5	64.5	14.0	12000	18.6	15000	76100	7.8	12000	10.5	15000	85000	
C 100 3_69.4	69.4	13.0	12000	17.5	15000	78600	7.2	12000	9.7	15000	85000	
C 100 3_79.4	79.4	11.3	12000	15.3	15000	83300	6.3	12000	8.5	15000	85000	
C 100 3_85.6	85.6	10.5	12000	14.2	15000	85000	5.8	12000	7.9	15000	85000	
C 100 3_92.7	92.7	9.7	12000	13.1	15000	85000	5.4	12000	7.3	15000	85000	
C 100 3_99.8	99.8	9.0	12000	12.2	15000	85000	5.0	12000	6.8	15000	85000	
C 100 3_111.9	111.9	8.0	12000	10.9	15000	85000	4.5	12000	6.0	15000	85000	
C 100 3_120.5	120.5	7.5	12000	10.1	15000	85000	4.1	12000	5.6	15000	85000	
C 100 3_139.7	139.7	6.4	11500	8.0	15000	85000	3.6	11050	4.5	15000	85000	
C 100 3_150.4	150.4	6.0	12000	8.1	15000	85000	3.3	12000	4.5	15000	85000	
C 100 4_162.1	162.1	5.6	12000	7.7	—	85000	3.1	12000	4.3	—	85000	
C 100 4_185.4	185.4	4.9	12000	6.7	—	85000	2.7	12000	3.7	920	85000	
C 100 4_199.6	199.6	4.5	12000	6.2	—	85000	2.5	12000	3.5	1430	85000	
C 100 4_244.2	244.2	3.7	12000	5.1	—	85000	2.0	12000	2.8	1490	85000	
C 100 4_263.0	263.0	3.4	12000	4.7	—	85000	1.9	12000	2.6	1950	85000	
C 100 4_300.5	300.5	3.0	12000	4.1	—	85000	1.7	12000	2.3	1840	85000	
C 100 4_323.6	323.6	2.8	12000	3.8	850	85000	1.5	12000	2.1	2280	85000	
C 100 4_380.5	380.5	2.4	12000	3.3	700	85000	1.3	12000	1.8	2130	85000	
C 100 4_409.8	409.8	2.2	12000	3.0	1120	85000	1.2	12000	1.7	2550	85000	
C 100 4_466.7	466.7	1.9	12000	2.7	910	85000	1.1	12000	1.5	2340	85000	
C 100 4_502.6	502.6	1.8	12000	2.5	1320	85000	1.0	12000	1.4	2740	85000	
C 100 4_582.6	582.6	1.5	12000	2.1	1100	85000	0.90	12000	1.2	2520	85000	
C 100 4_627.4	627.4	1.4	12000	2.0	1490	85000	0.80	12000	1.1	2910	85000	
C 100 4_720.3	720.3	1.2	12000	1.7	1270	85000	0.70	12000	1.0	2700	85000	
C 100 4_775.7	775.7	1.2	12000	1.6	1650	85000	0.60	12000	0.90	3070	85000	
C 100 4_843.3	843.3	1.1	12000	1.5	1360	85000	0.60	12000	0.80	2790	85000	
C 100 4_908.2	908.2	1.0	12000	1.4	1730	85000	0.60	12000	0.80	3160	85000	
C 100 4_1004	1004	0.90	12000	1.2	1400	85000	0.50	12000	0.70	2830	85000	
C 100 4_1081	1081	0.90	12000	1.1	1770	85000	0.50	12000	0.60	3170	85000	

(—) Nehmen Sie bitte Kontakt mit unserem Applikationsdienst auf und geben die Querkraftsdaten an (Drehrichtung, Orientierung, Anordnung)

27 BAUMÖGLICHKEITEN

In den folgenden Tabellen werden die von den Größen her gesehenen möglichen Passungen angegeben.

Die angemessene Getriebewahl muss unter Befolgung der im Paragraph 12 gegebenen Anleitungen und auf der Grundlage der Auswahltabelle der technischen Daten erfolgen.

(B 22)

		IEC_ BN (IM B5)												
		BN										**IEC**		
P_{n1}(#) [kW]	**2p**	0.37	0.75	1.5	2.2	4	4	9.2	18.5	22	30	45	55	90
	4p	0.25	0.55	1.1	1.85	3	4	9.2	15	22	30	45	55	90
	6p	0.12	0.37	0.75	1.1	1.85	2.2	5.5	11	15	18.5	30	37	55
		P63	**P71**	**P80**	**P90**	**P100**	**P112**	**P132**	**P160**	**P180**	**P200**	**P225**	**P250**	**P280**
C 12 2	i =	2.8_66.2		2.8_47.6		2.8_47.6								
C 22 2		3.7_63.3 ⊖ (7.1_8.7)		2.7_54.7		2.7_54.7								
C 22 3		60.0_261.0		60.0_261.0		60.0_261.0								
C 32 2		5.0_66.8 ⊖ (7.2_11.2)		2.9_66.8		2.9_66.8		2.9_25.1						
C 32 3		74.7_274.7		74.7_274.7		74.7_274.7								
C 36 2		4.6_19.0 ⊖ (6.8_10.6)		2.7_19.0		2.7_19.0		2.7_19.0						
C 36 3		38.1_206.4		22.1_206.4		22.1_206.4		22.1_77.6						
C 36 4		230.9_848.5		230.9_848.5		230.9_848.5								
C 41 2		14.2_44.8		2.7_44.8		2.7_44.8		2.7_31.4						
C 41 3		47.0_209.1		28.5_209.1		28.5_209.1		28.5_102.3						
C 41 4		239.9_855.5		239.9_855.5		239.9_855.5								
C 51 2		18.9_57.0		2.6_57.0		2.6_57.0		2.6_40.4	2.6_40.4	2.6_40.4				
C 51 3		59.0_216.7		21.8_216.7		21.8_216.7		21.8_124.4	21.8_124.4	21.8_124.4				
C 51 4		240.9_884.9		240.9_884.9		240.9_884.9								
C 61 2		22.4_38.0		3.7_38.0 ⊖ (6.7_7.5)		3.7_38.0 ⊖ (6.7_7.5)		2.8_38.0	2.8_38.0	2.8_38.0				
C 61 3		67.7_195.8		26.8_195.8		26.8_195.8		26.8_140.5	26.8_140.5	26.8_140.5				
C 61 4		217.4_796.1		217.4_796.1		217.4_796.1								
C 70 2				14.1_34.7 ⊖ (15.3)		14.1_34.7 ⊖ (15.3)		7.5_34.7 ⊖ (8.0)	4.6_34.7	4.6_34.7	4.6_10.2 ⊖ (9.5)			
C 70 3				41.3_239.3		41.3_239.3		41.3_137.4	41.3_137.4	41.3_137.4				
C 70 4		251.3_1476		251.3_1476		251.3_1476		251.3_554.7						
C 80 2				20.5_39.1		20.5_39.1		11.1_39.1	7.0_39.1	5.6_39.1	5.6_25.9	5.6_25.9		
C 80 3				43.5_215.8		43.5_215.8		43.5_184.4	43.5_184.4	43.5_184.4				
C 80 4		334.3_1481		261.9_1481		261.9_1481		261.9_724.7						
C 90 2				22.9_35.1		22.9_35.1		12.8_35.1	10.4_35.1	10.4_35.1	5.2_29.4	5.2_29.4	5.2_29.4	
C 90 3				74.4_172.1		74.4_172.1		39.4_172.1	39.4_172.1	39.4_172.1	39.4_96.2	39.4_96.2	39.4_96.2	
C 90 4		339.0_1240		212.4_1240		212.4_1240		212.4_712.2	212.4_712.2	212.4_712.2				
C 100 2						29.6		15.2_29.6	12.5_29.6	12.5_29.6	4.9_29.6	4.9_29.6	4.9_29.6	4.9_29.6
C 100 3						79.4_150.4		42.9_150.4	34.3_150.4	34.3_150.4	34.3_99.8	34.3_99.8	34.3_99.8	34.3_99.8
C 100 4		380.5_1081		162.1_1081		162.1_1081		162.1_775.7	162.1_775.7	162.1_775.7				

(#) **P_{n1}** = max. installierbare Leistung für IEC Motoradapter P_

(B 23)

		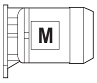						
		M0	**M05**	**M1**	**M2**	**M3**	**M4**	**M5**
C 05 2	i =	27.1_44.7	5.5_44.7	5.5_44.7				
C 12 2			2.8_66.2	2.8_37.0	2.8_47.7	2.8_47.7		
C 22 2			3.7_63.3 ⊖ (7.1_8.7)	3.7_43.3 ⊖ (7.1_8.7)	2.7_54.7	2.7_54.7		
C 22 3			60.0_261.0	60.0_261.0	60.0_261.0	60.0_261.0		
C 32 2				5.0_52.4 ⊖ (7.2_11.2)	2.9_66.8	2.9_66.8	2.9_25.1	
C 32 3			74.7_274.7	74.7_274.7	74.7_274.7	74.7_274.7		
C 36 2				4.6_19.0 ⊖ (6.8_10.6)	2.7_19.0	2.7_19.0	2.7_19.0	
C 36 3				38.1_162.0	22.1_206.4	22.1_206.4	22.1_77.6	
C 36 4			230.9_848.5	230.9_848.5	230.9_848.5	230.9_848.5		
C 41 2				14.2_44.8	2.7_44.8	2.7_44.8	2.7_31.4	
C 41 3				47.0_209.1	28.5_209.1	28.5_209.1	28.5_102.3	
C 41 4			239.9_855.5	239.9_855.5	239.9_855.5	239.9_855.5		
C 51 2				18.9_57.0	2.6_57.0	2.6_57.0	2.6_40.4	2.6_40.4
C 51 3				59.0_216.7	21.8_216.7	21.8_216.7	21.8_124.4	21.8_124.4
C 51 4				240.9_884.9	240.9_884.9	240.9_884.9		
C 61 2					3.7_38.0 ⊖ (6.7_7.5)	3.7_38.0 ⊖ (6.7_7.5)	2.8_38.0	2.8_38.0
C 61 3					26.8_195.8	26.8_195.8	26.8_140.5	26.8_140.5
C 61 4				217.4_796.1	217.4_796.1	217.4_796.1		
C 70 2					14.1_34.7 ⊖ (15.3)	14.1_34.7 ⊖ (15.3)	7.5_34.7 ⊖ (8.0)	7.5_34.7 ⊖ (8.0)
C 70 3					41.3_239.3	41.3_239.3	41.3_137.4	41.3_137.4
C 70 4				251.3_1476	251.3_1476	251.3_1476	251.3_554.7	
C 80 2						20.5_39.1	11.1_39.1	11.1_39.1
C 80 3						43.5_215.8	43.5_184.4	43.5_184.4
C 80 4				334.3_1481	261.9_1481	261.9_1481	261.9_724.7	
C 90 2						22.9_35.1	12.8_35.1	12.8_35.1
C 90 3						74.4_172.1	39.4_172.1	39.4_172.1
C 90 4				339.0_1240	212.4_1240	212.4_1240	212.4_712.2	
C 100 2							15.2_29.6	15.2_29.6
C 100 3							42.9_150.4	42.9_150.4
C 100 4				380.5_1081	162.1_1081	162.1_1081	162.1_775.7	

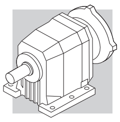

Für viele Servomotoren der wichtigsten Hersteller stehen passende Motoradapter für die Baugrößen C12…C61 zur Verfügung. Die Abmessungen der Servomotor-Eingänge entnehmen Sie bitte dem Zeichnungsteil der verschiedenen Baugrößen. Der Bezeichnungszusatz **SK** steht für Eingänge mit herkömmlicher Passfedernut. Der Zusatz **SC** bezieht sich stattdessen auf Eingänge mit Klemmvorrichtung

(B 24)

		SERVO INPUT							
		SK60A	**SK60B**	**SK80A**	**SK80B**	**SK80C**	**SK95A**	**SK95B**	**SK95C**
		SC60A	**SC60B**	**SC80A**	**SC80B**	**SC80C**	**SC95A**	**SC95B**	**SC95C**
C 12 2	i =	2.8_66.2	2.8_66.2	2.8_66.2		2.8_47.6	2.8_66.2	2.8_47.6	2.8_47.6
C 22 2		3.7_63.3 ⊖ (7.1_8.7)	3.7_63.3 ⊖ (7.1_8.7)	3.7_63.3 ⊖ (7.1_8.7)		2.7_54.7	3.7_63.3 ⊖ (7.1_8.7)	2.7_54.7	2.7_54.7
C 22 3		60.0_261.0	60.0_261.0	60.0_261.0		60.0_261.0	60.0_261.0	60.0_261.0	60.0_261.0
C 32 2		5.0_66.8 ⊖ (7.2_11.2)	5.0_66.8 ⊖ (7.2_11.2)	5.0_66.8 ⊖ (7.2_11.2)		2.9_66.8	5.0_66.8 ⊖ (7.2_11.2)	2.9_66.8	2.9_66.8
C 32 3		74.7_274.7	74.7_274.7	74.7_274.7		74.7_274.7	74.7_274.7	74.7_274.7	74.7_274.7
C 36 2		4.6_19.0 ⊖ (6.8_10.6)	4.6_19.0 ⊖ (6.8_10.6)	4.6_19.0 ⊖ (6.8_10.6)		2.7_19.0	4.6_19.0 ⊖ (6.8_10.6)	2.7_19.0	2.7_19.0
C 36 3		38.1_206.4	38.1_206.4	38.1_206.4		22.1_206.4	38.1_206.4	22.1_206.4	22.1_206.4
C 36 4		230.9_848.5	230.9_848.5	230.9_848.5		230.9_848.5	230.9_848.5	230.9_848.5	230.9_848.5
C 41 2					6.0_44.8 ⊖ (6.4_12.4)	2.7_44.8	6.0_44.8 ⊖ (6.4_12.4)	2.7_44.8	2.7_44.8
C 41 3					47.0_209.1	28.5_209.1	47.0_209.1	28.5_209.1	28.5_209.1
C 41 4		239.9_855.5	239.9_855.5	239.9_855.5		239.9_855.5	239.9_855.5	239.9_855.5	239.9_855.5
C 51 2					18.9_57.0	2.6_57.0	18.9_57.0	2.6_57.0	2.6_57.0
C 51 3					59.0_216.7	21.8_216.7	59.0_216.7	21.8_216.7	21.8_216.7
C 51 4						240.9_884.9	240.9_884.9	240.9_884.9	240.9_884.9
C 61 2						3.7_38.0 ⊖ (6.7_7.5)	22.4_38.0	3.7_38.0 ⊖ (6.7_7.5)	3.7_38.0 ⊖ (6.7_7.5)
C 61 3						26.8_195.8	67.7_195.8	26.8_195.8	26.8_195.8
C 61 4					217.4_796.1	217.4_796.1	217.4_796.1	217.4_796.1	217.4_796.1

(B 25)

		SK110A	**SK110B**	**SK130A**	**SK130B**	**SK180A**	**SK180B**
		SC110A	**SC110B**	**SC130A**	**SC130B**	**SC180A**	**SC180B**
C 12 2	i =	2.8_47.6	2.8_47.6				
C 22 2		2.7_54.7	2.7_54.7				
C 22 3		60.0_261.0	60.0_261.0				
C 32 2		2.9_66.8	2.9_66.8	2.9_66.8			
C 32 3		74.7_274.7	74.7_274.7				
C 36 2		2.7_19.0	2.7_19.0	2.7_19.0			
C 36 3		22.1_206.4	22.1_206.4	22.1_206.4			
C 36 4		230.9_848.5	230.9_848.5				
C 41 2		2.7_44.8	2.7_44.8	2.7_44.8	2.7_31.4	2.7_31.4	2.7_31.4
C 41 3		28.5_209.1	28.5_209.1	28.5_209.1	28.5_102.3	28.5_102.3	28.5_102.3
C 41 4		239.9_855.5	239.9_855.5				
C 51 2		2.6_57.0	2.6_57.0	2.6_57.0	2.6_40.4	2.6_40.4	2.6_40.4
C 51 3		21.8_216.7	21.8_216.7	21.8_216.7	21.8_124.4	21.8_124.4	21.8_124.4
C 51 4		240.9_884.9	240.9_884.9	240.9_884.9			
C 61 2		3.7_38.0 ⊖ (6.7_7.5)	3.7_38.0 ⊖ (6.7_7.5)	3.7_38.0 ⊖ (6.7_7.5)	2.8_38.0	2.8_38.0	2.8_38.0
C 61 3		26.8_195.8	26.8_195.8	26.8_195.8	26.8_140.5	26.8_140.5	26.8_140.5
C 61 4		217.4_796.1	217.4_796.1	217.4_796.1			

28 TRÄGHEITSMOMENT

Die In den folgenden Tabellen angegebenen Trägheitsmomente Jr [kgm^2] beziehen sich auf die Getriebeantriebsachse. Um das Lesen der Tabellen zu erleichtern, werden folgende Symbole ver-wendet:

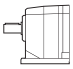

Daten beziehen sich auf Kompaktgetriebe ohne Motor. Um das Gesamtträgheitsmoment des Getriebemotors zu ermitteln, muss nur das Trägheitsmoment des Getriebes mit dem Trägheitsmoment des entsprechenden Motors addiert werden (Wert Elektromotorenauswahltabellen entnehmen).

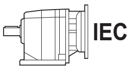

Nur Getriebe vorbereitet für IEC-Motor (IEC-Größe...).

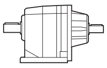

Dieses Symbol bezieht sich auf Getriebewerte.

Nur Getriebe vorbereitet für Servomotor.

C 05

	i	J (•10^{-4}) [kgm^2]
		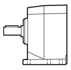
C 05_5.5	5.5	0.29
C 05_6.7	6.7	0.29
C 05_7.4	7.4	0.28
C 05_9.3	9.3	0.17
C 05_11.2	11.2	0.16
C 05_12.5	12.5	0.16
C 05_15.6	15.6	0.09
C 05_18.9	18.9	0.09
C 05_21.0	21.0	0.08
C 05_27.1	27.1	0.04
C 05_32.8	32.8	0.04
C 05_36.4	36.4	0.04
C 05_40.3	40.3	0.03
C 05_44.7	44.7	0.03

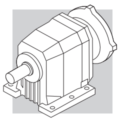

C 12

	i	J (•10^{-4}) [kgm^2]							
		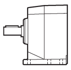	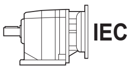 IEC						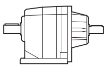
			63	71	80	90	100	112	
C 12 2_2.8	2.8	0.44	1.9	1.9	3.3	3.2	4.5	4.5	1.3
C 12 2_3.2	3.2	0.34	1.8	1.8	3.2	3.1	4.4	4.4	1.2
C 12 2_3.7	3.7	0.29	1.8	1.7	3.1	3.1	4.4	4.4	1.2
C 12 2_4.3	4.3	0.21	1.7	1.7	3.1	3.0	4.3	4.3	1.1
C 12 2_4.9	4.9	0.19	1.7	1.7	3.0	3.0	4.3	4.3	1.1
C 12 2_5.6	5.6	0.15	1.6	1.6	3.0	2.9	4.2	4.2	1.0
C 12 2_6.2	6.2	0.12	1.6	1.6	3.0	2.9	4.2	4.2	1.0
C 12 2_7.6	7.6	0.33	1.8	1.8	3.2	3.1	4.4	4.4	1.2
C 12 2_8.8	8.8	0.32	1.8	1.8	3.2	3.1	4.4	4.4	1.2
C 12 2_10.1	10.1	0.23	1.7	1.7	3.1	3.0	4.3	4.3	1.1
C 12 2_11.9	11.9	0.17	1.6	1.6	3.0	3.0	4.2	4.2	1.1
C 12 2_13.4	13.4	0.16	1.6	1.6	3.0	2.9	4.2	4.2	1.1
C 12 2_15.4	15.4	0.12	1.6	1.6	3.0	2.9	4.2	4.2	1.0
C 12 2_17.2	17.2	0.10	1.6	1.6	2.9	2.9	4.2	4.2	1.0
C 12 2_18.4	18.4	0.08	1.6	1.5	2.9	2.9	4.2	4.2	0.98
C 12 2_20.6	20.6	0.08	1.5	1.5	2.9	2.9	4.2	4.2	0.98
C 12 2_23.2	23.2	0.07	1.5	1.5	2.9	2.9	4.1	4.1	0.97
C 12 2_25.4	25.4	0.06	1.5	1.5	2.9	2.8	4.1	4.1	0.96
C 12 2_29.5	29.5	0.05	1.5	1.5	2.9	2.8	4.1	4.1	0.95
C 12 2_32.8	32.8	0.04	1.5	1.5	2.9	2.8	4.1	4.1	0.94
C 12 2_37.0	37.0	0.03	1.5	1.5	2.9	2.8	4.1	4.1	0.93
C 12 2_42.3	42.3	0.03	1.5	1.5	2.9	2.8	4.1	4.1	0.93
C 12 2_47.6	47.6	0.02	1.5	1.5	2.9	2.8	4.1	4.1	0.92
C 12 2_55.2	55.2	0.02	1.5	1.5	—	—	—	—	0.92
C 12 2_66.2	66.2	0.01	1.5	1.5	—	—	—	—	0.91

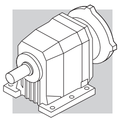

C 12

		J (•10-4) [kgm2]									
		SERVO									
	i	60A		60B 80A		95A		80C 95B 110A		95C 110B	
		SK	SC	SK	SC	SK	SC	SK	SC	SK	SC
C 12 2_2.8	2.8	0.71	0.97	0.73	1.2	3.3	3.7	3.3	3.8	3.2	4.2
C 12 2_3.2	3.2	0.61	0.87	0.63	1.1	3.2	3.6	3.2	3.7	3.1	4.1
C 12 2_3.7	3.7	0.56	0.82	0.58	1.0	3.1	3.5	3.1	3.6	3.1	4.1
C 12 2_4.3	4.3	0.48	0.74	0.50	0.94	3.0	3.5	3.1	3.6	3.0	4.0
C 12 2_4.9	4.9	0.46	0.72	0.48	0.92	3.0	3.4	3.0	3.5	3.0	4.0
C 12 2_5.6	5.6	0.42	0.68	0.44	0.88	3.0	3.4	3.0	3.5	2.9	3.9
C 12 2_6.2	6.2	0.39	0.65	0.41	0.85	2.9	3.4	3.0	3.5	2.9	3.9
C 12 2_7.6	7.6	0.60	0.86	0.62	1.1	3.2	3.6	3.2	3.7	3.1	4.1
C 12 2_8.8	8.8	0.59	0.85	0.61	1.0	3.1	3.6	3.2	3.7	3.1	4.1
C 12 2_10.1	10.1	0.50	0.76	0.52	0.96	3.1	3.5	3.1	3.6	3.0	4.0
C 12 2_11.9	11.9	0.44	0.70	0.46	0.90	3.0	3.4	3.0	3.5	3.0	4.0
C 12 2_13.4	13.4	0.43	0.69	0.45	0.83	3.0	3.4	3.0	3.5	2.9	3.9
C 12 2_15.4	15.4	0.39	0.65	0.41	0.85	2.9	3.4	3.0	3.5	2.9	3.9
C 12 2_17.2	17.2	0.37	0.63	0.39	0.83	2.9	3.4	2.9	3.4	2.9	3.9
C 12 2_18.4	18.4	0.35	0.61	0.37	0.81	2.9	3.3	2.9	3.4	2.9	3.9
C 12 2_20.6	20.6	0.35	0.61	0.37	0.81	2.9	3.3	2.9	3.4	2.9	3.9
C 12 2_23.2	23.2	0.34	0.60	0.36	0.80	2.9	3.3	2.9	3.4	2.9	3.9
C 12 2_25.4	25.4	0.33	0.59	0.35	0.79	2.9	3.3	2.9	3.4	2.8	3.8
C 12 2_29.5	29.5	0.32	0.58	0.34	0.78	2.9	3.3	2.9	3.4	2.8	3.8
C 12 2_32.8	32.8	0.34	0.60	0.33	0.77	2.9	3.3	2.9	3.4	2.8	3.8
C 12 2_37.0	37.0	0.30	0.56	0.32	0.76	2.9	3.3	2.9	3.4	2.8	3.8
C 12 2_42.3	42.3	0.30	0.56	0.32	0.76	2.9	3.3	2.9	3.4	2.8	3.8
C 12 2_47.6	47.6	0.29	0.55	0.31	0.75	2.8	3.3	2.9	3.4	2.8	3.8
C 12 2_55.2	55.2	0.29	0.55	0.31	0.75	2.8	3.3	—	—	—	—
C 12 2_66.2	66.2	0.28	0.54	0.30	0.74	2.8	3.3	—	—	—	—

C 22

	i	**J** (•10^{-4}) [kgm^2]							
		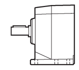	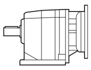 **IEC**						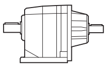
			63	**71**	**80**	**90**	**100**	**112**	
C 22 2_2.7	2.7	1.2	—	—	4.0	4.0	5.3	5.3	3.1
C 22 2_3.3	3.3	0.83	—	—	3.7	3.6	4.9	4.9	2.7
C 22 2_3.7	3.7	0.72	2.2	2.2	3.6	3.5	4.8	4.8	2.6
C 22 2_4.3	4.3	0.56	2.0	2.0	3.4	3.3	4.6	4.6	2.4
C 22 2_4.8	4.8	0.48	2.0	1.9	3.3	3.3	4.6	4.6	2.4
C 22 2_5.6	5.6	0.36	1.8	1.8	3.2	3.2	4.4	4.4	2.2
C 22 2_6.1	6.1	0.29	1.8	1.7	3.1	3.1	4.4	4.4	2.2
C 22 2_7.1	7.1	0.77	—	—	3.6	3.6	4.8	4.8	2.6
C 22 2_8.7	8.7	0.55	—	—	3.4	3.3	4.6	4.6	2.4
C 22 2_9.6	9.6	0.50	2.0	2.0	3.3	3.3	4.6	4.6	2.4
C 22 2_11.1	11.1	0.39	1.9	1.8	3.2	3.2	4.5	4.5	2.3
C 22 2_12.4	12.4	0.35	1.8	1.8	3.2	3.1	4.4	4.4	2.2
C 22 2_14.5	14.5	0.36	1.7	1.7	3.1	3.1	4.3	4.3	2.1
C 22 2_15.8	15.8	0.20	1.7	1.7	3.1	3.0	4.3	4.3	2.1
C 22 2_18.1	18.1	0.18	1.6	1.6	3.0	3.0	4.3	4.3	2.0
C 22 2_20.0	20.0	0.15	1.6	1.6	3.0	2.9	4.2	4.2	2.0
C 22 2_21.5	21.5	0.13	1.6	1.6	3.0	2.9	4.2	4.2	2.0
C 22 2_24.3	24.3	0.12	1.6	1.6	3.0	2.9	4.2	4.2	2.0
C 22 2_27.2	27.2	0.10	1.6	1.6	3.0	2.9	4.2	4.2	2.0
C 22 2_29.6	29.6	0.09	1.6	1.5	2.9	2.9	4.2	4.2	2.0
C 22 2_33.1	33.1	0.07	1.5	1.5	2.9	2.9	4.2	4.2	1.9
C 22 2_36.8	36.8	0.06	1.5	1.5	2.9	2.8	4.1	4.1	1.9
C 22 2_43.3	43.3	0.05	1.5	1.5	2.9	2.8	4.1	4.1	1.9
C 22 2_48.6	48.6	0.04	1.5	1.5	2.9	2.8	4.1	4.1	1.9
C 22 2_54.7	54.7	0.03	1.5	1.5	2.9	2.8	4.1	4.1	1.9
C 22 2_63.3	63.3	0.02	1.5	1.5	—	—	—	—	1.9
C 22 3_60.0	60.0	0.04	1.5	1.5	2.9	2.8	4.1	4.1	0.94
C 22 3_65.3	65.3	0.03	1.5	1.5	2.9	2.8	4.1	4.1	0.93
C 22 3_74.8	74.8	0.03	1.5	1.5	2.9	2.8	4.1	4.1	0.93
C 22 3_82.6	82.6	0.03	1.5	1.5	2.9	2.8	4.1	4.1	0.93
C 22 3_88.5	88.5	0.03	1.5	1.5	2.9	2.8	4.1	4.1	0.93
C 22 3_100.2	100.2	0.03	1.5	1.5	2.9	2.8	4.1	4.1	0.93
C 22 3_112.0	112.0	0.03	1.5	1.5	2.9	2.8	4.1	4.1	0.93
C 22 3_122.2	122.2	0.03	1.5	1.5	2.9	2.8	4.1	4.1	0.93
C 22 3_136.5	136.5	0.02	1.5	1.5	2.9	2.8	4.1	4.1	0.92
C 22 3_151.7	151.7	0.02	1.5	1.5	2.9	2.8	4.1	4.1	0.92
C 22 3_178.5	178.5	0.02	1.5	1.5	2.9	2.8	4.1	4.1	0.92
C 22 3_200.7	200.7	0.02	1.5	1.5	2.9	2.8	4.1	4.1	0.92
C 22 3_225.8	225.8	0.02	1.5	1.5	2.9	2.8	4.1	4.1	0.92
C 22 3_261.0	261.0	0.02	1.5	1.5	2.9	2.8	4.1	4.1	0.92

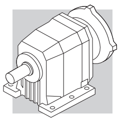

C 22

	i	J (•10⁻⁴) [kgm²]									
		SERVO									
		60A		60B 80A		95A		80C 95B 110A		95C 110B	
		SK	SC	SK	SC	SK	SC	SK	SC	SK	SC
C 22 2_2.7	2.7	—	—	—	—	—	—	4.0	4.5	4.0	5.0
C 22 2_3.3	3.3	—	—	—	—	—	—	3.7	4.2	3.6	4.6
C 22 2_3.7	3.7	0.99	1.3	1.0	1.4	3.5	4.0	3.6	4.1	3.5	4.5
C 22 2_4.3	4.3	0.83	1.1	0.85	1.3	3.4	3.8	3.4	3.9	3.3	4.3
C 22 2_4.8	4.8	0.75	1.0	0.77	1.2	3.3	3.7	3.3	3.8	3.3	4.3
C 22 2_5.6	5.6	0.63	0.89	0.65	1.1	3.2	3.6	3.2	3.7	3.2	4.2
C 22 2_6.1	6.1	0.56	0.82	0.58	1.0	3.1	3.5	3.1	3.6	3.1	4.1
C 22 2_7.1	7.1	—	—	—	—	—	—	3.6	4.1	3.6	4.6
C 22 2_8.7	8.7	—	—	—	—	—	—	3.4	3.9	3.3	4.3
C 22 2_9.6	9.6	0.77	1.0	0.79	1.2	3.3	3.8	3.3	3.8	3.3	4.3
C 22 2_11.1	11.1	0.66	0.92	0.68	1.1	3.2	3.6	3.2	3.7	3.2	4.2
C 22 2_12.4	12.4	0.62	0.88	0.64	1.1	3.2	3.6	3.2	3.7	3.1	4.1
C 22 2_14.5	14.5	0.63	0.89	0.65	1.1	3.2	3.6	3.1	3.6	3.1	4.1
C 22 2_15.8	15.8	0.47	0.73	0.49	0.93	3.0	3.5	3.1	3.6	3.0	4.0
C 22 2_18.1	18.1	0.45	0.71	0.47	0.91	3.0	3.4	3.0	3.5	3.0	4.0
C 22 2_20.0	20.0	0.42	0.68	0.44	0.88	3.0	3.4	3.0	3.5	2.9	3.9
C 22 2_21.5	21.5	0.40	0.66	0.42	0.86	3.0	3.4	3.0	3.5	2.9	3.9
C 22 2_24.3	24.3	0.39	0.65	0.41	0.85	2.9	3.4	3.0	3.5	2.9	3.9
C 22 2_27.2	27.2	0.37	0.63	0.39	0.83	2.9	3.4	3.0	3.5	2.9	3.9
C 22 2_29.6	29.6	0.36	0.62	0.38	0.82	2.9	3.3	2.9	3.4	2.9	3.9
C 22 2_33.1	33.1	0.34	0.60	0.36	0.80	2.9	3.3	2.9	3.4	2.9	3.9
C 22 2_36.8	36.8	0.33	0.59	0.35	0.79	2.9	3.3	2.9	3.4	2.8	3.8
C 22 2_43.3	43.3	0.32	0.58	0.34	0.78	2.9	3.3	2.9	3.4	2.8	3.8
C 22 2_48.6	48.6	0.31	0.57	0.33	0.77	2.9	3.3	2.9	3.4	2.8	3.8
C 22 2_54.7	54.7	0.30	0.56	0.32	0.76	2.9	3.3	2.9	3.4	2.8	3.8
C 22 2_63.3	63.3	0.29	0.55	0.31	0.75	2.8	3.3	—	—	—	—
C 22 3_60.0	60.0	0.31	0.57	0.33	0.77	2.9	3.3	2.9	3.4	2.8	3.8
C 22 3_65.3	65.3	0.30	0.56	0.32	0.76	2.9	3.3	2.9	3.4	2.8	3.8
C 22 3_74.8	74.8	0.30	0.56	0.32	0.76	2.9	3.3	2.9	3.4	2.8	3.8
C 22 3_82.6	82.6	0.30	0.56	0.32	0.76	2.9	3.3	2.9	3.4	2.8	3.8
C 22 3_88.5	88.5	0.30	0.56	0.32	0.76	2.9	3.3	2.9	3.4	2.8	3.8
C 22 3_100.2	100.2	0.30	0.56	0.32	0.76	2.9	3.3	2.9	3.4	2.8	3.8
C 22 3_112.0	112.0	0.30	0.56	0.32	0.76	2.9	3.3	2.9	3.4	2.8	3.8
C 22 3_122.2	122.2	0.30	0.56	0.32	0.76	2.9	3.3	2.9	3.4	2.8	3.8
C 22 3_136.5	136.5	0.29	0.55	0.31	0.75	2.8	3.3	2.9	3.4	2.8	3.8
C 22 3_151.7	151.7	0.29	0.55	0.31	0.75	2.8	3.3	2.9	3.4	2.8	3.8
C 22 3_178.5	178.5	0.29	0.55	0.31	0.75	2.8	3.3	2.9	3.4	2.8	3.8
C 22 3_200.7	200.7	0.29	0.55	0.31	0.75	2.8	3.3	2.9	3.4	2.8	3.8
C 22 3_225.8	225.8	0.29	0.55	0.31	0.75	2.8	3.3	2.9	3.4	2.8	3.8
C 22 3_261.0	261.0	0.29	0.55	0.31	0.75	2.8	3.3	2.9	3.4	2.8	3.8

C 32

	i	**J** (•10^{-4}) [kgm^2]								
		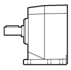	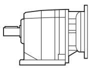 **IEC**							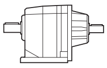
			63	**71**	**80**	**90**	**100**	**112**	**132**	
C 32 2_2.9	2.9	2.3	—	—	5.2	5.1	6.4	6.4	20	4.6
C 32 2_3.4	3.4	1.8	—	—	4.6	4.6	5.9	5.9	20	4.0
C 32 2_3.7	3.7	1.6	—	—	4.4	4.3	5.6	5.6	20	3.8
C 32 2_4.5	4.5	1.2	—	—	4.0	4.0	5.2	5.2	19	3.4
C 32 2_5.0	5.0	0.87	2.3	2.3	3.7	3.7	5.0	5.0	19	3.1
C 32 2_5.7	5.7	0.82	2.3	2.3	3.7	3.6	4.9	4.9	19	3.0
C 32 2_6.3	6.3	0.63	2.1	2.1	3.5	3.4	4.7	4.7	18	2.8
C 32 2_7.2	7.2	1.5	—	—	4.4	4.3	5.6	5.6	19	3.7
C 32 2_8.5	8.5	1.2	—	—	4.1	4.0	5.3	5.3	19	3.4
C 32 2_9.3	9.3	1.1	—	—	3.9	3.9	5.1	5.1	19	3.3
C 32 2_11.2	11.2	0.83	—	—	3.7	3.6	4.9	4.9	19	3.0
C 32 2_12.3	12.3	0.60	2.1	2.1	3.4	3.4	4.7	4.7	18	2.8
C 32 2_14.1	14.1	0.61	2.1	2.1	3.5	3.4	4.7	4.7	18	2.8
C 32 2_15.6	15.6	0.46	1.9	1.9	3.3	3.2	4.5	4.5	18	2.7
C 32 2_18.2	18.2	0.42	1.9	1.9	3.3	3.2	4.5	4.5	18	2.6
C 32 2_20.1	20.1	0.34	1.8	1.8	3.2	3.1	4.4	4.4	18	2.6
C 32 2_22.9	22.9	0.31	1.8	1.8	3.2	3.1	4.4	4.4	17	2.5
C 32 2_25.1	25.1	0.25	1.7	1.7	3.1	3.0	4.3	4.3	17	2.5
C 32 2_26.9	26.9	0.24	1.7	1.7	3.1	3.0	4.3	4.3	—	2.5
C 32 2_29.8	29.8	0.19	1.7	1.7	3.0	3.0	4.3	4.3	—	2.4
C 32 2_33.1	33.1	0.19	1.7	1.7	3.0	3.0	4.3	4.3	—	2.4
C 32 2_36.1	36.1	0.14	1.6	1.6	3.0	2.9	4.2	4.2	—	2.4
C 32 2_40.7	40.7	0.14	1.6	1.6	3.0	2.9	4.2	4.2	—	2.4
C 32 2_45.3	45.3	0.10	1.6	1.6	3.0	2.9	4.2	4.2	—	2.3
C 32 2_52.4	52.4	0.08	1.6	1.6	2.9	2.9	4.2	4.2	—	2.3
C 32 2_59.4	59.4	0.07	1.5	1.5	2.9	2.9	4.2	4.2	—	2.3
C 32 2_66.8	66.8	0.05	1.5	1.5	2.9	2.8	4.1	4.1	—	2.3
C 32 3_74.7	74.7	0.06	1.5	1.5	2.9	2.9	4.1	4.1	—	0.96
C 32 3_82.6	82.6	0.06	1.5	1.5	2.9	2.8	4.1	4.1	—	0.96
C 32 3_94.2	94.2	0.06	1.5	1.5	2.9	2.8	4.1	4.1	—	0.96
C 32 3_103.3	103.3	0.05	1.5	1.5	2.9	2.8	4.1	4.1	—	0.95
C 32 3_110.6	110.6	0.05	1.5	1.5	2.9	2.8	4.1	4.1	—	0.95
C 32 3_122.4	122.4	0.05	1.5	1.5	2.9	2.8	4.1	4.1	—	0.95
C 32 3_136.0	136.0	0.05	1.5	1.5	2.9	2.8	4.1	4.1	—	0.95
C 32 3_148.4	148.4	0.05	1.5	1.5	2.9	2.8	4.1	4.1	—	0.95
C 32 3_167.4	167.4	0.05	1.5	1.5	2.9	2.8	4.1	4.1	—	0.95
C 32 3_186.0	186.0	0.04	1.5	1.5	2.9	2.8	4.1	4.1	—	0.94
C 32 3_215.6	215.6	0.04	1.5	1.5	2.9	2.8	4.1	4.1	—	0.94
C 32 3_244.2	244.2	0.04	1.5	1.5	2.9	2.8	4.1	4.1	—	0.94
C 32 3_274.7	274.7	0.04	1.5	1.5	2.9	2.8	4.1	4.1	—	0.94

C 32

	i	J (•10⁻⁴) [kgm²] SERVO 60A		60B 80A		95A		80C 95B 110A		95C 110B		130A	
		SK	SC	SK	SC	SK	SC	SK	SC	SK	SC	SK	SC
C 32 2_2.9	2.9	—	—	—	—	—	—	5.2	5.7	5.1	6.1	5.1	6.1
C 32 2_3.4	3.4	—	—	—	—	—	—	4.6	5.1	4.6	5.6	4.6	5.6
C 32 2_3.7	3.7	—	—	—	—	—	—	4.4	4.9	4.3	5.3	4.3	5.3
C 32 2_4.5	4.5	—	—	—	—	—	—	4.0	4.5	4.0	5.0	4.0	5.0
C 32 2_5.0	5.0	1.1	1.4	1.2	1.6	3.7	4.1	3.7	4.2	3.7	4.7	3.7	4.7
C 32 2_5.7	5.7	1.1	1.4	1.1	1.5	3.6	4.1	3.7	4.2	3.6	4.6	3.6	4.6
C 32 2_6.3	6.3	0.90	1.2	0.92	1.4	3.5	3.9	3.5	4.0	3.4	4.4	3.4	4.4
C 32 2_7.2	7.2	—	—	—	—	—	—	4.4	4.9	4.3	5.3	4.3	5.3
C 32 2_8.5	8.5	—	—	—	—	—	—	4.1	4.6	4.0	5.0	4.0	5.0
C 32 2_9.3	9.3	—	—	—	—	—	—	3.9	4.4	3.9	4.9	3.9	4.9
C 32 2_11.2	11.2	—	—	—	—	—	—	3.7	4.2	3.6	4.6	3.6	4.6
C 32 2_12.3	12.3	0.87	1.1	0.89	1.3	3.4	3.9	3.4	3.9	3.4	4.4	3.4	4.4
C 32 2_14.1	14.1	0.88	1.1	0.90	1.3	3.4	3.9	3.5	4.0	3.4	4.4	3.4	4.4
C 32 2_15.6	15.6	0.73	0.99	0.75	1.2	3.3	3.7	3.3	3.8	3.2	4.2	3.2	4.2
C 32 2_18.2	18.2	0.69	0.95	0.71	1.1	3.2	3.7	3.3	3.8	3.2	4.2	3.2	4.2
C 32 2_20.1	20.1	0.61	0.87	0.63	1.1	3.2	3.6	3.2	3.7	3.1	4.1	3.1	4.1
C 32 2_22.9	22.9	0.58	0.84	0.60	1.0	3.1	3.6	3.2	3.7	3.1	4.1	3.1	4.1
C 32 2_25.1	25.1	0.52	0.78	0.54	0.98	3.1	3.5	3.1	3.6	3.0	4.0	3.0	4.0
C 32 2_26.9	26.9	0.51	0.77	0.53	0.97	3.1	3.5	3.1	3.6	3.0	4.0	3.0	4.0
C 32 2_29.8	29.8	0.46	0.72	0.48	0.92	3.0	3.4	3.0	3.5	3.0	4.0	3.0	4.0
C 32 2_33.1	33.1	0.46	0.72	0.48	0.92	3.0	3.4	3.0	3.5	3.0	4.0	3.0	4.0
C 32 2_36.1	36.1	0.41	0.67	0.43	0.87	3.0	3.4	3.0	3.5	2.9	3.9	2.9	3.9
C 32 2_40.7	40.7	0.41	0.67	0.43	0.87	3.0	3.4	3.0	3.5	2.9	3.9	2.9	3.9
C 32 2_45.3	45.3	0.37	0.63	0.39	0.83	2.9	3.4	3.0	3.5	2.9	3.9	2.9	3.9
C 32 2_52.4	52.4	0.35	0.61	0.37	0.81	2.9	3.3	2.9	3.4	2.9	3.9	2.9	3.9
C 32 2_59.4	59.4	0.34	0.60	0.36	0.80	2.9	3.3	2.9	3.4	2.9	3.9	2.9	3.9
C 32 2_66.8	66.8	0.32	0.58	0.34	0.78	2.9	3.3	2.9	3.4	2.8	3.8	2.8	3.8
C 32 3_74.7	74.7	0.33	0.59	0.35	0.79	2.9	3.3	2.9	3.4	2.9	3.9	—	—
C 32 3_82.6	82.6	0.33	0.59	0.35	0.79	2.9	3.3	2.9	3.4	2.8	3.8	—	—
C 32 3_94.2	94.2	0.33	0.59	0.35	0.79	2.9	3.3	2.9	3.4	2.8	3.8	—	—
C 32 3_103.3	103.3	0.32	0.58	0.34	0.78	2.9	3.3	2.9	3.4	2.8	3.8	—	—
C 32 3_110.6	110.6	0.32	0.58	0.34	0.78	2.9	3.3	2.9	3.4	2.8	3.8	—	—
C 32 3_122.4	122.4	0.32	0.58	0.34	0.78	2.9	3.3	2.9	3.4	2.8	3.8	—	—
C 32 3_136.0	136.0	0.32	0.58	0.34	0.78	2.9	3.3	2.9	3.4	2.8	3.8	—	—
C 32 3_148.4	148.4	0.32	0.58	0.34	0.78	2.9	3.3	2.9	3.4	2.8	3.8	—	—
C 32 3_167.4	167.4	0.32	0.58	0.34	0.78	2.9	3.3	2.9	3.4	2.8	3.8	—	—
C 32 3_186.0	186.0	0.31	0.57	0.33	0.77	2.9	3.3	2.9	3.4	2.8	3.8	—	—
C 32 3_215.6	215.6	0.31	0.57	0.33	0.77	2.9	3.3	2.9	3.4	2.8	3.8	—	—
C 32 3_244.2	244.2	0.31	0.57	0.33	0.77	2.9	3.3	2.9	3.4	2.8	3.8	—	—
C 32 3_274.7	274.7	0.31	0.57	0.33	0.77	2.9	3.3	2.9	3.4	2.8	3.8	—	—

C 36

		J ($\cdot 10^{-4}$) [kgm^2]								
	i	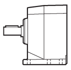	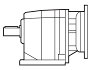 IEC							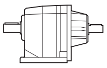
			63	71	80	90	100	112	132	
C 36 2_2.7	2.7	3.6	—	—	6.5	6.4	7.7	7.7	22	14
C 36 2_3.2	3.2	2.5	—	—	5.4	5.3	6.6	6.6	21	13
C 36 2_3.5	3.5	2.4	—	—	5.3	5.2	6.5	6.5	20	13
C 36 2_4.2	4.2	1.6	—	—	4.5	4.4	5.7	5.7	20	12
C 36 2_4.6	4.6	1.5	3.0	3.0	4.4	4.3	5.6	5.6	19	12
C 36 2_5.3	5.3	1.1	2.6	2.6	4.0	3.9	5.2	5.2	19	12
C 36 2_5.8	5.8	0.98	2.5	2.5	3.9	3.8	5.1	5.1	19	12
C 36 2_6.8	6.8	2.2	—	—	5.1	5.0	6.3	6.3	20	13
C 36 2_8.0	8.0	1.6	—	—	4.4	4.3	5.6	5.6	20	12
C 36 2_8.8	8.8	1.5	—	—	4.4	4.3	5.6	5.6	19	12
C 36 2_10.6	10.6	1.1	—	—	3.9	3.8	5.1	5.1	19	12
C 36 2_11.7	11.7	1.0	2.5	2.5	3.9	3.8	5.1	5.1	19	12
C 36 2_13.3	13.3	0.69	2.2	2.2	3.6	3.5	4.8	4.8	19	11
C 36 2_14.8	14.8	0.68	2.2	2.2	3.6	3.5	4.8	4.8	19	11
C 36 2_17.2	17.2	0.47	2.0	2.0	3.4	3.3	4.6	4.6	18	11
C 36 2_19.0	19.0	0.47	2.0	2.0	3.4	3.3	4.6	4.6	18	11
C 36 3_22.1	22.1	1.8	—	—	4.7	4.6	5.9	5.9	19	12
C 36 3_26.2	26.2	1.3	—	—	4.2	4.1	5.4	5.4	19	12
C 36 3_28.7	28.7	1.3	—	—	4.2	4.1	5.4	5.4	19	12
C 36 3_34.6	34.6	0.88	—	—	3.8	3.7	5.0	5.0	19	11
C 36 3_38.1	38.1	0.90	2.4	2.4	3.8	3.7	5.0	5.0	19	11
C 36 3_43.5	43.5	0.59	2.1	2.1	3.5	3.4	4.7	4.7	19	11
C 36 3_48.2	48.2	0.60	2.1	2.1	3.5	3.4	4.7	4.7	19	11
C 36 3_56.2	56.2	0.41	1.9	1.9	3.3	3.2	4.5	4.5	18	11
C 36 3_62.0	62.0	0.42	1.9	1.9	3.3	3.2	4.5	4.5	18	11
C 36 3_70.8	70.8	0.30	1.8	1.8	3.2	3.1	4.4	4.4	18	11
C 36 3_77.6	77.6	0.28	1.8	1.8	3.2	3.1	4.4	4.4	17	11
C 36 3_83.1	83.1	0.24	1.7	1.7	3.1	3.0	4.3	4.3	—	11
C 36 3_91.9	91.9	0.21	1.7	1.7	3.1	3.0	4.3	4.3	—	11
C 36 3_102.2	102.2	0.19	1.7	1.7	3.1	3.0	4.3	4.3	—	11
C 36 3_111.5	111.5	0.16	1.7	1.7	3.1	3.0	4.3	4.3	—	11
C 36 3_125.8	125.8	0.14	1.6	1.6	3.0	2.9	4.2	4.2	—	11
C 36 3_139.8	139.8	0.11	1.6	1.6	3.0	2.9	4.2	4.2	—	11
C 36 3_162.0	162.0	0.09	1.6	1.6	3.0	2.9	4.2	4.2	—	11
C 36 3_183.5	183.5	0.07	1.6	1.6	3.0	2.9	4.2	4.2	—	11
C 36 3_206.4	206.4	0.06	1.6	1.6	3.0	2.9	4.2	4.2	—	11
C 36 4_230.9	230.9	0.08	—	—	—	—	—	—	—	—
C 36 4_255.0	255.0	0.08	1.6	1.6	3.0	2.9	4.2	4.2	—	0.90
C 36 4_290.9	290.9	0.07	1.6	1.6	3.0	2.9	4.2	4.2	—	0.89
C 36 4_318.9	318.9	0.07	1.6	1.6	3.0	2.9	4.2	4.2	—	0.89
C 36 4_341.7	341.7	0.07	1.6	1.6	3.0	2.9	4.2	4.2	—	0.89
C 36 4_377.9	377.9	0.07	1.6	1.6	3.0	2.9	4.2	4.2	—	0.89
C 36 4_420.2	420.2	0.06	1.6	1.6	3.0	2.9	4.2	4.2	—	0.88
C 36 4_458.4	458.4	0.06	1.6	1.6	3.0	2.9	4.2	4.2	—	0.88
C 36 4_517.2	517.2	0.06	1.6	1.6	3.0	2.9	4.2	4.2	—	0.88
C 36 4_574.7	574.7	0.06	1.6	1.6	3.0	2.9	4.2	4.2	—	0.88
C 36 4_665.9	665.9	0.06	1.6	1.6	3.0	2.9	4.2	4.2	—	0.88
C 36 4_754.2	754.2	0.06	1.6	1.6	3.0	2.9	4.2	4.2	—	0.88
C 36 4_848.5	848.5	0.06	1.6	1.6	3.0	2.9	4.2	4.2	—	0.88

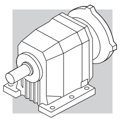

C 36

	i	J (•10-4) [kgm2]											
		SERVO											
		60A		60B 80A		95A		80C 95B 110A		95C 110B		130A	
		SK	SC	SK	SC	SK	SC	SK	SC	SK	SC	SK	SC
C 36 2_2.7	2.7	—	—	—	—	—	—	6.5	7.0	6.4	7.4	6.4	7.4
C 36 2_3.2	3.2	—	—	—	—	—	—	5.4	5.9	5.3	6.3	5.3	6.3
C 36 2_3.5	3.5	—	—	—	—	—	—	5.3	5.8	5.2	6.2	5.2	6.2
C 36 2_4.2	4.2	—	—	—	—	—	—	4.5	5.0	4.4	5.4	4.4	5.4
C 36 2_4.6	4.6	1.8	2.0	1.8	2.2	4.3	4.7	4.4	4.9	4.3	5.3	4.3	5.3
C 36 2_5.3	5.3	1.4	1.6	1.4	1.8	3.9	4.4	4.0	4.5	3.9	4.9	3.9	4.9
C 36 2_5.8	5.8	1.3	1.5	1.3	1.7	3.8	4.2	3.9	4.4	3.8	4.8	3.8	4.8
C 36 2_6.8	6.8	—	—	—	—	—	—	5.1	5.6	5.0	6.0	5.0	6.0
C 36 2_8.0	8.0	—	—	—	—	—	—	4.4	4.9	4.3	5.3	4.3	5.3
C 36 2_8.8	8.8	—	—	—	—	—	—	4.4	4.9	4.3	5.3	4.3	5.3
C 36 2_10.6	10.6	—	—	—	—	—	—	3.9	4.4	3.8	4.8	3.8	4.8
C 36 2_11.7	11.7	1.3	1.5	1.3	1.7	3.8	4.3	3.9	4.4	3.8	4.8	3.8	4.8
C 36 2_13.3	13.3	0.96	1.2	0.98	1.4	3.5	3.9	3.6	4.1	3.5	4.5	3.5	4.5
C 36 2_14.8	14.8	0.95	1.2	0.97	1.4	3.5	3.9	3.6	4.1	3.5	4.5	3.5	4.5
C 36 2_17.2	17.2	0.74	1.0	0.76	1.2	3.3	3.7	3.4	3.9	3.3	4.3	3.3	4.3
C 36 2_19.0	19.0	0.74	1.0	0.76	1.2	3.3	3.7	3.4	3.9	3.3	4.3	3.3	4.3
C 36 3_22.1	22.1	—	—	—	—	—	—	4.7	5.2	4.6	5.6	4.6	5.6
C 36 3_26.2	26.2	—	—	—	—	—	—	4.2	4.7	4.1	5.1	4.1	5.1
C 36 3_28.7	28.7	—	—	—	—	—	—	4.2	4.7	4.1	5.1	4.1	5.1
C 36 3_34.6	34.6	—	—	—	—	—	—	3.8	4.3	3.7	4.7	3.7	4.7
C 36 3_38.1	38.1	1.2	1.4	1.2	1.6	3.7	4.2	3.8	4.3	3.7	4.7	3.7	4.7
C 36 3_43.5	43.5	0.86	1.1	0.88	1.3	3.4	3.8	3.5	4.0	3.4	4.4	3.4	4.4
C 36 3_48.2	48.2	0.87	1.1	0.89	1.3	3.4	3.9	3.5	4.0	3.4	4.4	3.4	4.4
C 36 3_56.2	56.2	0.68	0.94	0.70	1.1	3.2	3.7	3.3	3.8	3.2	4.2	3.2	4.2
C 36 3_62.0	62.0	0.69	0.95	0.71	1.1	3.2	3.7	3.3	3.8	3.2	4.2	3.2	4.2
C 36 3_70.8	70.8	0.57	0.83	0.59	1.0	3.1	3.6	3.2	3.7	3.1	4.1	3.1	4.1
C 36 3_77.6	77.6	0.55	0.81	0.57	1.0	3.1	3.5	3.2	3.7	3.1	4.1	3.1	4.1
C 36 3_83.1	83.1	0.51	0.77	0.53	0.97	3.1	3.5	3.1	3.6	3.0	4.0	3.0	4.0
C 36 3_91.9	91.9	0.48	0.74	0.50	0.94	3.0	3.5	3.1	3.6	3.0	4.0	3.0	4.0
C 36 3_102.2	102.2	0.46	0.72	0.48	0.92	3.0	3.4	3.1	3.6	3.0	4.0	3.0	4.0
C 36 3_111.5	111.5	0.43	0.69	0.45	0.89	3.0	3.4	3.1	3.6	3.0	4.0	3.0	4.0
C 36 3_125.8	125.8	0.41	0.67	0.43	0.87	3.0	3.4	3.0	3.5	2.9	3.9	2.9	3.9
C 36 3_139.8	139.8	0.38	0.64	0.40	0.84	2.9	3.4	3.0	3.5	2.9	3.9	2.9	3.9
C 36 3_162.0	162.0	0.36	0.62	0.38	0.82	2.9	3.3	3.0	3.5	2.9	3.9	2.9	3.9
C 36 3_183.5	183.5	0.34	0.60	0.36	0.80	2.9	3.3	3.0	3.5	2.9	3.9	2.9	3.9
C 36 3_206.4	206.4	0.33	0.59	0.35	0.79	2.9	3.3	3.0	3.5	2.9	3.9	2.9	3.9
C 36 4_230.9	230.9	0.35	0.61	0.37	0.81	2.9	3.3	3.0	3.5	2.9	3.9	—	—
C 36 4_255.0	255.0	0.35	0.61	0.37	0.81	2.9	3.3	3.0	3.5	2.9	3.9	—	—
C 36 4_290.9	290.9	0.34	0.60	0.36	0.80	2.9	3.3	3.0	3.5	2.9	3.9	—	—
C 36 4_318.9	318.9	0.34	0.60	0.36	0.80	2.9	3.3	3.0	3.5	2.9	3.9	—	—
C 36 4_341.7	341.7	0.34	0.60	0.36	0.80	2.9	3.3	3.0	3.5	2.9	3.9	—	—
C 36 4_377.9	377.9	0.34	0.60	0.36	0.80	2.9	3.3	3.0	3.5	2.9	3.9	—	—
C 36 4_420.2	420.2	0.33	0.59	0.35	0.79	2.9	3.3	3.0	3.5	2.9	3.9	—	—
C 36 4_458.4	458.4	0.33	0.59	0.35	0.79	2.9	3.3	3.0	3.5	2.9	3.9	—	—
C 36 4_517.2	517.2	0.33	0.59	0.35	0.79	2.9	3.3	3.0	3.5	2.9	3.9	—	—
C 36 4_574.7	574.7	0.33	0.59	0.35	0.79	2.9	3.3	3.0	3.5	2.9	3.9	—	—
C 36 4_665.9	665.9	0.33	0.59	0.35	0.79	2.9	3.3	3.0	3.5	2.9	3.9	—	—
C 36 4_754.2	754.2	0.33	0.59	0.35	0.79	2.9	3.3	3.0	3.5	2.9	3.9	—	—
C 36 4_848.5	848.5	0.33	0.59	0.35	0.79	2.9	3.3	3.0	3.5	2.9	3.9	—	—

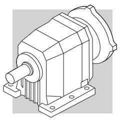

C 41

	i	**J** ($\cdot 10^{-4}$) [kgm^2]								
		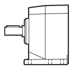	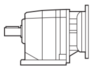 **IEC**							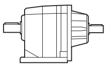
			63	**71**	**80**	**90**	**100**	**112**	**132**	
C 41 2_2.7	2.7	10	—	—	13	13	14	14	29	21
C 41 2_3.6	3.6	6.0	—	—	8.9	8.8	10	10	25	17
C 41 2_4.7	4.7	3.7	—	—	6.6	6.5	7.8	7.8	23	14
C 41 2_6.0	6.0	2.5	—	—	5.4	5.3	6.6	6.6	21	13
C 41 2_6.4	6.4	4.3	—	—	7.2	7.1	8.4	8.4	23	15
C 41 2_7.1	7.1	4.1	—	—	7.0	6.9	8.2	8.2	23	15
C 41 2_8.6	8.6	2.9	—	—	5.8	5.7	7.0	7.0	22	13
C 41 2_9.6	9.6	2.8	—	—	5.7	5.6	6.9	6.9	22	13
C 41 2_11.2	11.2	1.8	—	—	4.7	4.6	5.9	5.9	21	12
C 41 2_12.4	12.4	1.8	—	—	4.7	4.6	5.9	5.9	21	12
C 41 2_14.2	14.2	1.4	2.9	2.9	4.3	4.2	5.5	5.5	20	12
C 41 2_15.8	15.8	1.3	2.8	2.8	4.2	4.1	5.4	5.4	20	12
C 41 2_17.8	17.8	1.0	2.5	2.5	3.9	3.8	5.1	5.1	20	12
C 41 2_19.8	19.8	0.98	2.5	2.5	3.9	3.8	5.1	5.1	20	12
C 41 2_22.6	22.6	0.60	2.1	2.1	3.5	3.4	4.7	4.7	20	11
C 41 2_25.0	25.0	0.60	2.1	2.1	3.5	3.4	4.7	4.7	20	11
C 41 2_28.3	28.3	0.44	1.9	1.9	3.3	3.2	4.5	4.5	19	11
C 41 2_31.4	31.4	0.43	1.9	1.9	3.3	3.2	4.5	4.5	19	11
C 41 2_33.4	33.4	0.34	1.8	1.8	3.2	3.1	4.4	4.4	—	11
C 41 2_37.1	37.1	0.33	1.8	1.8	3.2	3.1	4.4	4.4	—	11
C 41 2_44.8	44.8	0.27	1.8	1.8	3.2	3.1	4.4	4.4	—	11
C 41 3_28.5	28.5	2.5	—	—	5.4	5.3	6.6	6.6	21	13
C 41 3_31.2	31.2	2.5	—	—	5.4	5.3	6.6	6.6	21	13
C 41 3_36.8	36.8	1.6	—	—	4.5	4.4	5.7	5.7	21	12
C 41 3_40.3	40.3	1.6	—	—	4.5	4.4	5.7	5.7	21	12
C 41 3_47.0	47.0	1.2	2.7	2.7	4.1	4.0	5.3	5.3	20	12
C 41 3_51.5	51.5	1.2	2.7	2.7	4.1	4.0	5.3	5.3	20	12
C 41 3_58.7	58.7	0.90	2.4	2.4	3.8	3.7	5.0	5.0	20	11
C 41 3_64.3	64.3	0.90	2.4	2.4	3.8	3.7	5.0	5.0	20	11
C 41 3_74.4	74.4	0.60	2.1	2.1	3.5	3.4	4.7	4.7	20	11
C 41 3_81.5	81.5	0.60	2.1	2.1	3.5	3.4	4.7	4.7	20	11
C 41 3_93.9	93.9	0.40	1.9	1.9	3.3	3.2	4.5	4.5	19	11
C 41 3_102.3	102.3	0.40	1.9	1.9	3.3	3.2	4.5	4.5	19	11
C 41 3_110.1	110.1	0.30	1.8	1.8	3.2	3.1	4.4	4.4	—	11
C 41 3_120.6	120.6	0.30	1.8	1.8	3.2	3.1	4.4	4.4	—	11
C 41 3_132.9	132.9	0.30	1.8	1.8	3.2	3.1	4.4	4.4	—	11
C 41 3_145.6	145.6	0.30	1.8	1.8	3.2	3.1	4.4	4.4	—	11
C 41 3_164.1	164.1	0.20	1.7	1.7	3.1	3.0	4.3	4.3	—	11
C 41 3_179.9	179.9	0.20	1.7	1.7	3.1	3.0	4.3	4.3	—	11
C 41 3_190.8	190.8	0.10	1.6	1.6	3.0	2.9	4.2	4.2	—	11
C 41 3_209.1	209.1	0.10	1.6	1.6	3.0	2.9	4.2	4.2	—	11
C 41 4_239.9	239.9	0.15	1.7	1.7	3.1	3.0	4.3	4.3	—	2.1
C 41 4_263.0	263.0	0.15	1.7	1.7	3.1	3.0	4.3	4.3	—	2.1
C 41 4_304.2	304.2	0.13	1.6	1.6	3.0	2.9	4.2	4.2	—	2.0
C 41 4_333.4	333.4	0.13	1.6	1.6	3.0	2.9	4.2	4.2	—	2.0
C 41 4_382.0	382.0	0.12	1.6	1.6	3.0	2.9	4.2	4.2	—	2.0
C 41 4_419.0	419.0	0.12	1.6	1.6	3.0	2.9	4.2	4.2	—	2.0
C 41 4_450.2	450.2	0.12	1.6	1.6	3.0	2.9	4.2	4.2	—	2.0
C 41 4_493.5	493.5	0.12	1.6	1.6	3.0	2.9	4.2	4.2	—	2.0
C 41 4_543.5	543.5	0.12	1.6	1.6	3.0	2.9	4.2	4.2	—	2.0
C 41 4_595.8	595.8	0.12	1.6	1.6	3.0	2.9	4.2	4.2	—	2.0
C 41 4_671.3	671.3	0.10	1.6	1.6	3.0	2.9	4.2	4.2	—	2.0
C 41 4_735.9	735.9	0.10	1.6	1.6	3.0	2.9	4.2	4.2	—	2.0
C 41 4_780.4	780.4	0.10	1.6	1.6	3.0	2.9	4.2	4.2	—	2.0
C 41 4_855.5	855.5	0.10	1.6	1.6	3.0	2.9	4.2	4.2	—	2.0

C 41

	i	**J** ($\cdot 10^{-4}$) [kgm^2]																	
		SERVO																	
		60A		**60B 80A**		**80B**		**95A**		**80C 95B 110A**		**95C 110B**		**130A**		**130B 180A**		**180B**	
		SK	**SC**	**SK**	**SC**	**SK**	**SC**	**SK**	**SC**	**SK**	**SC**	**SK**	**SC**	**SK**	**SC**	**SK**	**SC**	**SK**	**SC**
C 41 2_2.7	2.7	—	—	—	—	—	—	—	—	13	14	13	14	13	14	27	29	29	34
C 41 2_3.6	3.6	—	—	—	—	—	—	—	—	8.9	9.4	8.8	9.8	8.8	9.8	23	25	25	30
C 41 2_4.7	4.7	—	—	—	—	—	—	—	—	6.6	7.1	6.5	7.5	6.5	7.5	21	23	23	28
C 41 2_6.0	6.0	—	—	—	—	5.3	5.8	5.3	5.8	5.4	5.9	5.3	6.3	5.3	6.3	19	22	21	26
C 41 2_6.4	6.4	—	—	—	—	—	—	—	—	7.2	7.7	7.1	8.1	7.1	8.1	21	24	23	28
C 41 2_7.1	7.1	—	—	—	—	—	—	—	—	7.0	7.5	6.9	7.9	6.9	7.9	21	24	23	28
C 41 2_8.6	8.6	—	—	—	—	—	—	—	—	5.8	6.3	5.7	6.7	5.7	6.7	20	22	22	27
C 41 2_9.6	9.6	—	—	—	—	—	—	—	—	5.7	6.2	5.6	6.6	5.6	6.6	20	22	22	27
C 41 2_11.2	11.2	—	—	—	—	—	—	—	—	4.7	5.2	4.6	5.6	4.6	5.6	19	21	21	26
C 41 2_12.4	12.4	—	—	—	—	—	—	—	—	4.7	5.2	4.6	5.6	4.6	5.6	19	21	21	26
C 41 2_14.2	14.2	—	—	—	—	4.2	4.7	4.2	4.7	4.3	4.8	4.2	5.2	4.2	5.2	18	21	20	25
C 41 2_15.8	15.8	—	—	—	—	4.1	4.6	4.1	4.6	4.2	4.7	4.1	5.1	4.1	5.1	18	21	20	25
C 41 2_17.8	17.8	—	—	—	—	3.8	5.3	3.8	5.3	3.9	4.4	3.8	4.8	3.8	4.8	18	20	20	25
C 41 2_19.8	19.8	—	—	—	—	3.8	4.2	3.8	4.2	3.9	4.4	3.8	4.8	3.8	4.8	18	20	20	25
C 41 2_22.6	22.6	—	—	—	—	3.4	3.9	3.4	3.9	3.5	4.0	3.4	4.4	3.4	4.4	18	20	20	25
C 41 2_25.0	25.0	—	—	—	—	3.4	3.9	3.4	3.9	3.5	4.0	3.4	4.4	3.4	4.4	18	20	20	25
C 41 2_28.3	28.3	—	—	—	—	3.3	3.7	3.3	3.7	3.3	3.8	3.2	4.2	3.2	4.2	17	20	19	24
C 41 2_31.4	31.4	—	—	—	—	3.3	3.7	3.3	3.7	3.3	3.8	3.2	4.2	3.2	4.2	17	20	19	24
C 41 2_33.4	33.4	—	—	—	—	3.2	3.6	3.2	3.6	3.2	3.7	3.1	4.1	3.1	4.1	—	—	—	—
C 41 2_37.1	37.1	—	—	—	—	3.2	3.6	3.2	3.6	3.2	3.7	3.1	4.1	3.1	4.1	—	—	—	—
C 41 2_44.8	44.8	—	—	—	—	3.1	3.5	3.1	3.5	3.2	3.7	3.1	4.1	3.1	4.1	—	—	—	—
C 41 3_28.5	28.5	—	—	—	—	—	—	—	—	5.4	5.9	5.3	6.3	5.3	6.3	19	22	21	26
C 41 3_31.2	31.2	—	—	—	—	—	—	—	—	5.4	5.9	5.3	6.3	5.3	6.3	19	22	21	26
C 41 3_36.8	36.8	—	—	—	—	—	—	—	—	4.5	5.0	4.4	5.4	4.4	5.4	19	21	21	26
C 41 3_40.3	40.3	—	—	—	—	—	—	—	—	4.5	5.0	4.4	5.4	4.4	5.4	19	21	21	26
C 41 3_47.0	47.0	—	—	—	—	4.0	4.5	4.0	4.5	4.1	4.6	4.0	5.0	4.0	5.0	18	21	20	25
C 41 3_51.5	51.5	—	—	—	—	4.0	4.5	4.0	4.5	4.1	4.6	4.0	5.0	4.0	5.0	18	21	20	25
C 41 3_58.7	58.7	—	—	—	—	3.7	4.2	3.7	4.2	3.8	4.3	3.7	4.7	3.7	4.7	18	20	20	25
C 41 3_64.3	64.3	—	—	—	—	3.7	4.2	3.7	4.2	3.8	4.3	3.7	4.7	3.7	4.7	18	20	20	25
C 41 3_74.4	74.4	—	—	—	—	3.4	3.9	3.4	3.9	3.5	4.0	3.4	4.4	3.4	4.4	18	20	20	25
C 41 3_81.5	81.5	—	—	—	—	3.4	3.9	3.4	3.9	3.5	4.0	3.4	4.4	3.4	4.4	18	20	20	25
C 41 3_93.9	93.9	—	—	—	—	3.2	3.7	3.2	3.7	3.3	3.8	3.2	4.2	3.2	4.2	17	20	19	24
C 41 3_102.3	102.3	—	—	—	—	3.2	3.7	3.2	3.7	3.3	3.8	3.2	4.2	3.2	4.2	17	20	19	24
C 41 3_110.1	110.1	—	—	—	—	3.1	3.6	3.1	3.6	3.2	3.7	3.1	4.1	3.1	4.1	—	—	—	—
C 41 3_120.6	120.6	—	—	—	—	3.1	3.6	3.1	3.6	3.2	3.7	3.1	4.1	3.1	4.1	—	—	—	—
C 41 3_132.9	132.9	—	—	—	—	3.1	3.6	3.1	3.6	3.2	3.7	3.1	4.1	3.1	4.1	—	—	—	—
C 41 3_145.6	145.6	—	—	—	—	3.1	3.6	3.1	3.6	3.2	3.7	3.1	4.1	3.1	4.1	—	—	—	—
C 41 3_164.1	164.1	—	—	—	—	3.0	3.5	3.0	3.5	3.1	3.6	3.0	4.0	3.0	4.0	—	—	—	—
C 41 3_179.9	179.9	—	—	—	—	3.0	3.5	3.0	3.5	3.1	3.6	3.0	4.0	3.0	4.0	—	—	—	—
C 41 3_190.8	190.8	—	—	—	—	2.9	3.4	2.9	3.4	3.0	3.5	2.9	3.9	2.9	3.9	—	—	—	—
C 41 3_209.1	209.1	—	—	—	—	2.9	3.4	2.9	3.4	3.0	3.5	2.9	3.9	2.9	3.9	—	—	—	—
C 41 4_239.9	239.9	0.42	0.68	0.44	0.88	—	—	3.0	3.4	3.1	3.6	3.0	4.0	—	—	—	—	—	—
C 41 4_263.0	263.0	0.42	0.68	0.44	0.88	—	—	3.0	3.4	3.1	3.6	3.0	4.0	—	—	—	—	—	—
C 41 4_304.2	304.2	0.40	0.66	0.42	0.86	—	—	3.0	3.4	3.0	3.5	2.9	3.9	—	—	—	—	—	—
C 41 4_333.4	333.4	0.40	0.66	0.42	0.86	—	—	3.0	3.4	3.0	3.5	2.9	3.9	—	—	—	—	—	—
C 41 4_382.0	382.0	0.39	0.65	0.41	0.85	—	—	2.9	3.4	3.0	3.5	2.9	3.9	—	—	—	—	—	—
C 41 4_419.0	419.0	0.39	0.65	0.41	0.85	—	—	2.9	3.4	3.0	3.5	2.9	3.9	—	—	—	—	—	—
C 41 4_450.2	450.2	0.39	0.65	0.41	0.85	—	—	2.9	3.4	3.0	3.5	2.9	3.9	—	—	—	—	—	—
C 41 4_493.5	493.5	0.39	0.65	0.41	0.85	—	—	2.9	3.4	3.0	3.5	2.9	3.9	—	—	—	—	—	—
C 41 4_543.5	543.5	0.39	0.65	0.41	0.85	—	—	2.9	3.4	3.0	3.5	2.9	3.9	—	—	—	—	—	—
C 41 4_595.8	595.8	0.39	0.65	0.41	0.85	—	—	2.9	3.4	3.0	3.5	2.9	3.9	—	—	—	—	—	—
C 41 4_671.3	671.3	0.37	0.63	0.39	0.83	—	—	2.9	3.4	3.0	3.5	2.9	3.9	—	—	—	—	—	—
C 41 4_735.9	735.9	0.37	0.63	0.39	0.83	—	—	2.9	3.4	3.0	3.5	2.9	3.9	—	—	—	—	—	—
C 41 4_780.4	780.4	0.37	0.63	0.39	0.83	—	—	2.9	3.4	3.0	3.5	2.9	3.9	—	—	—	—	—	—
C 41 4_855.5	855.5	0.37	0.63	0.39	0.83	—	—	2.9	3.4	3.0	3.5	2.9	3.9	—	—	—	—	—	—

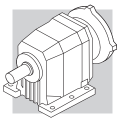

C 51

	i	J (•10^{-4}) [kgm^2]									
		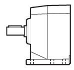	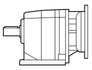 IEC								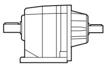
			63	71	80	90	100	112	132	160	180	
C 51 2_2.6	2.6	15	—	—	17	17	19	19	33	79	76	25
C 51 2_3.3	3.3	10	—	—	13	13	14	14	29	75	72	21
C 51 2_4.5	4.5	6.3	—	—	9.2	9.1	10	10	25	71	68	17
C 51 2_5.6	5.6	4.1	—	—	7.0	6.9	8.2	8.2	23	69	66	15
C 51 2_7.0	7.0	8.1	—	—	11	11	12	12	27	73	70	19
C 51 2_7.8	7.8	7.8	—	—	11	11	12	12	27	73	70	18
C 51 2_8.8	8.8	6.0	—	—	8.9	8.8	10	10	25	71	68	17
C 51 2_9.8	9.8	5.8	—	—	8.7	8.6	9.9	9.9	25	71	68	16
C 51 2_11.8	11.8	4.1	—	—	7.0	6.9	8.2	8.2	23	69	66	15
C 51 2_13.1	13.1	4.0	—	—	6.9	6.8	8.1	8.1	23	69	66	15
C 51 2_15.0	15.0	2.7	—	—	5.6	5.5	6.8	6.8	22	68	65	13
C 51 2_16.6	16.6	2.6	—	—	5.5	5.4	6.7	6.7	22	68	65	13
C 51 2_18.9	18.9	2.0	3.5	3.5	4.9	4.8	6.1	6.1	21	67	64	13
C 51 2_21.0	21.0	1.9	3.4	3.4	4.8	4.7	6.0	6.0	21	67	64	12
C 51 2_23.4	23.4	1.5	3.0	3.0	4.4	4.3	5.6	5.6	20	66	63	12
C 51 2_25.9	25.9	1.4	2.9	2.9	4.3	4.2	5.5	5.5	20	66	63	12
C 51 2_29.8	29.8	0.90	2.4	2.4	3.8	3.7	5.0	5.0	20	66	63	11
C 51 2_33.0	33.0	0.90	2.4	2.4	3.8	3.7	5.0	5.0	20	66	63	11
C 51 2_36.4	36.4	0.70	2.2	2.2	3.6	3.5	4.8	4.8	20	66	63	11
C 51 2_40.4	40.4	0.70	2.2	2.2	3.6	3.5	4.8	4.8	20	66	63	11
C 51 2_43.1	43.1	0.50	2.0	2.0	3.4	3.3	4.6	4.6	—	—	—	11
C 51 2_47.8	47.8	0.50	2.0	2.0	3.4	3.3	4.6	4.6	—	—	—	11
C 51 2_51.4	51.4	0.40	1.9	1.9	3.3	3.2	4.5	4.5	—	—	—	11
C 51 2_57.0	57.0	0.40	1.9	1.9	3.3	3.2	4.5	4.5	—	—	—	11
C 51 3_21.8	21.8	6.8	—	—	9.7	9.6	11	11	26	72	69	17
C 51 3_23.9	23.9	6.8	—	—	9.7	9.6	11	11	26	72	69	17
C 51 3_27.4	27.4	5.2	—	—	8.1	8.0	9.3	9.3	24	70	67	16
C 51 3_30.1	30.1	5.2	—	—	8.1	8.0	9.3	9.3	24	70	67	16
C 51 3_37.0	37.0	3.6	—	—	6.5	6.4	7.7	7.7	23	69	66	14
C 51 3_40.5	40.5	3.6	—	—	6.5	6.4	7.7	7.7	23	69	66	14
C 51 3_46.7	46.7	2.4	—	—	5.3	5.2	6.5	6.5	21	67	64	13
C 51 3_51.2	51.2	2.4	—	—	5.3	5.2	6.5	6.5	21	67	64	13
C 51 3_59.0	59.0	1.8	3.3	3.3	4.7	4.6	5.9	5.9	21	67	64	12
C 51 3_64.6	64.6	1.8	3.3	3.3	4.7	4.6	5.9	5.9	21	67	64	12
C 51 3_72.9	72.9	1.3	2.8	2.8	4.2	4.1	5.4	5.4	20	66	63	12
C 51 3_79.9	79.9	1.3	2.8	2.8	4.2	4.1	5.4	5.4	20	66	63	12
C 51 3_93.0	93.0	0.80	2.3	2.3	3.7	3.6	4.9	4.9	20	66	63	11
C 51 3_101.8	101.8	0.80	2.3	2.3	3.7	3.6	4.9	4.9	20	66	63	11
C 51 3_113.6	113.6	0.60	2.1	2.1	3.5	3.4	4.7	4.7	20	66	63	11
C 51 3_124.4	124.4	0.60	2.1	2.1	3.5	3.4	4.7	4.7	20	66	63	11
C 51 3_134.6	134.6	0.50	2.0	2.0	3.4	3.3	4.6	4.6	—	—	—	11
C 51 3_147.4	147.4	0.50	2.0	2.0	3.4	3.3	4.6	4.6	—	—	—	11
C 51 3_160.5	160.5	0.40	1.9	1.9	3.3	3.2	4.5	4.5	—	—	—	11
C 51 3_175.8	175.8	0.40	1.9	1.9	3.3	3.2	4.5	4.5	—	—	—	11
C 51 3_197.9	197.9	0.30	1.8	1.8	3.2	3.1	4.4	4.4	—	—	—	11
C 51 3_216.7	216.7	0.30	1.8	1.8	3.2	3.1	4.4	4.4	—	—	—	11
C 51 4_240.9	240.9	0.30	1.8	1.8	3.2	3.1	4.4	4.4	—	—	—	1.2
C 51 4_263.8	263.8	0.30	1.8	1.8	3.2	3.1	4.4	4.4	—	—	—	1.2
C 51 4_297.8	297.8	0.30	1.8	1.8	3.2	3.1	4.4	4.4	—	—	—	1.2
C 51 4_326.1	326.1	0.30	1.8	1.8	3.2	3.1	4.4	4.4	—	—	—	1.2
C 51 4_380.0	380.0	0.20	1.7	1.7	3.1	3.0	4.3	4.3	—	—	—	1.1
C 51 4_416.0	416.0	0.20	1.7	1.7	3.1	3.0	4.3	4.3	—	—	—	1.1
C 51 4_463.9	463.9	0.20	1.7	1.7	3.1	3.0	4.3	4.3	—	—	—	1.1
C 51 4_508.0	508.0	0.20	1.7	1.7	3.1	3.0	4.3	4.3	—	—	—	1.1
C 51 4_549.7	549.7	0.20	1.7	1.7	3.1	3.0	4.3	4.3	—	—	—	1.1
C 51 4_602.0	602.0	0.20	1.7	1.7	3.1	3.0	4.3	4.3	—	—	—	1.1
C 51 4_655.4	655.4	0.20	1.7	1.7	3.1	3.0	4.3	4.3	—	—	—	1.1
C 51 4_717.7	717.7	0.20	1.7	1.7	3.1	3.0	4.3	4.3	—	—	—	1.1
C 51 4_808.0	808.0	0.20	1.7	1.7	3.1	3.0	4.3	4.3	—	—	—	1.1
C 51 4_884.9	884.9	0.20	1.7	1.7	3.1	3.0	4.3	4.3	—	—	—	1.1

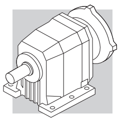

C 51

	i	**J** ($\cdot 10^{-4}$) [kgm^2]											
		SERVO											
		80B		**95A**		**80C** **95B** **110A**		**95C** **110B** **130A**		**130B** **180A**		**180B**	
		SK	**SC**	**SK**	**SC**	**SK**	**SC**	**SK**	**SC**	**SK**	**SC**	**SK**	**SC**
C 51 2_2.6	2.6	—	—	—	—	17	18	17	18	32	34	33	38
C 51 2_3.3	3.3	—	—	—	—	13	14	13	14	27	29	29	34
C 51 2_4.5	4.5	—	—	—	—	9.2	9.7	9.1	10	23	26	25	30
C 51 2_5.6	5.6	—	—	—	—	7.0	7.5	6.9	7.9	21	24	23	28
C 51 2_7.0	7.0	—	—	—	—	11	12	11	12	25	28	27	32
C 51 2_7.8	7.8	—	—	—	—	11	12	11	12	25	27	27	32
C 51 2_8.8	8.8	—	—	—	—	8.9	9.4	8.8	9.8	23	25	25	30
C 51 2_9.8	9.8	—	—	—	—	8.7	9.2	8.6	9.6	23	25	25	30
C 51 2_11.8	11.8	—	—	—	—	7.0	7.5	6.9	7.9	21	24	23	28
C 51 2_13.1	13.1	—	—	—	—	6.9	7.4	6.8	7.8	21	23	23	28
C 51 2_15.0	15.0	—	—	—	—	5.6	6.1	5.5	6.5	20	22	22	27
C 51 2_16.6	16.6	—	—	—	—	5.5	6.0	5.4	6.4	20	22	22	27
C 51 2_18.9	18.9	4.8	5.3	4.8	5.3	4.9	5.4	4.8	5.8	19	21	21	26
C 51 2_21.0	21.0	4.7	5.2	4.7	5.2	4.8	5.3	4.7	5.7	19	21	21	26
C 51 2_23.4	23.4	4.3	4.8	4.3	4.8	4.4	4.3	4.3	5.3	18	21	20	25
C 51 2_25.9	25.9	4.2	4.7	4.2	4.7	4.3	4.8	4.2	5.2	18	21	20	25
C 51 2_29.8	29.8	3.7	4.2	3.7	4.2	3.8	4.3	3.7	4.7	18	20	20	25
C 51 2_33.0	33.0	3.7	4.2	3.7	4.2	3.8	4.3	3.7	4.7	18	20	20	25
C 51 2_36.4	36.4	3.5	4.0	3.5	4.0	3.6	4.1	3.5	4.5	18	20	20	25
C 51 2_40.4	40.4	3.5	4.0	3.5	4.0	3.6	4.1	3.5	4.5	18	20	20	25
C 51 2_43.1	43.1	3.3	3.8	3.3	3.8	3.4	3.9	3.3	4.3	—	—	—	—
C 51 2_47.8	47.8	3.3	3.8	3.3	3.8	3.4	3.9	3.3	4.3	—	—	—	—
C 51 2_51.4	51.4	3.2	3.7	3.2	3.7	3.3	3.8	3.2	4.2	—	—	—	—
C 51 2_57.0	57.0	3.2	3.7	3.2	3.7	3.3	3.8	3.2	4.2	—	—	—	—
C 51 3_21.8	21.8	—	—	—	—	9.7	10	9.6	11	24	26	26	31
C 51 3_23.9	23.9	—	—	—	—	9.7	10	9.6	11	24	26	26	31
C 51 3_27.4	27.4	—	—	—	—	8.1	8.6	8.0	9.0	22	25	24	29
C 51 3_30.1	30.1	—	—	—	—	8.1	8.6	8.0	9.0	22	25	24	29
C 51 3_37.0	37.0	—	—	—	—	6.5	7.0	6.4	7.4	21	23	23	28
C 51 3_40.5	40.5	—	—	—	—	6.5	7.0	6.4	7.4	21	23	23	28
C 51 3_46.7	46.7	—	—	—	—	5.3	5.8	5.2	6.2	19	22	21	26
C 51 3_51.2	51.2	—	—	—	—	5.3	5.8	5.2	6.2	19	22	21	26
C 51 3_59.0	59.0	4.6	5.1	4.6	5.1	4.7	5.2	4.6	5.6	19	21	21	26
C 51 3_64.6	64.6	4.6	5.1	4.6	5.1	4.7	5.2	4.6	5.6	19	21	21	26
C 51 3_72.9	72.9	4.1	4.6	4.1	4.6	4.2	5.2	4.1	5.1	18	21	20	25
C 51 3_79.9	79.9	4.1	4.6	4.1	4.6	4.2	5.2	4.1	5.1	18	21	20	25
C 51 3_93.0	93.0	3.6	4.1	3.6	4.1	3.7	4.2	3.6	4.6	18	20	20	25
C 51 3_101.8	101.8	3.6	4.1	3.6	4.1	3.7	4.2	3.6	4.6	18	20	20	25
C 51 3_113.6	113.6	3.4	3.9	3.4	3.9	3.5	4.0	3.4	4.4	18	20	20	25
C 51 3_124.4	124.4	3.4	3.9	3.4	3.9	3.5	4.0	3.4	4.4	18	20	20	25
C 51 3_134.6	134.6	3.3	3.8	3.3	3.8	3.4	3.9	3.3	4.3	—	—	—	—
C 51 3_147.4	147.4	3.3	3.8	3.3	3.8	3.4	3.9	3.3	4.3	—	—	—	—
C 51 3_160.5	160.5	3.2	3.7	3.2	3.7	3.3	3.8	3.2	4.2	—	—	—	—
C 51 3_175.8	175.8	3.2	3.7	3.2	3.7	3.3	3.8	3.2	4.2	—	—	—	—
C 51 3_197.9	197.9	3.1	3.6	3.1	3.6	3.2	3.7	3.1	4.1	—	—	—	—
C 51 3_216.7	216.7	3.1	3.6	3.1	3.6	3.2	3.7	3.1	4.1	—	—	—	—
C 51 4_240.9	240.9	—	—	3.1	3.6	3.2	3.7	3.1	4.1	—	—	—	—
C 51 4_263.8	263.8	—	—	3.1	3.6	3.2	3.7	3.1	4.1	—	—	—	—
C 51 4_297.8	297.8	—	—	3.1	3.6	3.2	3.7	3.1	4.1	—	—	—	—
C 51 4_326.1	326.1	—	—	3.1	3.6	3.2	3.7	3.1	4.1	—	—	—	—
C 51 4_380.0	380.0	—	—	3.0	3.5	3.1	3.6	3.0	4.0	—	—	—	—
C 51 4_416.0	416.0	—	—	3.0	3.5	3.1	3.6	3.0	4.0	—	—	—	—
C 51 4_463.9	463.9	—	—	3.0	3.5	3.1	3.6	3.0	4.0	—	—	—	—
C 51 4_508.0	508.0	—	—	3.0	3.5	3.1	3.6	3.0	4.0	—	—	—	—
C 51 4_549.7	549.7	—	—	3.0	3.5	3.1	3.6	3.0	4.0	—	—	—	—
C 51 4_602.0	602.0	—	—	3.0	3.5	3.1	3.6	3.0	4.0	—	—	—	—
C 51 4_655.4	655.4	—	—	3.0	3.5	3.1	3.6	3.0	4.0	—	—	—	—
C 51 4_717.7	717.7	—	—	3.0	3.5	3.1	3.6	3.0	4.0	—	—	—	—
C 51 4_808.0	808.0	—	—	3.0	3.5	3.1	3.6	3.0	4.0	—	—	—	—
C 51 4_884.9	884.9	—	—	3.0	3.5	3.1	3.6	3.0	4.0	—	—	—	—

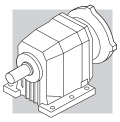

C 61

	i	**J** (•10^{-4}) [kgm^2]									
		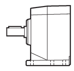	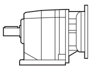 **IEC**								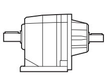
			63	**71**	**80**	**90**	**100**	**112**	**132**	**160**	**180**	
C 61 2_2.8	2.8	30	—	—	—	—	—	—	49	78	76	52
C 61 2_3.7	3.7	19	—	—	22	22	23	23	38	78	76	41
C 61 2_4.6	4.6	14	—	—	17	17	18	18	33	78	76	36
C 61 2_6.0	6.0	8.8	—	—	12	12	13	13	28	78	76	31
C 61 2_6.7	6.7	14	—	—	—	—	—	—	33	78	76	36
C 61 2_7.5	7.5	13	—	—	—	—	—	—	32	78	76	35
C 61 2_8.8	8.8	13	—	—	16	16	17	17	32	78	76	35
C 61 2_9.8	9.8	12	—	—	15	15	16	16	31	78	76	34
C 61 2_10.9	10.9	9.6	—	—	13	12	14	14	29	78	76	31
C 61 2_12.1	12.1	9.2	—	—	12	12	13	13	28	78	76	31
C 61 2_14.3	14.3	5.8	—	—	8.7	8.6	9.9	9.9	25	78	76	28
C 61 2_15.9	15.9	5.6	—	—	8.5	8.4	9.7	9.7	25	78	76	27
C 61 2_17.7	17.7	4.4	—	—	7.3	7.2	8.5	8.5	23	78	76	26
C 61 2_19.6	19.6	4.3	—	—	7.2	7.1	8.4	8.4	23	78	76	26
C 61 2_22.4	22.4	3.2	4.7	4.7	6.1	6.0	7.3	7.3	22	78	76	25
C 61 2_24.8	24.8	3.1	4.6	4.6	6.0	5.9	7.2	7.2	22	78	76	25
C 61 2_27.4	27.4	2.1	3.6	3.6	5.0	4.9	6.2	6.2	21	78	76	24
C 61 2_30.4	30.4	2.2	3.7	3.7	5.1	5.0	6.3	6.3	21	78	76	24
C 61 2_34.2	34.2	1.5	3.0	3.0	4.4	4.3	5.6	5.6	20	78	76	23
C 61 2_38.0	38.0	1.5	3.0	3.0	4.4	4.3	5.6	5.6	20	78	76	23
C 61 3_26.8	26.8	10	—	—	13	13	14	14	29	78	76	32
C 61 3_29.4	29.4	10	—	—	13	13	14	14	29	78	76	32
C 61 3_33.0	33.0	8.1	—	—	11	11	12	12	27	78	76	30
C 61 3_36.1	36.1	8.1	—	—	11	11	12	12	27	78	76	30
C 61 3_43.4	43.4	5.0	—	—	7.9	7.8	9.1	9.1	24	78	76	27
C 61 3_47.6	47.6	5.0	—	—	7.9	7.8	9.1	9.1	24	78	76	27
C 61 3_53.5	53.5	3.9	—	—	6.8	6.7	8.0	8.0	23	78	76	26
C 61 3_58.6	58.6	3.8	—	—	6.7	6.6	7.9	7.9	23	78	76	26
C 61 3_67.7	67.7	2.8	4.3	4.3	5.7	5.6	6.9	6.9	22	78	76	25
C 61 3_74.2	74.2	2.8	4.3	4.3	5.7	5.6	6.9	6.9	22	78	76	25
C 61 3_83.0	83.0	1.9	3.4	3.4	4.8	4.7	6.0	6.0	21	78	76	24
C 61 3_91.0	91.0	1.9	3.4	3.4	4.8	4.7	6.0	6.0	21	78	76	24
C 61 3_103.6	103.6	1.3	2.8	2.8	4.2	4.1	5.4	5.4	20	78	76	23
C 61 3_113.6	113.6	1.3	2.8	2.8	4.2	4.1	5.4	5.4	20	78	76	23
C 61 3_128.1	128.1	1.0	2.5	2.5	3.9	3.8	5.1	5.1	20	78	76	23
C 61 3_140.5	140.5	1.0	2.5	2.5	3.9	3.8	5.1	5.1	20	78	76	23
C 61 3_150.0	150.0	0.70	2.2	2.2	3.6	3.5	4.8	4.8	—	—	—	23
C 61 3_164.5	164.5	0.70	2.2	2.2	3.6	3.5	4.8	4.8	—	—	—	23
C 61 3_178.6	178.6	0.60	2.1	2.1	3.5	3.4	4.7	4.7	—	—	—	22
C 61 3_195.8	195.8	0.60	2.1	2.1	3.5	3.4	4.7	4.7	—	—	—	22
C 61 4_217.4	217.4	0.67	2.2	2.2	3.6	3.5	4.8	4.8	—	—	—	11
C 61 4_238.3	238.3	0.67	2.2	2.2	3.6	3.5	4.8	4.8	—	—	—	11
C 61 4_275.3	275.3	0.81	2.3	2.3	3.7	3.6	4.9	4.9	—	—	—	11
C 61 4_301.7	301.7	0.81	2.3	2.3	3.7	3.6	4.9	4.9	—	—	—	11
C 61 4_337.7	337.7	0.56	2.1	2.1	3.5	3.4	4.7	4.7	—	—	—	11
C 61 4_370.1	370.1	0.56	2.1	2.1	3.5	3.4	4.7	4.7	—	—	—	11
C 61 4_421.5	421.5	0.53	2.0	2.0	3.4	3.3	4.6	4.6	—	—	—	11
C 61 4_462.0	462.0	0.53	2.0	2.0	3.4	3.3	4.6	4.6	—	—	—	11
C 61 4_521.1	521.1	0.51	2.0	2.0	3.4	3.3	4.6	4.6	—	—	—	11
C 61 4_571.2	571.2	0.51	2.0	2.0	3.4	3.3	4.6	4.6	—	—	—	11
C 61 4_610.1	610.1	0.49	2.0	2.0	3.4	3.3	4.6	4.6	—	—	—	11
C 61 4_668.8	668.8	0.49	2.0	2.0	3.4	3.3	4.6	4.6	—	—	—	11
C 61 4_726.3	726.3	0.48	2.0	2.0	3.4	3.3	4.6	4.6	—	—	—	11
C 61 4_796.1	796.1	0.48	2.0	2.0	3.4	3.3	4.6	4.6	—	—	—	11

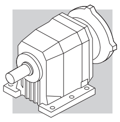

C 61

	i	J (•10⁻⁴) [kgm²]											
		SERVO											
		80B		95A		80C 95B 110A		95C 110B 130A		130B 180A		180B	
		SK	SC	SK	SC	SK	SC	SK	SC	SK	SC	SK	SC
C 61 2_2.8	2.8	—	—	—	—	—	—	—	—	47	49	49	54
C 61 2_3.7	3.7	—	—	—	—	22	23	22	23	36	38	38	43
C 61 2_4.6	4.6	—	—	—	—	17	18	17	18	31	33	33	38
C 61 2_6.0	6.0	—	—	—	—	12	13	12	13	26	28	28	33
C 61 2_6.7	6.7	—	—	—	—	—	—	—	—	31	33	33	38
C 61 2_7.5	7.5	—	—	—	—	—	—	—	—	30	32	32	37
C 61 2_8.8	8.8	—	—	—	—	16	17	16	17	30	32	32	37
C 61 2_9.8	9.8	—	—	—	—	15	16	15	16	23	31	31	36
C 61 2_10.9	10.9	—	—	—	—	13	14	12	13	27	29	29	34
C 61 2_12.1	12.1	—	—	—	—	12	13	12	13	26	29	28	33
C 61 2_14.3	14.3	—	—	—	—	8.7	9.2	8.6	9.6	23	25	25	30
C 61 2_15.9	15.9	—	—	—	—	8.5	9.0	8.4	9.4	23	25	25	30
C 61 2_17.7	17.7	—	—	—	—	7.3	7.8	7.2	8.2	21	24	23	28
C 61 2_19.6	19.6	—	—	—	—	7.2	7.7	7.1	8.1	21	24	23	28
C 61 2_22.4	22.4	—	—	6.0	6.5	6.1	6.6	6.0	7.0	20	23	22	27
C 61 2_24.8	24.8	—	—	5.9	6.4	6.0	6.5	5.9	6.9	20	23	22	27
C 61 2_27.4	27.4	—	—	4.9	5.4	5.0	5.5	4.9	5.9	19	22	21	26
C 61 2_30.4	30.4	—	—	5.0	5.5	5.1	5.6	5.0	6.0	19	22	21	26
C 61 2_34.2	34.2	—	—	4.3	4.8	4.4	4.9	4.3	5.3	18	21	20	25
C 61 2_38.0	38.0	—	—	4.3	4.8	4.4	4.9	4.3	5.3	18	21	20	25
C 61 3_26.8	26.8	—	—	—	—	13	14	13	14	27	29	29	34
C 61 3_29.4	29.4	—	—	—	—	13	14	13	14	27	29	29	34
C 61 3_33.0	33.0	—	—	—	—	11	12	11	12	25	28	27	32
C 61 3_36.1	36.1	—	—	—	—	11	12	11	12	25	28	27	32
C 61 3_43.4	43.4	—	—	—	—	7.9	8.4	7.8	8.8	22	24	24	29
C 61 3_47.6	47.6	—	—	—	—	7.9	8.4	7.8	8.8	22	24	24	29
C 61 3_53.5	53.5	—	—	—	—	6.8	7.3	6.7	7.7	21	23	23	28
C 61 3_58.6	58.6	—	—	—	—	6.7	7.2	6.6	7.6	21	23	23	28
C 61 3_67.7	67.7	—	—	5.6	6.1	5.7	6.2	5.6	6.6	20	22	22	27
C 61 3_74.2	74.2	—	—	5.6	6.1	5.7	6.2	5.6	6.6	20	22	22	27
C 61 3_83.0	83.0	—	—	4.7	5.2	4.8	5.3	4.7	5.7	19	21	21	26
C 61 3_91.0	91.0	—	—	4.7	5.2	4.8	5.3	4.7	5.7	19	21	21	26
C 61 3_103.6	103.6	—	—	4.1	4.6	4.2	4.7	4.1	5.1	18	21	20	25
C 61 3_113.6	113.6	—	—	4.1	4.6	4.2	4.7	4.1	5.1	18	21	20	25
C 61 3_128.1	128.1	—	—	3.8	4.3	3.9	4.4	3.8	4.8	18	20	20	25
C 61 3_140.5	140.5	—	—	3.8	4.3	3.9	4.4	3.8	4.8	18	20	20	25
C 61 3_150.0	150.0	—	—	3.5	4.0	3.6	4.1	3.5	4.5	—	—	—	—
C 61 3_164.5	164.5	—	—	3.5	4.0	3.6	4.1	3.5	4.5	—	—	—	—
C 61 3_178.6	178.6	—	—	3.4	3.9	3.5	4.0	3.4	4.4	—	—	—	—
C 61 3_195.8	195.8	—	—	3.4	3.9	3.5	4.0	3.4	4.4	—	—	—	—
C 61 4_217.4	217.4	3.5	3.9	3.5	3.9	3.6	4.1	3.5	4.5	—	—	—	—
C 61 4_238.3	238.3	3.5	3.9	3.5	3.9	3.6	4.1	3.5	4.5	—	—	—	—
C 61 4_275.3	275.3	3.6	4.1	3.6	4.1	3.7	4.2	3.6	4.6	—	—	—	—
C 61 4_301.7	301.7	3.6	4.1	3.6	4.1	3.7	4.2	3.6	4.6	—	—	—	—
C 61 4_337.7	337.7	3.4	3.8	3.4	3.8	3.5	4.0	3.4	4.4	—	—	—	—
C 61 4_370.1	370.1	3.4	3.8	3.4	3.8	3.5	4.0	3.4	4.4	—	—	—	—
C 61 4_421.5	421.5	3.4	3.8	3.4	3.8	3.4	3.9	3.3	4.3	—	—	—	—
C 61 4_462.0	462.0	3.4	3.8	3.4	3.8	3.4	3.9	3.3	4.3	—	—	—	—
C 61 4_521.1	521.1	3.3	3.8	3.3	3.8	3.4	3.9	3.3	4.3	—	—	—	—
C 61 4_571.2	571.2	3.3	3.8	3.3	3.8	3.4	3.9	3.3	4.3	—	—	—	—
C 61 4_610.1	610.1	3.3	3.7	3.3	3.7	3.4	3.9	3.3	4.3	—	—	—	—
C 61 4_668.8	668.8	3.3	3.7	3.3	3.7	3.4	3.9	3.3	4.3	—	—	—	—
C 61 4_726.3	726.3	3.3	3.7	3.3	3.7	3.4	3.9	3.3	4.3	—	—	—	—
C 61 4_796.1	796.1	3.3	3.7	3.3	3.7	3.4	3.9	3.3	4.3	—	—	—	—

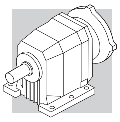

C 70

	i	**J** (•10^{-4}) [kgm^2]													
		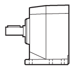	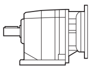 **IEC**												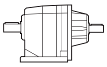
			63	**71**	**80**	**90**	**100 112**	**132**	**160**	**180**	**200**	**225**	**250**	**280**	
C 70 2_4.6	4.6	—	—	—	—	—	—	—	136	133	143	—	—	—	99
C 70 2_5.9	5.9	—	—	—	—	—	—	—	119	117	126	—	—	—	32
C 70 2_6.3	6.3	—	—	—	—	—	—	—	129	127	136	—	—	—	93
C 70 2_7.5	7.5	26	—	—	—	—	—	45	105	102	112	—	—	—	68
C 70 2_8.0	8.0	—	—	—	—	—	—	—	115	113	122	—	—	—	78
C 70 2_9.5	9.5	19	—	—	—	—	—	38	97	95	—	—	—	—	60
C 70 2_10.2	10.2	24	—	—	—	—	—	43	102	100	109	—	—	—	65
C 70 2_11.2	11.2	15	—	—	—	—	—	34	94	91	—	—	—	—	56
C 70 2_13.0	13.0	17	—	—	—	—	—	36	95	93	—	—	—	—	58
C 70 2_14.1	14.1	9.9	—	—	12	12	14	29	88	86	—	—	—	—	51
C 70 2_15.3	15.3	14	—	—	—	—	—	33	93	90	—	—	—	—	55
C 70 2_16.7	16.7	6.9	—	—	9.5	9.4	11	26	85	83	—	—	—	—	48
C 70 2_19.3	19.3	9.1	—	—	12	12	13	28	87	85	—	—	—	—	50
C 70 2_22.9	22.9	6.4	—	—	9.0	8.9	10	25	85	83	—	—	—	—	48
C 70 2_27.7	27.7	5.2	—	—	8.0	7.9	9.2	24	84	81	—	—	—	—	46
C 70 2_34.7	34.7	3.2	—	—	6.1	6.0	7.3	22	82	79	—	—	—	—	44
C 70 3_41.3	41.3	4.4	—	—	7.2	7.2	8.5	23	83	80	—	—	—	—	46
C 70 3_44.7	44.7	4.2	—	—	7.0	7.0	8.2	23	83	80	—	—	—	—	45
C 70 3_52.2	52.2	3.0	—	—	5.8	5.8	7.0	22	81	79	—	—	—	—	44
C 70 3_56.5	56.5	2.8	—	—	5.7	5.6	6.9	22	81	79	—	—	—	—	44
C 70 3_65.9	65.9	2.0	—	—	4.9	4.8	6.1	21	80	78	—	—	—	—	43
C 70 3_71.3	71.3	2.0	—	—	4.8	4.8	6.0	21	80	78	—	—	—	—	43
C 70 3_81.4	81.4	1.5	—	—	4.3	4.3	5.6	20	80	78	—	—	—	—	43
C 70 3_88.2	88.2	1.4	—	—	4.3	4.2	5.5	20	80	76	—	—	—	—	43
C 70 3_103.8	103.8	1.0	—	—	3.8	3.8	5.1	20	79	77	—	—	—	—	42
C 70 3_112.4	112.4	0.90	—	—	3.8	3.7	5.0	20	79	77	—	—	—	—	42
C 70 3_126.8	126.8	0.70	—	—	3.5	3.5	4.8	20	79	77	—	—	—	—	42
C 70 3_137.4	137.4	0.70	—	—	3.5	3.5	4.7	20	79	77	—	—	—	—	42
C 70 3_150.3	150.3	0.50	—	—	3.4	3.4	9.6	—	—	—	—	—	—	—	42
C 70 3_162.8	162.8	0.50	—	—	3.4	3.4	4.6	—	—	—	—	—	—	—	42
C 70 3_179.2	179.2	0.40	—	—	3.2	3.3	4.5	—	—	—	—	—	—	—	42
C 70 3_194.1	194.1	0.40	—	—	3.2	3.2	4.5	—	—	—	—	—	—	—	42
C 70 3_220.9	220.9	0.30	—	—	3.1	3.1	4.3	—	—	—	—	—	—	—	41
C 70 3_239.3	239.3	0.30	—	—	3.1	3.1	4.3	—	—	—	—	—	—	—	41
C 70 4_251.3	251.3	0.70	2.2	2.2	3.5	3.5	4.8	20	—	—	—	—	—	—	11
C 70 4_272.2	272.2	0.70	2.2	2.1	3.5	3.5	4.8	20	—	—	—	—	—	—	11
C 70 4_317.9	317.9	0.50	2.0	2.0	3.4	3.3	4.6	19	—	—	—	—	—	—	11
C 70 4_344.3	344.3	0.50	2.0	2.0	3.4	3.3	4.6	19	—	—	—	—	—	—	11
C 70 4_409.4	409.4	0.40	1.8	1.8	3.2	3.2	4.5	19	—	—	—	—	—	—	7.9
C 70 4_443.5	443.5	0.40	1.8	1.8	3.2	3.2	4.5	19	—	—	—	—	—	—	7.9
C 70 4_512.0	512.0	0.30	1.7	1.7	3.1	3.1	4.4	19	—	—	—	—	—	—	7.8
C 70 4_554.7	554.7	0.30	1.7	1.7	3.1	3.1	4.4	19	—	—	—	—	—	—	7.8
C 70 4_606.8	606.8	0.20	1.7	1.7	3.1	3.0	4.3	—	—	—	—	—	—	—	7.8
C 70 4_657.3	657.3	0.20	1.7	1.7	3.1	3.0	4.3	—	—	—	—	—	—	—	7.7
C 70 4_736.0	736.0	0.20	1.6	1.6	3.0	2.9	4.3	—	—	—	—	—	—	—	7.7
C 70 4_797.3	797.3	0.20	1.6	1.6	3.0	2.9	4.3	—	—	—	—	—	—	—	7.7
C 70 4_922.6	922.6	0.10	1.6	1.6	3.0	2.9	4.2	—	—	—	—	—	—	—	7.7
C 70 4_999.5	999.5	0.10	1.6	1.6	3.0	2.9	4.2	—	—	—	—	—	—	—	7.6
C 70 4_1069	1069	0.80	1.6	1.5	2.9	2.9	4.2	—	—	—	—	—	—	—	7.6
C 70 4_1158	1158	0.80	1.6	1.5	2.9	2.9	4.2	—	—	—	—	—	—	—	7.6
C 70 4_1362	1362	0.60	1.5	1.5	2.9	2.9	4.1	—	—	—	—	—	—	—	7.6
C 70 4_1476	1476	0.60	1.5	1.5	2.9	2.9	4.1	—	—	—	—	—	—	—	7.6

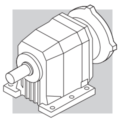

C 80

		J (•10⁻⁴) [kgm²]													
	i		IEC												
			63	71	80	90	100 112	132	160	180	200	225	250	280	
C 80 2_5.6	5.6	—	—	—	—	—	—	—	—	197	211	489	—	—	164
C 80 2_6.1	6.1	—	—	—	—	—	—	—	—	193	210	485	—	—	159
C 80 2_7.0	7.0	—	—	—	—	—	—	—	160	161	174	452	—	—	127
C 80 2_7.6	7.6	—	—	—	—	—	—	—	158	158	172	449	—	—	124
C 80 2_8.9	8.9	—	—	—	—	—	—	—	137	135	146	429	—	—	101
C 80 2_9.6	9.6	—	—	—	—	—	—	—	136	133	144	427	—	—	99
C 80 2_11.1	11.1	38	—	—	—	—	—	56	116	113	124	408	—	—	79
C 80 2_12.0	12.0	36	—	—	—	—	—	55	115	112	123	407	—	—	78
C 80 2_13.8	13.8	28	—	—	—	—	—	47	106	104	135	398	—	—	69
C 80 2_14.9	14.9	27	—	—	—	—	—	46	106	103	134	397	—	—	69
C 80 2_16.7	16.7	21	—	—	—	—	—	40	100	97	127	391	—	—	63
C 80 2_18.1	18.1	21	—	—	—	—	—	40	99	97	127	390	—	—	62
C 80 2_20.5	20.5	14	—	—	17	17	18	33	93	90	120	383	—	—	55
C 80 2_22.2	22.2	14	—	—	16	16	18	33	92	90	120	383	—	—	55
C 80 2_24.0	24.0	13	—	—	16	16	17	32	91	89	119	382	—	—	54
C 80 2_25.9	25.9	13	—	—	16	15	17	32	91	89	118	382	—	—	54
C 80 2_31.3	31.3	8.7	—	—	12	11	13	28	87	85	—	—	—	—	50
C 80 2_39.1	39.1	5.2	—	—	8.0	8.0	9.2	24	84	81	—	—	—	—	46
C 80 3_43.5	43.5	9.6	—	—	12	12	14	29	88	86	—	—	—	—	51
C 80 3_47.4	47.4	9.1	—	—	12	12	13	28	87	85	—	—	—	—	50
C 80 3_57.3	57.3	5.7	—	—	8.5	8.5	9.7	25	84	82	—	—	—	—	47
C 80 3_62.5	62.5	5.4	—	—	8.2	8.2	9.5	24	84	82	—	—	—	—	47
C 80 3_70.5	70.5	4.3	—	—	7.1	7.0	8.3	23	83	80	—	—	—	—	45
C 80 3_76.9	76.9	4.1	—	—	7.0	6.9	8.2	23	82	80	—	—	—	—	45
C 80 3_89.3	89.3	3.0	—	—	5.9	5.8	7.1	22	81	79	—	—	—	—	44
C 80 3_97.4	97.4	2.9	—	—	5.8	5.7	7.0	22	81	79	—	—	—	—	44
C 80 3_109.5	109.5	2.0	—	—	4.8	4.8	6.1	21	80	78	—	—	—	—	43
C 80 3_119.5	119.5	1.9	—	—	4.8	4.7	6.0	21	80	79	—	—	—	—	43
C 80 3_136.7	136.7	1.4	—	—	4.3	4.2	5.5	20	80	78	—	—	—	—	43
C 80 3_149.1	149.1	1.4	—	—	4.2	4.2	5.5	20	80	77	—	—	—	—	43
C 80 3_169.0	169.0	1.0	—	—	3.9	3.8	5.1	20	80	77	—	—	—	—	42
C 80 3_184.4	184.4	1.0	—	—	3.9	3.8	5.1	20	80	77	—	—	—	—	42
C 80 3_197.9	197.9	0.80	—	—	3.7	3.6	4.9	—	—	—	—	—	—	—	42
C 80 3_215.8	215.8	0.80	—	—	3.6	3.6	4.9	—	—	—	—	—	—	—	42
C 80 4_261.9	261.9	1.7	—	—	4.6	4.5	5.8	21	—	—	—	—	—	—	12
C 80 4_285.7	285.7	1.7	—	—	4.6	4.5	5.8	21	—	—	—	—	—	—	12
C 80 4_334.3	334.3	1.2	2.7	2.7	4.0	4.0	5.3	20	—	—	—	—	—	—	11
C 80 4_364.7	364.7	1.2	2.7	2.6	4.0	4.0	5.3	20	—	—	—	—	—	—	11
C 80 4_417.5	417.5	0.90	2.4	2.3	3.7	3.7	5.0	20	—	—	—	—	—	—	11
C 80 4_455.4	455.4	0.90	2.3	2.3	3.7	3.7	5.5	20	—	—	—	—	—	—	11
C 80 4_529.3	529.3	0.50	2.0	2.0	3.4	3.3	4.6	19	—	—	—	—	—	—	11
C 80 4_577.4	577.4	0.50	2.0	2.0	3.4	3.3	4.6	19	—	—	—	—	—	—	11
C 80 4_664.3	664.3	0.40	2.0	1.9	3.3	3.2	4.5	19	—	—	—	—	—	—	11
C 80 4_724.7	724.7	0.40	2.0	1.9	3.3	3.2	4.5	19	—	—	—	—	—	—	11
C 80 4_783.4	783.4	0.30	2.0	1.8	3.2	3.1	4.4	—	—	—	—	—	—	—	9.4
C 80 4_854.6	854.6	0.30	2.0	1.8	3.2	3.1	4.4	—	—	—	—	—	—	—	9.4
C 80 4_945.7	945.7	0.20	1.7	1.7	3.1	3.0	4.3	—	—	—	—	—	—	—	9.3
C 80 4_1032	1032	0.20	1.7	1.7	3.1	3.0	4.3	—	—	—	—	—	—	—	9.3
C 80 4_1168	1168	0.20	1.6	1.6	3.0	3.0	4.2	—	—	—	—	—	—	—	9.2
C 80 4_1274	1274	0.20	1.6	1.6	3.0	3.0	4.2	—	—	—	—	—	—	—	9.2
C 80 4_1358	1358	0.10	1.6	1.6	3.0	2.9	4.2	—	—	—	—	—	—	—	9.2
C 80 4_1481	1481	0.10	1.6	1.6	3.0	2.9	4.2	—	—	—	—	—	—	—	9.2

C 90

		J (•10^{-4}) [kgm^2]													
	i	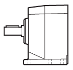	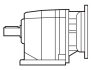 **IEC**												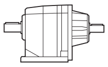
			63	**71**	**80**	**90**	**100** **112**	**132**	**160**	**180**	**200**	**225**	**250**	**280**	
C 90 2_5.2	5.2	—	—	—	—	—	—	—	—	—	332	610	637	—	619
C 90 2_5.6	5.6	—	—	—	—	—	—	—	—	—	321	599	626	—	609
C 90 2_6.8	6.8	—	—	—	—	—	—	—	—	—	252	530	557	—	540
C 90 2_7.3	7.3	—	—	—	—	—	—	—	—	—	246	524	551	—	533
C 90 2_8.3	8.3	—	—	—	—	—	—	—	—	—	212	490	517	—	499
C 90 2_9.0	9.0	—	—	—	—	—	—	—	—	—	208	485	513	—	495
C 90 2_10.4	10.4	—	—	—	—	—	—	—	167	164	175	458	484	—	461
C 90 2_11.2	11.2	—	—	—	—	—	—	—	164	162	173	455	482	—	458
C 90 2_12.8	12.8	65	—	—	—	—	—	84	143	141	152	436	462	—	439
C 90 2_13.9	13.9	63	—	—	—	—	—	82	141	139	200	434	460	—	437
C 90 2_16.0	16.0	47	—	—	—	—	—	66	125	123	154	417	443	—	420
C 90 2_17.3	17.3	46	—	—	—	—	—	65	124	122	153	416	442	—	419
C 90 2_18.7	18.7	42	—	—	—	—	—	61	121	119	148	412	433	—	415
C 90 2_20.2	20.2	41	—	—	—	—	—	61	199	118	147	411	438	—	414
C 90 2_22.9	22.9	28	—	—	30	30	31	47	106	104	133	397	423	—	400
C 90 2_24.8	24.8	27	—	—	29	29	31	46	105	103	133	396	422	—	399
C 90 2_27.2	27.2	22	—	—	25	25	26	41	101	99	128	391	418	—	394
C 90 2_29.4	29.4	22	—	—	25	24	26	41	100	98	127	391	417	—	394
C 90 2_35.1	35.1	14	—	—	17	17	18	33	93	90	—	—	—	—	386
C 90 3_39.4	39.4	27	—	—	—	—	—	46	105	103	112	398	424	—	412
C 90 3_43.0	43.0	26	—	—	—	—	—	45	104	102	111	396	422	—	410
C 90 3_50.3	50.3	19	—	—	—	—	—	38	98	95	126	389	415	—	403
C 90 3_54.9	54.9	19	—	—	—	—	—	37	97	95	125	389	415	—	401
C 90 3_59.2	59.2	16	—	—	—	—	—	35	94	92	122	385	411	—	398
C 90 3_64.6	64.6	15	—	—	—	—	—	34	94	91	121	384	410	—	398
C 90 3_74.4	74.4	10	—	—	13	13	14	29	88	86	116	379	405	—	393
C 90 3_81.2	81.2	9.8	—	—	12	12	13	29	88	86	115	379	405	—	392
C 90 3_88.2	88.2	7.1	—	—	9.7	9.6	11	26	85	83	113	376	402	—	389
C 90 3_96.2	96.2	6.9	—	—	9.4	9.4	11	26	85	83	112	376	402	—	389
C 90 3_107.0	107.0	5.7	—	—	8.4	8.4	9.6	25	84	82	—	—	—	—	388
C 90 3_116.7	116.7	5.5	—	—	8.3	8.2	9.5	24	84	82	—	—	—	—	388
C 90 3_134.1	134.1	3.5	—	—	6.4	6.3	7.6	22	82	80	—	—	—	—	386
C 90 3_146.3	146.3	3.4	—	—	6.3	6.2	7.5	22	82	80	—	—	—	—	386
C 90 3_157.8	157.8	2.5	—	—	5.4	5.3	6.6	21	81	79	—	—	—	—	385
C 90 3_172.1	172.1	2.4	—	—	5.3	5.2	6.5	21	81	79	—	—	—	—	385
C 90 4_212.4	212.4	4.2	—	—	7.0	7.0	8.3	23	83	80	—	—	—	—	14
C 90 4_231.7	231.7	4.1	—	—	7.0	6.9	8.2	23	82	80	—	—	—	—	14
C 90 4_268.5	268.5	2.8	—	—	5.7	5.6	6.9	22	81	79	—	—	—	—	13
C 90 4_292.9	292.9	2.8	—	—	5.7	2.6	6.9	22	81	79	—	—	—	—	13
C 90 4_339.0	339.0	2.0	3.4	3.4	4.8	4.8	6.0	21	80	78	—	—	—	—	12
C 90 4_369.8	369.8	2.0	3.4	3.4	4.8	4.8	6.0	21	80	78	—	—	—	—	12
C 90 4_419.0	419.0	1.4	2.9	2.9	4.3	4.2	5.5	20	80	78	—	—	—	—	12
C 90 4_457.1	457.1	1.4	2.9	2.9	4.3	4.2	5.5	20	80	78	—	—	—	—	12
C 90 4_534.2	534.2	0.90	2.4	2.4	3.8	3.7	5.0	20	79	77	—	—	—	—	11
C 90 4_582.8	582.8	0.90	2.4	2.4	3.8	3.7	5.0	20	79	77	—	—	—	—	11
C 90 4_652.8	652.8	0.70	2.1	2.1	3.5	3.5	4.7	20	79	77	—	—	—	—	11
C 90 4_712.2	712.2	0.70	2.1	2.1	3.5	3.5	4.7	20	79	77	—	—	—	—	11
C 90 4_773.6	773.6	0.50	2.0	2.0	3.4	3.3	4.6	—	—	—	—	—	—	—	9.7
C 90 4_844.0	844.0	0.50	2.0	2.0	3.4	3.3	4.6	—	—	—	—	—	—	—	9.6
C 90 4_922.3	922.3	0.40	1.8	1.8	3.2	3.2	4.5	—	—	—	—	—	—	—	9.5
C 90 4_1006	1006	0.40	1.8	1.8	3.2	3.2	4.5	—	—	—	—	—	—	—	9.4
C 90 4_1137	1137	0.30	1.7	1.7	3.1	3.0	4.3	—	—	—	—	—	—	—	9.3
C 90 4_1240	1240	0.30	1.7	1.7	3.1	3.0	4.3	—	—	—	—	—	—	—	9.3

C 100

		J (•10^{-4}) [kgm^2]													
	i	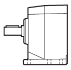	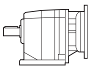 **IEC**												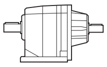
			63	**71**	**80**	**90**	**100** **112**	**132**	**160**	**180**	**200**	**225**	**250**	**280**	
C 100 2_4.9	4.9	—	—	—	—	—	—	—	—	—	674	960	987	970	972
C 100 2_5.3	5.3	—	—	—	—	—	—	—	—	—	647	933	960	943	944
C 100 2_6.5	6.5	—	—	—	—	—	—	—	—	—	481	767	794	777	778
C 100 2_7.1	7.1	—	—	—	—	—	—	—	—	—	465	751	778	761	763
C 100 2_8.4	8.4	—	—	—	—	—	—	—	—	—	365	651	678	660	662
C 100 2_9.0	9.0	—	—	—	—	—	—	—	—	—	355	641	668	651	653
C 100 2_10.1	10.1	—	—	—	—	—	—	—	—	—	291	577	604	587	589
C 100 2_10.9	10.9	—	—	—	—	—	—	—	—	—	285	570	597	580	582
C 100 2_12.5	12.5	—	—	—	—	—	—	—	224	222	233	521	550	539	529
C 100 2_13.5	13.5	—	—	—	—	—	—	—	220	218	228	517	545	532	524
C 100 2_15.2	15.2	122	—	—	—	—	—	82	141	200	199	472	499	528	514
C 100 2_16.5	16.5	119	—	—	—	—	—	138	197	195	206	496	525	511	504
C 100 2_18.7	18.7	97	—	—	—	—	—	116	175	173	203	474	501	488	480
C 100 2_20.2	20.2	95	—	—	—	—	—	114	173	171	201	471	499	486	478
C 100 2_22.2	22.2	73	—	—	—	—	—	92	102	150	179	448	477	463	456
C 100 2_24.1	24.1	72	—	—	—	—	—	91	150	148	178	447	476	462	455
C 100 2_29.6	29.6	50	—	—	—	—	54	69	129	127	156	425	454	440	433
C 100 3_34.3	34.3	—	—	—	—	—	—	—	148	146	155	439	465	471	461
C 100 3_36.9	36.9	—	—	—	—	—	—	—	145	143	152	436	462	468	458
C 100 3_42.9	42.9	44	—	—	—	—	—	63	123	120	130	415	441	451	437
C 100 3_46.2	46.2	43	—	—	—	—	—	61	121	118	128	413	439	452	435
C 100 3_53.3	53.3	33	—	—	—	—	—	51	111	109	139	403	429	432	424
C 100 3_57.4	57.4	31	—	—	—	—	—	50	110	107	138	401	427	431	423
C 1003_64.5	64.5	24	—	—	—	—	—	43	103	101	130	394	420	422	415
C 100 3_69.4	69.4	24	—	—	—	—	—	43	102	100	129	393	419	421	414
C 100 3_79.4	79.4	16	—	—	—	—	20	35	95	92	122	385	411	413	407
C 100 3_85.6	85.6	16	—	—	—	—	19	35	94	92	121	385	411	413	406
C 100 3_92.7	92.7	15	—	—	—	—	18	34	93	91	120	384	410	412	405
C 100 3_99.8	99.8	14	—	—	—	—	18	33	93	90	119	383	409	411	404
C 100 3_111.9	111.9	9.9	—	—	—	—	14	29	88	86	—	—	—	—	392
C 100 3_120.5	120.5	9.6	—	—	—	—	14	29	88	86	—	—	—	—	392
C 100 3_139.7	139.7	6.0	—	—	—	—	10	25	84	82	—	—	—	—	388
C 100 3_150.4	150.4	5.8	—	—	—	—	9.8	25	84	82	—	—	—	—	388
C 100 4_162.1	162.1	13	—	—	16	16	17	32	100	89	—	—	—	—	23
C 100 4_185.4	185.4	9.6	—	—	13	12	14	29	88	86	—	—	—	—	20
C 100 4_199.6	199.6	8.5	—	—	12	12	14	28	88	86	—	—	—	—	20
C 100 4_244.2	244.2	5.7	—	—	8.5	8.5	9.8	25	84	82	—	—	—	—	16
C 100 4_263.0	263.0	5.6	—	—	8.5	8.4	9.7	25	84	82	—	—	—	—	16
C 100 4_300.5	300.5	4.2	—	—	7.1	7.1	8.4	23	83	80	—	—	—	—	15
C 100 4_323.6	323.6	4.2	—	—	7.1	7.0	8.3	23	83	80	—	—	—	—	14
C 100 4_380.5	380.5	3.1	4.5	4.5	5.9	5.5	7.1	22	81	79	—	—	—	—	13
C 100 4_409.8	409.8	3.0	4.5	4.5	5.9	5.5	7.1	22	81	79	—	—	—	—	13
C 100 4_466.7	466.7	2.0	3.5	3.5	4.9	4.8	6.1	20	80	78	—	—	—	—	12
C 100 4_502.6	502.6	2.0	3.5	3.4	4.8	4.8	6.1	20	80	78	—	—	—	—	12
C 100 4_582.6	582.6	1.4	2.9	2.9	4.3	4.2	5.5	20	80	77	—	—	—	—	12
C 100 4_627.4	627.4	1.4	2.9	2.9	4.3	4.2	5.5	20	80	77	—	—	—	—	12
C 100 4_720.3	720.3	1.0	2.5	2.5	3.9	3.4	5.1	20	79	77	—	—	—	—	11
C 100 4_775.7	775.7	1.0	2.5	2.5	3.9	3.4	5.1	20	79	77	—	—	—	—	11
C 100 4_843.3	843.3	0.80	2.3	2.3	3.7	3.6	4.9	—	—	—	—	—	—	—	9.9
C 100 4_908.2	908.2	0.80	2.3	2.3	3.7	3.6	4.9	—	—	—	—	—	—	—	9.9
C 100 4_1004	1004	0.60	2.1	2.0	3.4	3.4	4.7	—	—	—	—	—	—	—	9.7
C 100 4_1081	1081	0.60	2.1	2.0	3.4	3.4	4.7	—	—	—	—	—	—	—	9.7

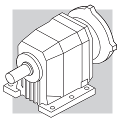

29 EXAKTE ÜBERSETZUNG

i_N	C12	C22	C32	C36	C41	C51	C61	C70	C80	C90	C100
2.5						2.62895					
2.8	2.76731	2.72212	2.87879	2.68687	2.65909		2.82011				
3.2	3.20743	3.32609		3.18182		3.30758					
3.5	3.65132	3.70709	3.40909	3.48617	3.61111		3.69925				
4.0			3.73518	4.20000							
4.5	4.31203	4.25831	4.50000	4.62201	4.66304	4.45370	4.55556	4.57143			
5.0	4.86842	4.76902	4.95215	5.27807						5.17231	4.92308
5.6	5.59868	5.59006	5.65508	5.84659	5.95263	5.63043		5.85034	5.64103	5.60333	5.33333
6.3	6.23158	6.08696	6.26420		6.36364		6.00176 6.74074	6.25455	6.11111	6.75824	6.52308
7.1		7.08300	7.16498	6.78114	7.06612	6.98684	7.48485	7.46032	7.04000	7.32143	7.06667
8.0	7.62201		8.48485	8.03030		7.75120		8.00433	7.62667	8.32615	8.35165
9.0	8.83422	8.65455	9.29644	8.79842	8.64198	8.79040	8.84211	9.52381	8.86447	9.02000	9.04762
10.0	10.05682	9.64593		10.60000	9.59596	9.75207	9.81818	10.20707	9.60317	10.36264	10.09231
11.2		11.08021	11.20000	11.66507	11.15942	11.83642	10.88889	11.20879	11.09402	11.22619	10.93333
12.5	11.87662	12.40909	12.32536	13.32086	12.39130	13.13131	12.09091	13.03030	12.01852	12.79060	12.45421
14.0	13.40909	14.54545	14.07487	14.75568	14.24561	14.96377	14.34568	14.09524	13.76410 14.91111	13.85648	13.49206
16.0	15.42045	15.83838	15.59091		15.81818	16.60079	15.92929	15.33566 16.70330	16.66272	15.97949	15.21368 16.48148
18.0	17.16364 18.38961	18.13636	18.18182	17.20779	17.79167	18.89035	17.65217		18.05128	17.31111 18.68047	18.66667
20.0	20.62937	20.02424	20.08081	19.00505	19.75568	20.95694 21.81606	19.60079	19.28485	20.53333	20.23718	20.22222
22.4	23.24242	21.45455	22.90909	22.13187	22.55556	23.35417 23.89242	22.35088	22.85315	22.24444	22.91795	22.24852
25.0	25.35537	24.27972	25.11515	26.20879	25.04545	25.90909	24.81818 26.77895		23.95266 25.94872	24.82778	24.10256
28.0	29.50000	27.15152 29.61983	26.90909	28.71572	28.31111 28.49003	27.44759 29.77315	27.41667 29.35385	27.71901		27.17160 29.43590	29.55556
31.5	32.77778	33.09091	29.76224 33.09091		31.22945 31.43636	30.05994 33.03030	30.44318 32.97778		31.33333		
35.5	37.00909	36.76768	36.09917	34.59560	33.38462 36.78930	36.38333 36.95862	34.22222 36.14872	34.74747		35.09848	34.29705 36.93529
40.0	42.31313		40.72727	38.07172	37.06993 40.32673	40.36364 40.47619	38.00000	41.26263	39.11111	39.40239	42.92328
45.0		43.27273	45.25253	43.47576	44.75207 46.96356	43.11538 46.72360	43.44691	44.70118	43.49074	42.98443	46.22507
50.0	47.60227	48.64646	52.43636	48.15865	51.47929	47.83217 51.40152	47.62450	52.16479	47.44444	50.30093	53.25397
56.0	55.16883	54.72727	59.39394	56.16170	58.65385	57.02479 58.98416	53.46087 58.60134	56.51186	57.29733	54.87374 59.20032	57.35043
63.0	66.15152	60.00000 63.27273	66.81818	62.02747	64.29364	64.59803		65.85315	62.50617	64.58217	64.46886
71.0		65.33333 74.81250	74.74747	70.76374	74.35897	72.92219	67.69123 74.20000	71.34091	70.50362	74.44537	69.42801
80.0		82.60000	82.55443	77.57802 83.11931	81.50888	79.86264	83.03333	81.41434	76.91304	81.21313	79.44444
90.0		88.50000	94.18182	91.93238	93.33333	92.96514	91.01731	88.19886	89.27047	88.22009	85.55556 92.67399
100.0		100.15385	103.25118	102.21429	102.30769	101.81319	103.64444	103.79138	97.38596	96.24009	99.80276

▨ 2x

░ 3x

i_N	C12	C22	C32	C36	C41	C51	C61	C70	C80	C90	C100
112.2		112.00000	110.62626	111.50649	110.05917	113.60510	113.61026	112.44066	109.50347	107.00379 116.73140	111.90476
125.5		122.18182	122.35587	125.80220	120.64178	124.41758	128.14222	126.83497	119.45833		120.51282
140.0		136.50000	136.04040 148.40771	139.78022	132.86713 145.64282	134.62559 147.43872	140.46359	137.40455	136.68519 149.11111	134.13580 146.32997	139.68254
160.0		151.66667	167.43434	161.97033	164.10256	160.49861	150.03077 164.45680	150.30339 162.82867	168.99259	157.76199	150.42735 162.10526
180.0		178.50000	186.03816	183.46154	179.88166	175.77423	178.59394	179.18945	184.35556	172.10399	185.37037
200.0		200.66667		206.39423	190.76923 209.11243	197.87075	195.76643	194.12190	197.85897	212.38169	199.62963
225.0		225.75000	215.57172	230.88697		216.70330	217.40754	220.91375	215.84615	231.68911	
250.0		261.00000	244.17508	255.00183	239.94755	240.85197 263.77530	238.31211	239.32323 251.28438	261.85613	268.49591	244.21811 263.00412
280.0			274.69697	290.91758	263.01943		275.27766	272.22475	285.66123	292.90463	300.50725
315.0				318.93187	304.19580 333.44540	297.76563 326.10577	301.74667	317.86109	334.27376	338.95085	323.62319
355.0				341.71272			337.66889 370.13705	344.34951	364.66228	369.76457	380.49708
400.0				377.94421 420.21429	381.81818 418.53147	379.60764 415.73718	421.48741	409.39931	417.48199	419.04541	409.76608
450.0				458.41558	450.24207	463.88750	462.01504	443.51592	455.43490	457.14044	466.73611
500.0				517.18681	493.53457	508.03846	521.11170	512.03745	529.26678		502.63889
560.0				574.65201	543.54736	549.72115	571.21860	554.70724	577.38194	534.22163 582.78723	582.59259
630.0				665.87802	595.81153	602.04142 655.36932	610.12513 668.79101	606.78035 657.34538	664.32106	652.82863	627.40741
710.0				754.23077	671.32867 735.87951	717.74476	726.28202	735.97521	724.71389	712.17669	720.29630
800.0				848.50962	780.41958	807.97222	796.11683	797.30647	783.37099	773.62229 843.95159	775.70370 843.33333
900.0					855.45992	884.87179		922.59000	854.58654 945.71181	922.30089	908.20513
1000.0								999.47250 1069.05117	1031.68561	1006.14643	1003.88889
1125.0								1158.13876	1168.03704	1137.05888	1081.11111
1250.0									1274.22222	1240.42787	
1400.0								1362.26180 1475.78362	1357.84306 1481.28333		

░ 3x

▓ 4x

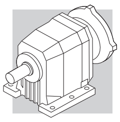

C 05...M

P

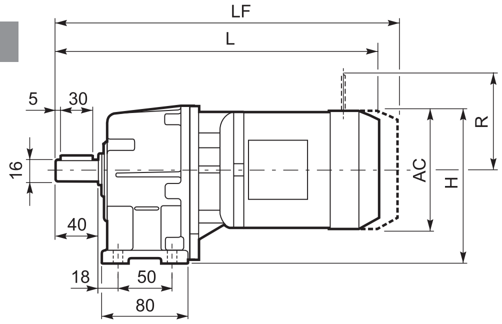
LF
L
5
30
16
40
18
50
80
AC
H
R

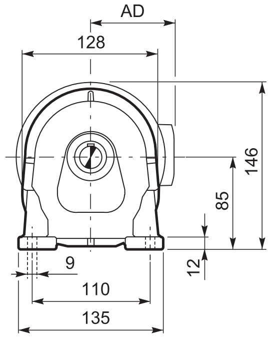
AD
128
146
85
9
12
110
135

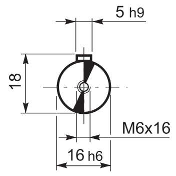
5 h9
18
M6x16
16 h6

OUTPUT

F

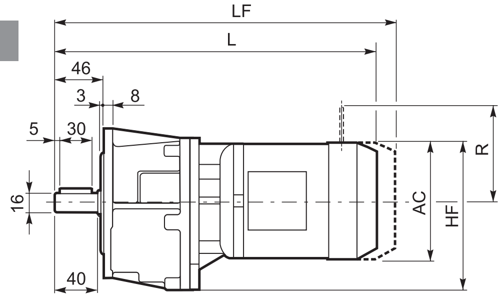
LF
L
46
3
8
5
30
16
40
AC
HF
R

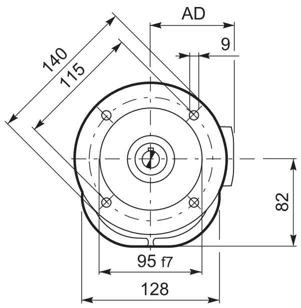
AD
9
140
115
82
95 f7
128

			AC	H	HF	L	AD	Kg	M...FD M...FA		M...FD		M...FA	
									LF	Kg	R	AD	R	AD
C 05 2	**S0**	**M0**	110	140	137	287	91	7	—	—	—	—	—	—
C 05 2	**S05**	**M05**	121	145.5	142.5	332	95	8	398	10	96	122	116	95
C 05 2	**S1**	**M1**	138	154	151	360.5	108	11	423	13	103	135	124	108

C 12...M

P

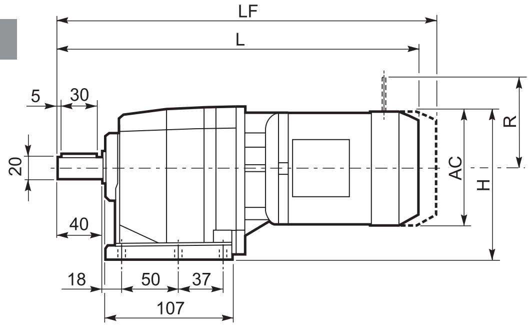
LF
L
5
30
20
40
18
50
37
107
AC
H
R

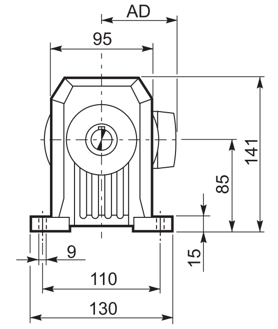
AD
95
141
85
15
9
110
130

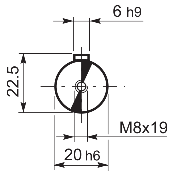
6 h9
22.5
M8x19
20 h6

OUTPUT

F

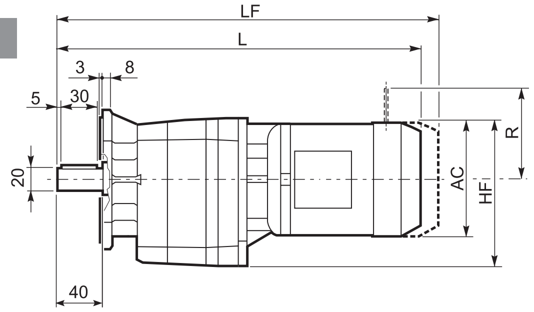
LF
L
3
8
5
30
20
40
AC
HF
R

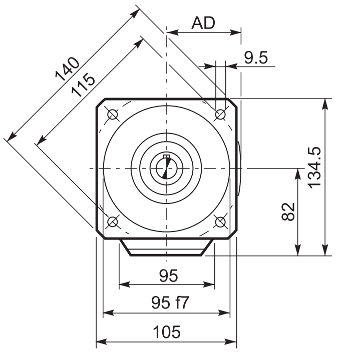
AD
140
115
9.5
134.5
82
95
95 f7
105

U

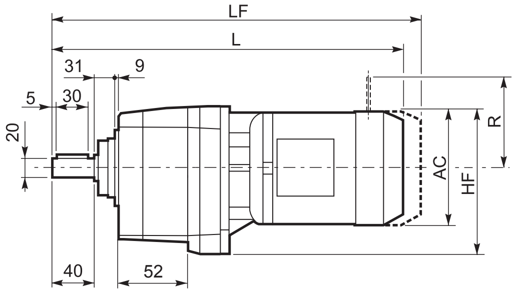
LF
L
31
9
5
30
20
40
52
AC
HF
R

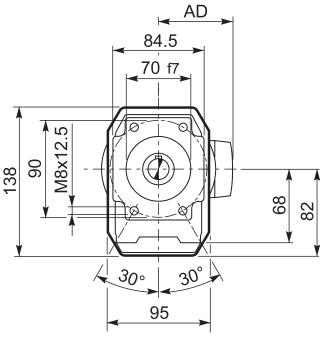
AD
84.5
70 f7
138
90
M8x12.5
68
82
30°
30°
95

UF

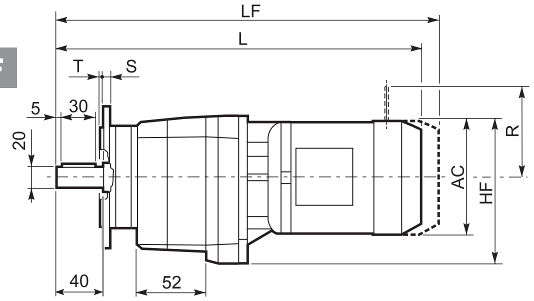
LF
L
T
S
5
30
20
40
52
AC
HF
R

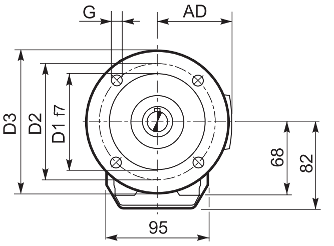
G
AD
D3
D2
D1 f7
68
82
95

C 12 2_U						
	D1	D2	D3	G	T	S
FA	80	100	120	7	3	8
FB	95	115	140	9	3	10
FC	110	130	160	9	3	10

									M...FD M...FA		M...FD		M...FA	
			AC	H	HF	L	AD	Kg	LF	Kg	R	AD	R	AD
C 12 2	**S05**	**M05**	121	145.5	142.5	370.5	95	9	436.5	10	96	122	116	95
C 12 2	**S1**	**M1**	138	154	151	404.5	108	11	460.5	13	103	135	124	108
C 12 2	**S2**	**M2S**	156	163	160	428.5	119	15	498.5	18	129	146	134	119
C 12 2	**S3**	**M3S**	195	182.5	179.5	471.5	142	20	567.5	25	160	158	160	142
C 12 2	**S3**	**M3L**	195	182.5	179.5	503.5	142	22	594.5	27	160	158	160	142

C 12...P (IEC)

P

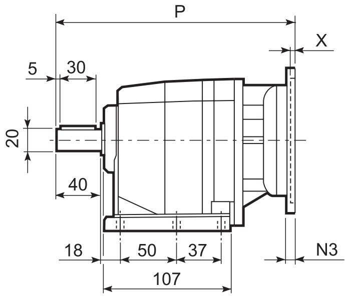
P
X
5
30
20
40
18
50
37
107
N3

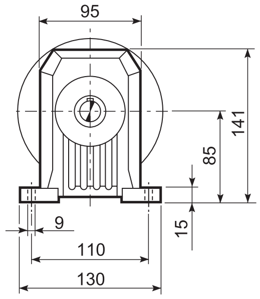
95
141
85
15
9
110
130

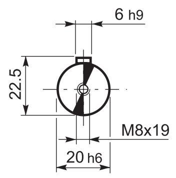
6 h9
22.5
M8x19
20 h6

OUTPUT

F

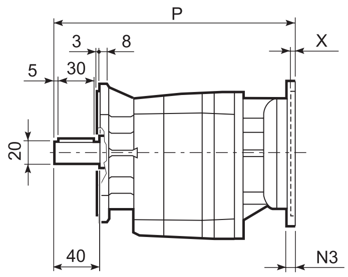
P
3
8
X
5
30
20
40
N3

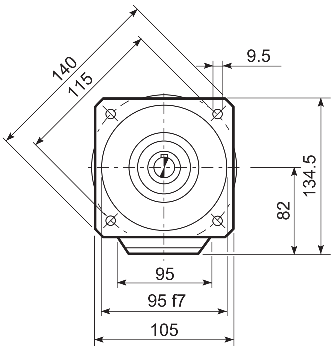
140
115
9.5
134.5
82
95
95 f7
105

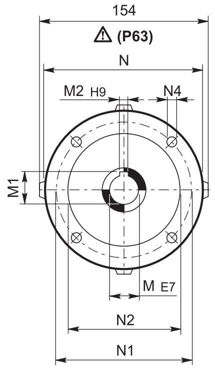
154
⚠ (P63)
N
M2 H9
N4
M1
M E7
N2
N1

INPUT

U

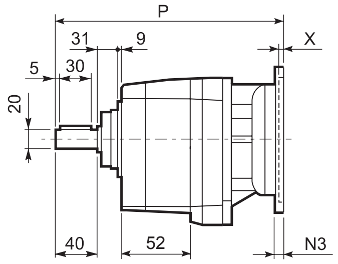
P
31
9
X
5
30
20
40
52
N3

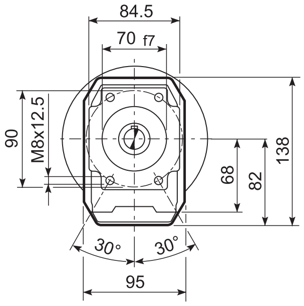
84.5
70 f7
90
M8x12.5
68
82
138
30°
30°
95

UF

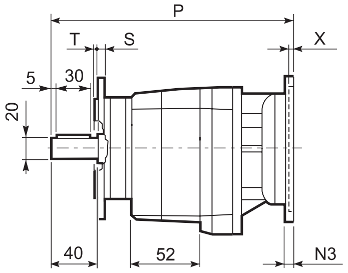
P
T
S
X
5
30
20
40
52
N3

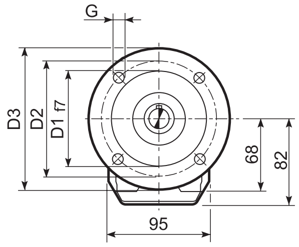
G
D3
D2
D1 f7
68
82
95

C 12 2_U	D1	D2	D3	G	T	S
FA	80	100	120	7	3	8
FB	95	115	140	9	3	10
FC	110	130	160	9	3	10

		M	M1	M2	N	N1	N2	N3	N4	X	P	Kg
C 12 2	**P63**	11	12.8	4	140	115	95	—	M8x19	4	244.5	6
C 12 2	**P71**	14	16.3	5	160	130	110	—	M8x16	4.5	244.5	6
C 12 2	**P80**	19	21.8	6	200	165	130	—	M10x14.5	4	264	7
C 12 2	**P90**	24	27.3	8	200	165	130	—	M10x14.5	4	264	7
C 12 2	**P100**	28	31.3	8	250	215	180	—	M12x16	4.5	274	11
C 12 2	**P112**	28	31.3	8	250	215	180	—	M12x16	4.5	274	11

C 12...SK / SC

P

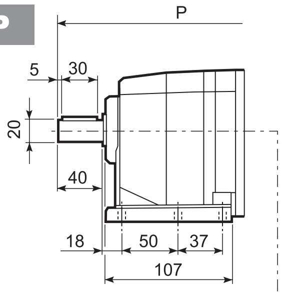
P
5
30
20
40
18
50
37
107

F

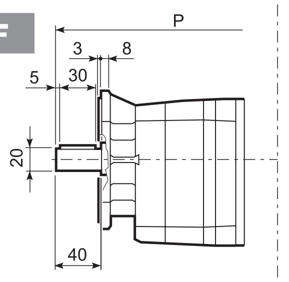
P
3
8
5
30
20
40

U

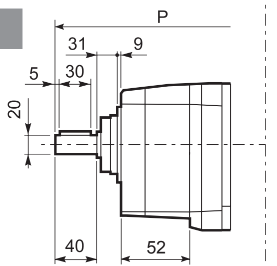
P
31
9
5
30
20
40
52

UF

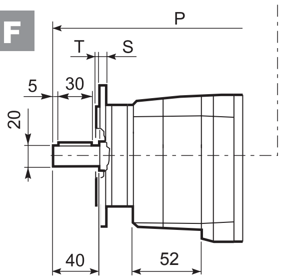
P
T
S
5
30
20
40
52

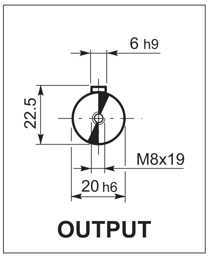
6 h9
22.5
M8x19
20 h6
OUTPUT

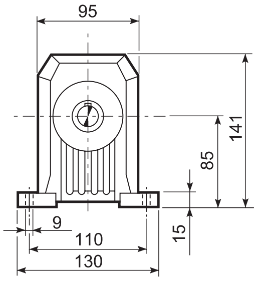
95
141
85
15
9
110
130

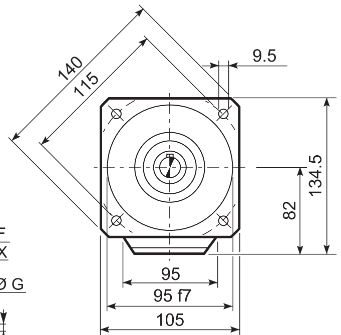
140
115
9.5
134.5
82
95
95 f7
105

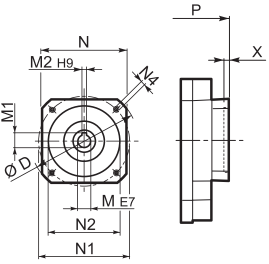
P
X
N
M2 H9
N4
M1
Ø D
M E7
N2
N1

SK...

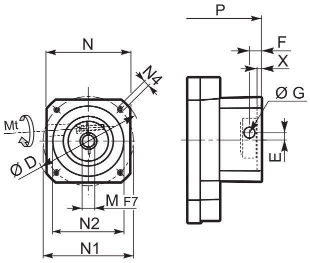
P
F
X
N
N4
Ø G
Mt
Ø D
E
M F7
N2
N1

SC...

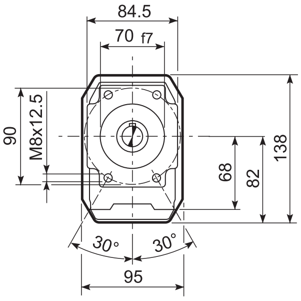
84.5
70 f7
90
M8x12.5
68
82
138
30°
30°
95

C 12 2_U						
	D1	D2	D3	G	T	S
FA	80	100	120	7	3	8
FB	95	115	140	9	3	10
FC	110	130	160	9	3	10

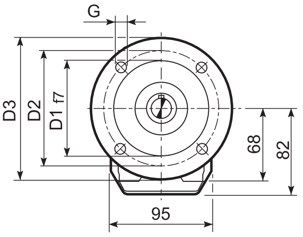
G
D3
D2
D1 f7
68
82
95

		D	M	M1	M2	N	N1	N2	N4	X	P	Kg
C 12 2	SK60A	102	11	12.8	4	82	75	60	M5x10	3.5	216	6
C 12 2	SK60B	102	14	16.3	5	82	75	60	M5x10	4	223	5
C 12 2	SK80A	115	14	16.3	5	90	100	80	M6x12	4	223	5
C 12 2	SK80C	120	19	21.8	6	96	100	80	M6x12	4	264	7
C 12 2	SK95A	130	14	16.3	5	102	115	95	M8x12	4	264	6
C 12 2	SK95B	130	19	21.8	6	102	115	95	M8x12	4	264	7
C 12 2	SK95C	130	24	27.3	8	102	115	95	M8x12	4	264	7
C 12 2	SK110A	150	19	21.8	6	120	130	110	M8x12	5	264	7
C 12 2	SK110B	150	24	27.3	8	120	130	110	M8x12	5	264	7

			Mt [Nm]	D	E	F	G	M	N	N1	N2	N4	X	P	Kg
C 12 2	SC60A	M6	15	102	7	12.5	12.5	11	82	75	60	M5x10	4	243	7
C 12 2	SC60B	M6	15	102	7	12.5	12.5	14	82	75	60	M5x10	4	243	6
C 12 2	SC80A	M6	15	115	6	12.5	12.5	14	90	100	80	M6x12	4	243	6
C 12 2	SC80C	M6	15	120	15.5	14.5	17.75	19	96	100	80	M6x12	4	287.5	8
C 12 2	SC95A	M6	15	130	16.5	15	17.75	14	102	115	95	M8x16	4	287.5	7
C 12 2	SC95B	M6	15	130	16.5	15	17.75	19	102	115	95	M8x16	4	287.5	8
C 12 2	SC95C	M6	15	130	16.5	15	17.75	24	102	115	95	M8x16	4	287.5	8
C 12 2	SC110A	M6	15	150	16.5	16	17.75	19	120	130	110	M8x16	5	287.5	10
C 12 2	SC110B	M6	15	150	16.5	16	17.75	24	120	130	110	M8x16	5	287.5	10

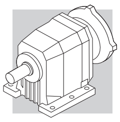

C 12...HS

P

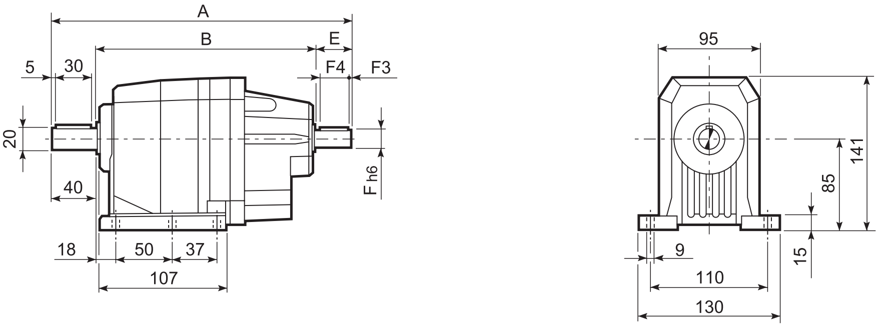
A
B
E
5
30
F4
F3
20
F h6
40
18
50
37
107
95
141
85
15
9
110
130

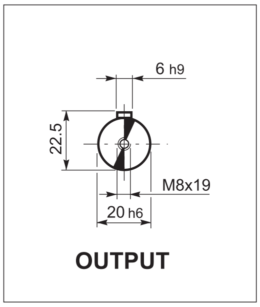
6 h9
22.5
M8x19
20 h6

OUTPUT

F

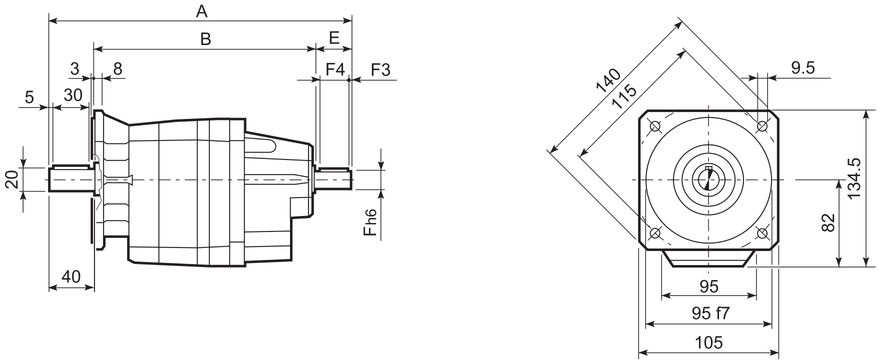
A
B
E
3
8
F4
F3
5
30
20
F h6
40
140
115
9.5
134.5
82
95
95 f7
105

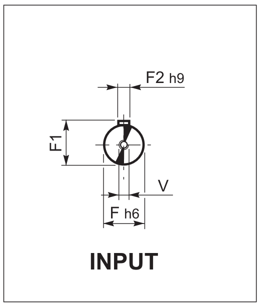
F2 h9
F1
V
F h6

INPUT

U

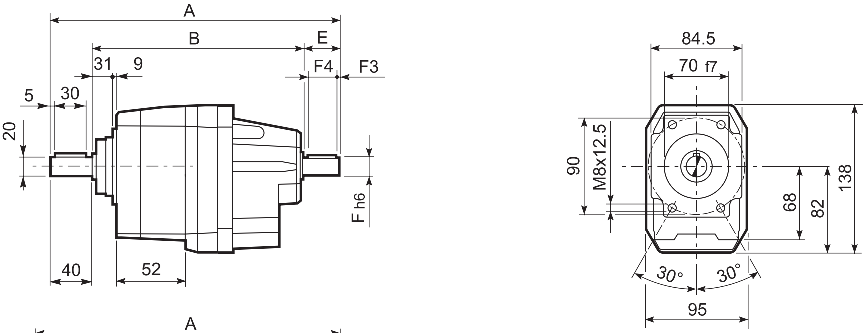
A
B
E
31
9
F4
F3
5
30
20
F h6
40
52
84.5
70 f7
90
M8x12.5
68
82
138
30°
30°
95

UF

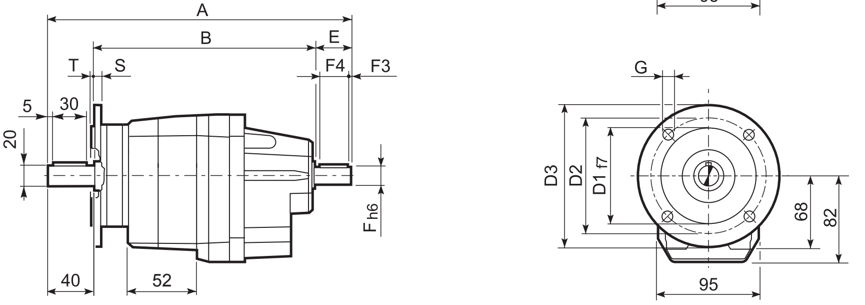
A
B
E
T
S
F4
F3
5
30
20
F h6
40
52
G
D3
D2
D1 f7
68
82
95

C 12 2_U						
	D1	D2	D3	G	T	S
FA	80	100	120	7	3	8
FB	95	115	140	9	3	10
FC	110	130	160	9	3	10

		A	B	E	F	F1	F2	F3	F4	V	Kg
C 12 2	HS	251.5	171.5	40	16	18	5	2.5	35	M6x16	7.8

C 22...M

P

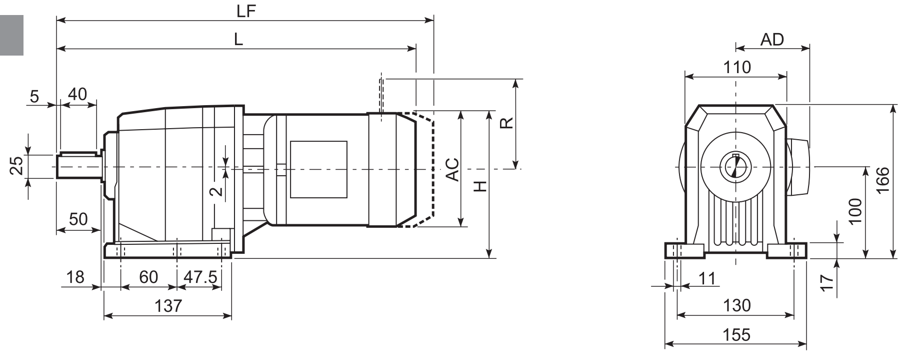
LF
L
5
40
25
2
50
18
60
47.5
137
AC
H
R
AD
110
166
100
17
11
130
155

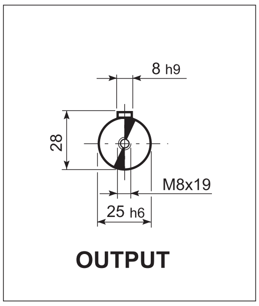
8 h9
28
M8x19
25 h6
OUTPUT

F

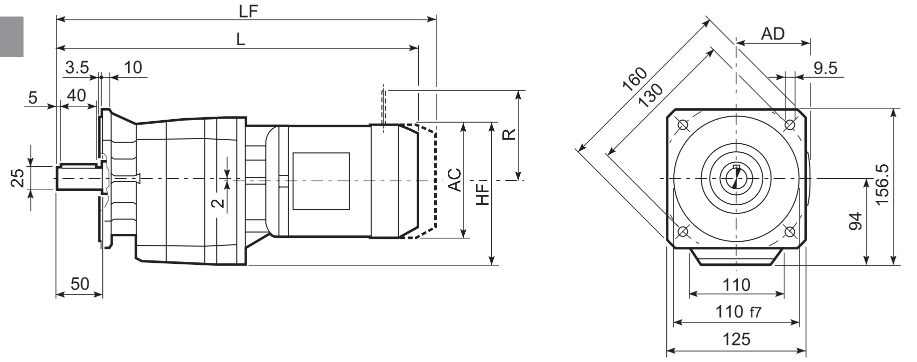
LF
L
3.5
10
5
40
25
2
50
AC
HF
R
160
130
AD
9.5
156.5
94
110
110 f7
125

U

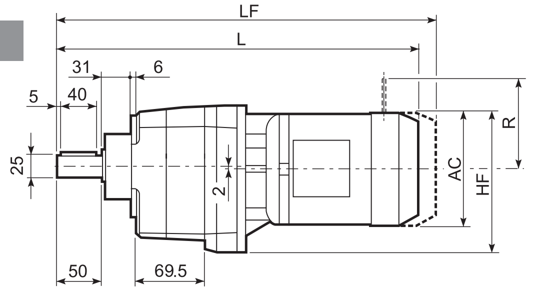
LF
L
31
6
5
40
25
2
50
69.5
AC
HF
R

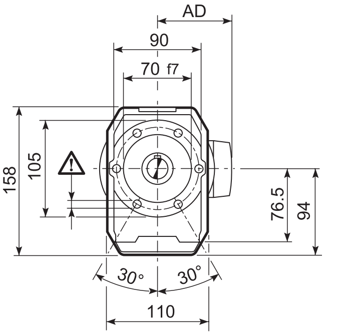
AD
90
70 f7
158
105
76.5
94
30°
30°
110

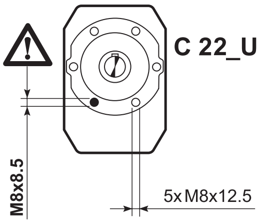
C 22_U
M8x8.5
5x M8x12.5

UF

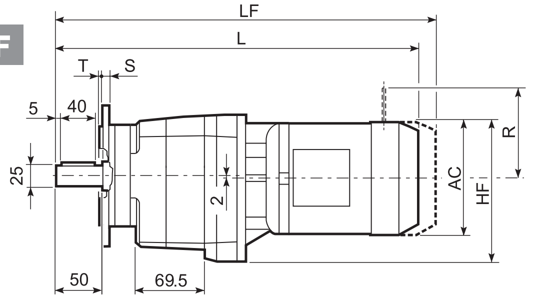
LF
L
T
S
5
40
25
2
50
69.5
AC
HF
R

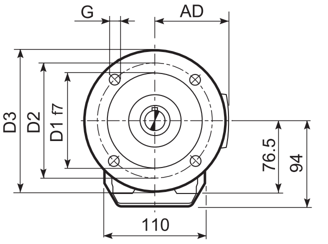
G
AD
D3
D2
D1 f7
76.5
94
110

C 22_U	D1	D2	D3	G	T	S
FA	95	115	140	9	3	10
FB	110	130	160	9	3	10
FC	130	165	200	11	3.5	11

									M...FD M...FA		M...FD		M...FA	
			AC	H	HF	L	AD	Kg	LF	Kg	R	AD	R	AD
C 22 2	**S05**	**M05**	121	160.5	154.5	399	95	8	465	10	96	119	116	95
C 22 2	**S1**	**M1**	138	169	163	428	108	11	489	14	103	135	124	108
C 22 2	**S2**	**M2S**	156	178	170	456	119	16	527	19	129	146	134	119
C 22 2	**S3**	**M3S**	195	197.5	191.5	500	142	21	596	26	160	158	160	142
C 22 2	**S3**	**M3L**	195	197.5	191.5	532	142	27	623	32	160	158	160	142
C 22 3	**S05**	**M05**	121	160.5	154.5	454.5	95	11	520.5	12	96	122	116	95
C 22 3	**S1**	**M1**	138	169	163	483.5	108	13	544.5	15	103	135	124	108
C 22 3	**S2**	**M2S**	156	178	170	511.5	119	18	582.5	21	129	146	134	119
C 22 3	**S3**	**M3S**	195	197.5	191.5	555.5	142	23	601.5	28	160	158	160	142
C 22 3	**S3**	**M3L**	195	197.5	191.5	587.5	142	29	678.5	34	160	158	160	142

C 22...P(IEC)

P

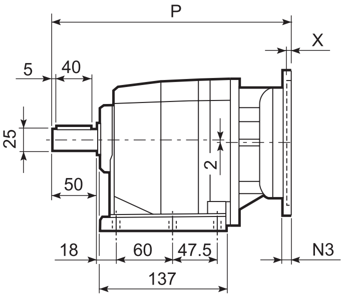
P
X
5
40
25
2
50
18
60
47.5
137
N3

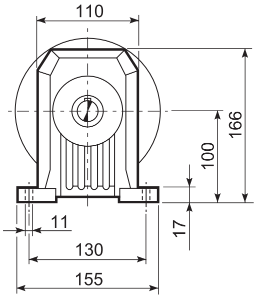
110
166
100
17
11
130
155

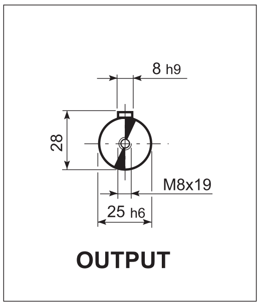
8 h9
28
M8x19
25 h6
OUTPUT

F

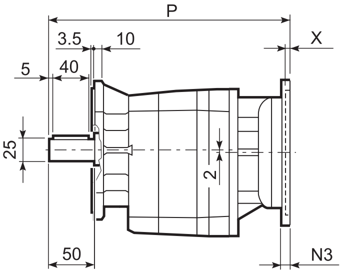
P
3.5
10
X
5
40
25
2
50
N3

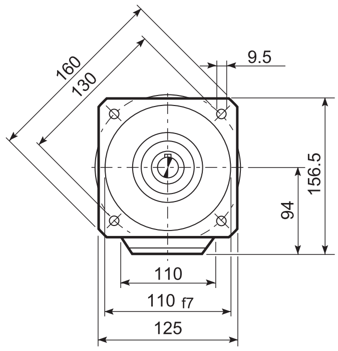
160
130
9.5
156.5
94
110
110 f7
125

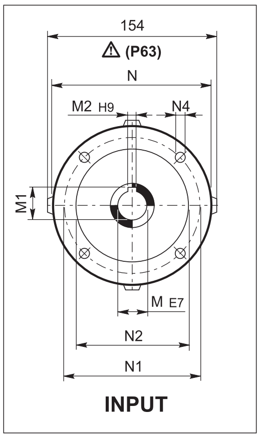
154
⚠ (P63)
N
M2 H9
N4
M1
M E7
N2
N1
INPUT

U

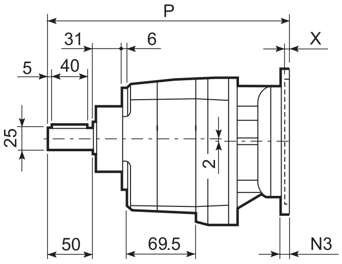
P
31
6
X
5
40
25
2
50
69.5
N3

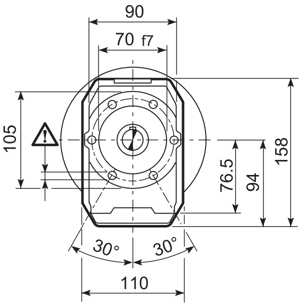
90
70 f7
105
⚠
76.5
94
158
30°
30°
110

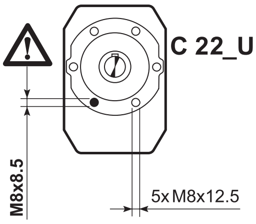
C 22_U
M8x8.5
5x M8x12.5

UF

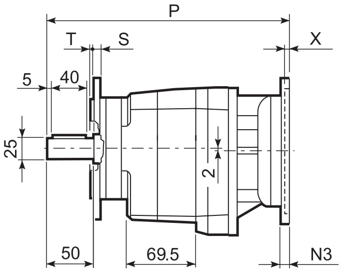
P
T
S
X
5
40
25
2
50
69.5
N3

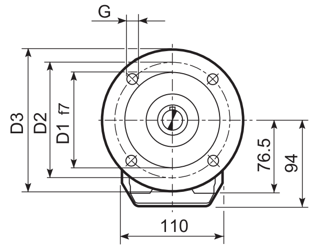
G
D3
D2
D1 f7
76.5
94
110

C 22_U						
	D1	**D2**	**D3**	**G**	**T**	**S**
FA	95	115	140	9	3	10
FB	110	130	160	9	3	10
FC	130	165	200	11	3.5	11

		M	**M1**	**M2**	**N**	**N1**	**N2**	**N3**	**N4**	**X**	**P**	Kg
C 22 2	**P63**	11	12.8	4	140	115	95	—	M8x19	4	273	7
C 22 2	**P71**	14	16.3	5	160	130	110	—	M8x16	4.5	273	7
C 22 2	**P80**	19	21.8	6	200	165	130	—	M10x14.5	4	292.5	8
C 22 2	**P90**	24	27.3	8	200	165	130	—	M10x14.5	4	292.5	8
C 22 2	**P100**	28	31.3	8	250	215	180	—	M12X16	4.5	302.5	12
C 22 2	**P112**	28	31.3	8	250	215	180	—	M12X16	4.5	302.5	12
C 22 3	**P63**	11	12.8	4	140	115	95	—	M8x19	4	328.5	8
C 22 3	**P71**	14	16.3	5	160	130	110	—	M8x16	4.5	328.5	8
C 22 3	**P80**	19	21.8	6	200	165	130	—	M10x14.5	4	348	9
C 22 3	**P90**	24	27.3	8	200	165	130	—	M10x14.5	4	348	9
C 22 3	**P100**	28	31.3	8	250	215	180	—	M12x16	4.5	358	13
C 22 3	**P112**	28	31.3	8	250	215	180	—	M12x16	4.5	358	13

C 22...SK / SC

P

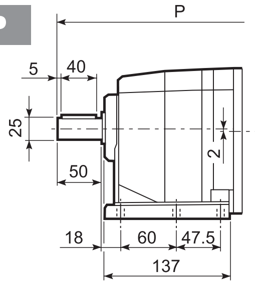

P
5
40
25
2
50
18
60
47.5
137

F

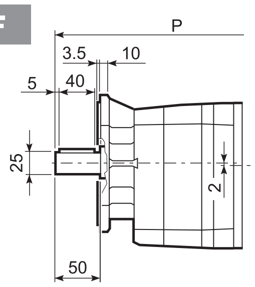

P
3.5
10
5
40
25
2
50

U

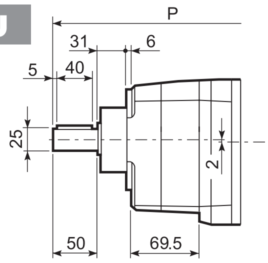

P
31
6
5
40
25
2
50
69.5

UF

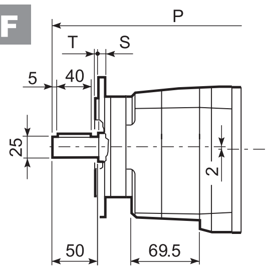

P
T
S
5
40
25
2
50
69.5

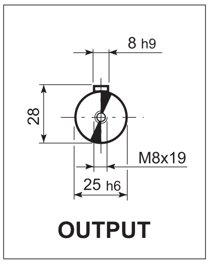

8 h9
28
M8x19
25 h6
OUTPUT

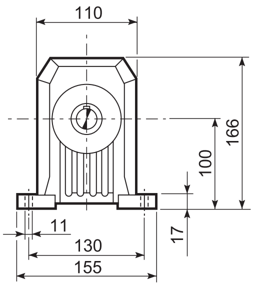

110
166
100
17
11
130
155

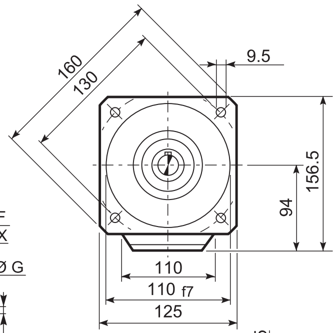

160
130
9.5
156.5
94
110
110 f7
125

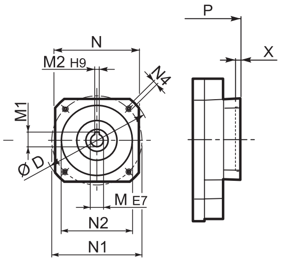

P
N
M2 H9
X
N4
M1
Ø D
M E7
N2
N1

SK...

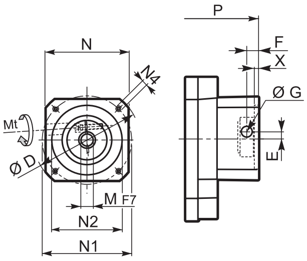

P
N
F
X
N4
Ø G
Mt
Ø D
E
M F7
N2
N1

SC...

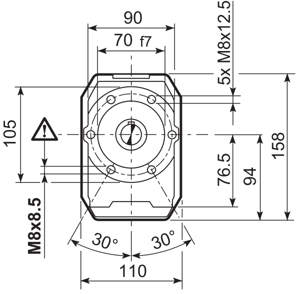

90
70 f7
5x M8x12.5
105
158
76.5
94
M8x8.5
30°
30°
110

C 22_U						
	D1	**D2**	**D3**	**G**	**T**	**S**
FA	95	115	140	9	3	10
FB	110	130	160	9	3	10
FC	130	165	200	11	3.5	11

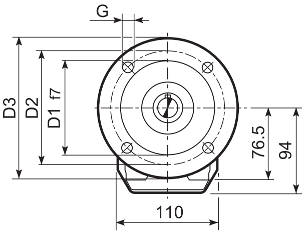

G
D3
D2
D1 f7
76.5
94
110

		D	**M**	**M1**	**M2**	**N**	**N1**	**N2**	**N4**	**X**	**P**		Kg
											2x	**3x**	
C 22 2/3	**SK60A***	102	11	12.8	4	82	75	60	M5x10	3.5	224.5	300	6/9
C 22 2/3	**SK60B***	102	14	16.3	5	82	75	60	M5x10	4	251.5	307	7/8
C 22 2/3	**SK80A***	115	14	16.3	5	90	100	80	M6x12	4	251.5	307	7/8
C 22 2/3	**SK80C**	120	19	21.8	6	96	100	80	M6x12	4	292.5	348	8/9
C 22 2/3	**SK95A**	130	14	16.3	5	102	115	95	M8x12	4	292.5	348	8/9
C 22 2/3	**SK95B**	130	19	21.8	6	102	115	95	M8x12	4	292.5	348	8/9
C 22 2/3	**SK95C**	130	24	27.3	8	102	115	95	M8x12	4	292.5	348	8/9
C 22 2/3	**SK110A**	150	19	21.8	6	120	130	110	M8x12	5	292.5	348	8/9
C 22 2/3	**SK110B**	150	24	27.3	8	120	130	110	M8x12	5	292.5	348	8/9

			Mt [Nm]	**D**	**E**	**F**	**G**	**M**	**N**	**N1**	**N2**	**N4**	**X**	**P**		Kg
														2x	**3x**	
C 22 2/3	**SC60A***	M6	15	102	7	12.5	12.5	11	82	75	60	M5x10	4	271.5	327	7/8
C 22 2/3	**SC60B***	M6	15	102	7	12.5	12.5	14	82	75	60	M5x10	4	271.5	327	8/9
C 22 2/3	**SC80A***	M6	15	115	6	12.5	12.5	14	90	100	80	M6x12	4	271.5	327	8/9
C 22 2/3	**SC80C**	M6	15	120	15.5	14.5	17.75	19	96	100	80	M6x12	4	316	371.5	9/10
C 22 2/3	**SC95A**	M6	15	130	16.5	15	17.75	14	102	115	95	M8x16	4	316	371.5	9/10
C 22 2/3	**SC95B**	M6	15	130	16.5	15	17.75	19	102	115	95	M8x16	4	316	371.5	9/10
C 22 2/3	**SC95C**	M6	15	130	16.5	15	17.75	24	102	115	95	M8x16	4	316	371.5	9/10
C 22 2/3	**SC110A**	M6	15	150	16.5	16	17.75	19	120	130	110	M8x16	5	316	371.5	10/11
C 22 2/3	**SC110B**	M6	15	150	16.5	16	17.75	24	120	130	110	M8x16	5	316	371.5	10/11

* Nehmen Sie bitte Kontakt mit unserem technischen Service auf und geben die Anwendung an.

C 22...HS

P

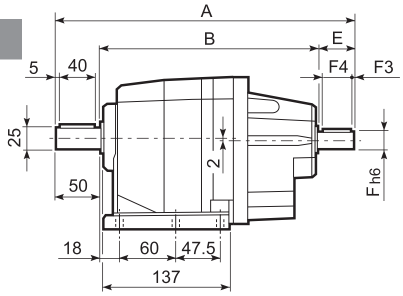
A
B
E
5
40
F4
F3
25
2
F h6
50
18
60
47.5
137

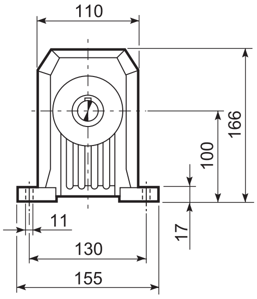
110
166
100
11
17
130
155

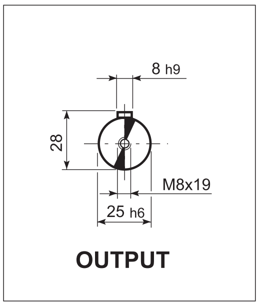
8 h9
28
M8x19
25 h6
OUTPUT

F

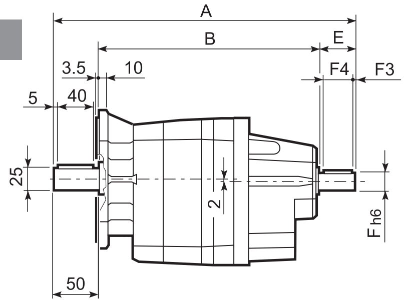
A
B
E
3.5
10
F4
F3
5
40
25
2
F h6
50

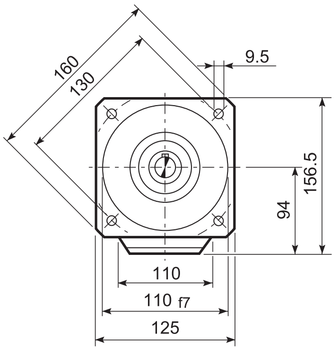
160
130
9.5
156.5
94
110
110 f7
125

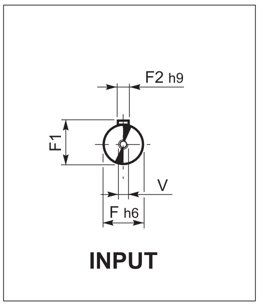
F2 h9
F1
V
F h6
INPUT

U

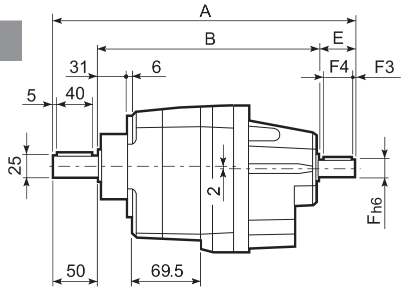
A
B
E
31
6
F4
F3
5
40
25
2
F h6
50
69.5

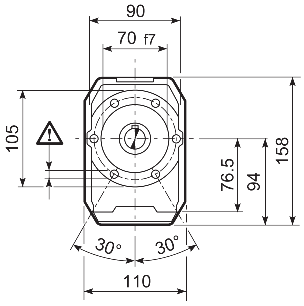
90
70 f7
105
76.5
94
158
30°
30°
110

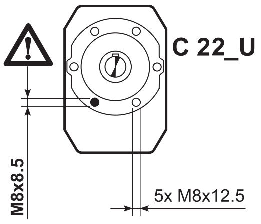
C 22_U
M8x8.5
5x M8x12.5

UF

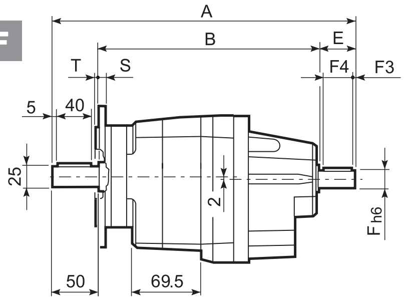
A
B
E
T
S
F4
F3
5
40
25
2
F h6
50
69.5

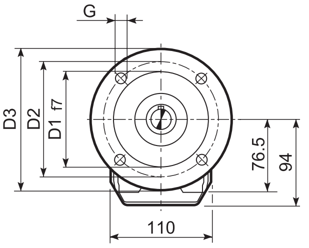
G
D3
D2
D1 f7
76.5
94
110

C 22_U	D1	D2	D3	G	T	S
FA	95	115	140	9	3	10
FB	110	130	160	9	3	10
FC	130	165	200	11	3.5	11

		A	B	E	F	F1	F2	F3	F4	V	Kg
C 22 2	**HS**	323	233	40	19	21.5	6	2.5	35	M6x16	7.2
C 22 3		335.5	245.5	40	16	18	6	2.5	36	M6x16	7.5

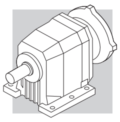

C 32...M

P

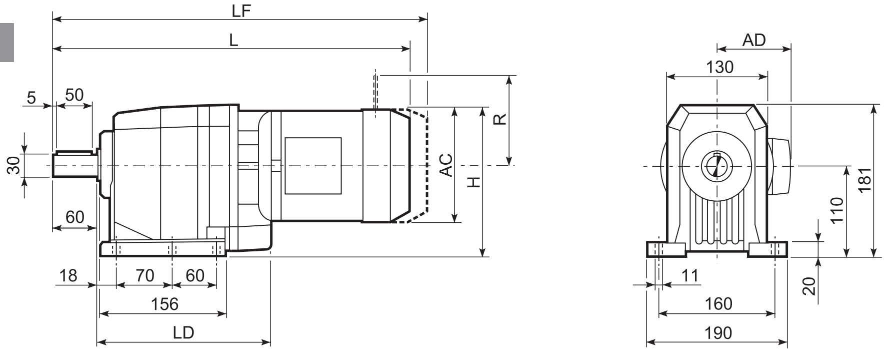

LF
L
5
50
30
60
18
70
60
156
LD
AC
H
R
AD
130
181
110
11
20
160
190

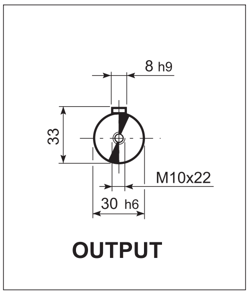

8 h9
33
M10x22
30 h6
OUTPUT

F

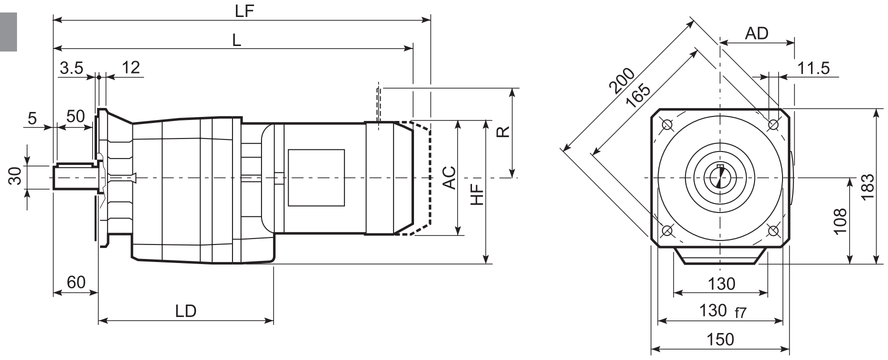

LF
L
3.5
12
5
50
30
60
LD
AC
HF
H
R
AD
11.5
200
165
183
108
130
130 f7
150

U

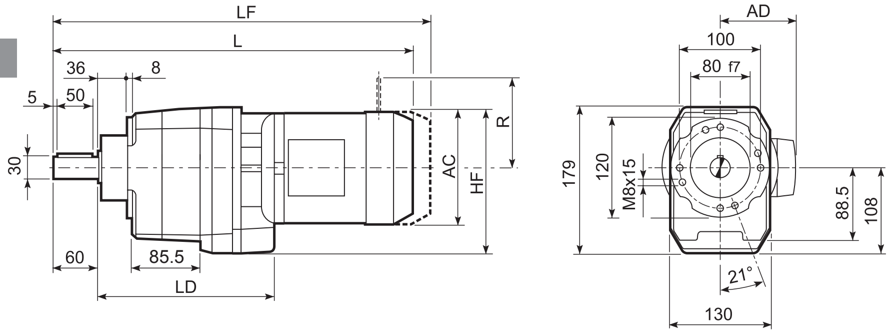

LF
L
36
8
5
50
30
60
85.5
LD
AC
HF
R
AD
100
80 f7
179
120
M8x15
88.5
108
21°
130

UF

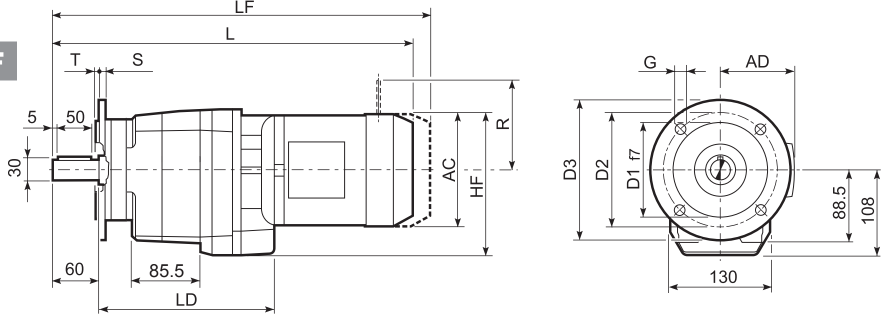

LF
L
T
S
5
50
30
60
85.5
LD
AC
HF
R
G
AD
D3
D2
D1 f7
88.5
108
130

C 32_U	D1	D2	D3	G	T	S
FA	110	130	160	9	3	10
FB	130	165	200	11	3.5	11
FC	180	215	250	14	4	13

										M...FD M...FA		M...FD		M...FA	
			AC	H	HF	L	LD	AD	Kg	LF	Kg	R	AD	R	AD
C 32 2	**S1**	**M1**	138	179	177	462.5	205.5	108	14	523.5	16	103	135	124	108
C 32 2	**S2**	**M2S**	156	188	186	490.5	217.5	119	18	561.5	21	129	146	134	119
C 32 2	**S3**	**M3S**	195	207.5	205.5	534.5	227.5	142	23	630.5	28	160	158	160	142
C 32 2	**S3**	**M3L**	195	207.5	205.5	566.5	227.5	142	32	657.5	37	160	158	160	142
C 32 2	**S4**	**M4**	258	239	237	674.5	—	193	66	738.5	82	226	210	217	193
C 32 2	**S4**	**M4LC**	258	239	237	709.5	—	193	74	763.5	90	226	210	217	193
C 32 3	**S05**	**M05**	121	170.5	168.5	491	—	95	13	557	15	96	122	116	95
C 32 3	**S1**	**M1**	138	179	177	520	—	108	15	581	17	103	135	124	108
C 32 3	**S2**	**M2S**	156	188	186	548	—	119	18	619	21	129	146	134	119
C 32 3	**S3**	**M3S**	195	207.5	205.5	592	—	142	24	688	29	160	158	160	142
C 32 3	**S3**	**M3L**	195	207.5	205.5	624	—	142	33	715	38	160	158	160	142

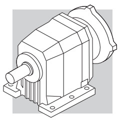

C 32...P(IEC)

P

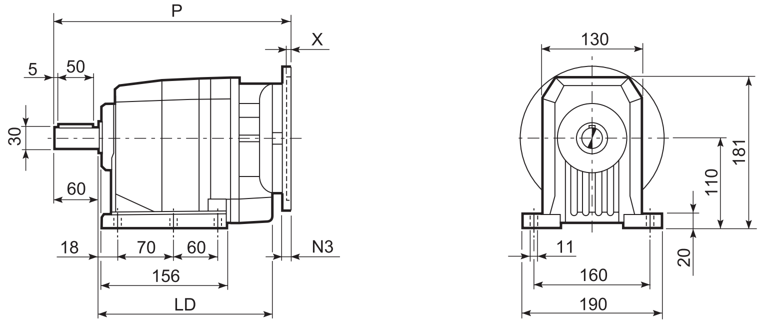
P
X
5
50
30
60
18
70
60
156
LD
N3
130
181
110
11
160
190
20

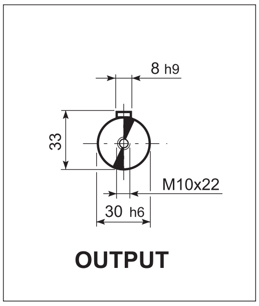
8 h9
33
M10x22
30 h6

OUTPUT

F

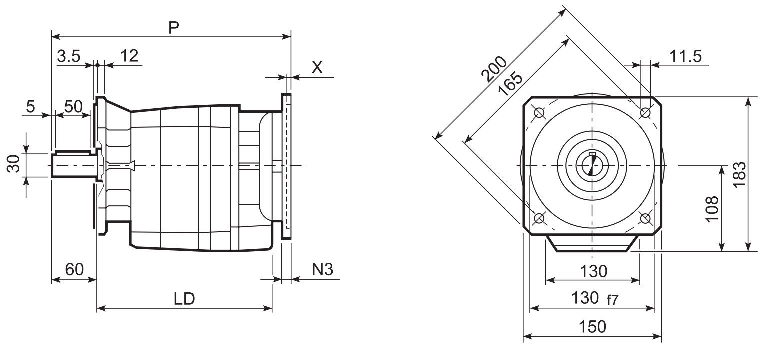
P
3.5
12
X
5
50
30
60
LD
N3
200
165
11.5
183
108
130
130 f7
150

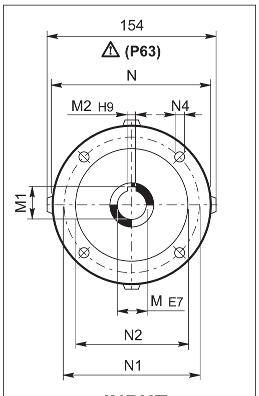
154
⚠ (P63)
N
M2 H9
N4
M1
M E7
N2
N1

INPUT

U

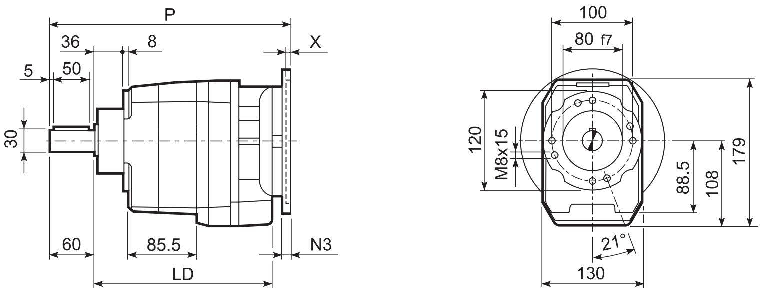
P
36
8
X
5
50
30
60
85.5
LD
N3
100
80 f7
120
M8x15
88.5
108
179
21°
130

UF

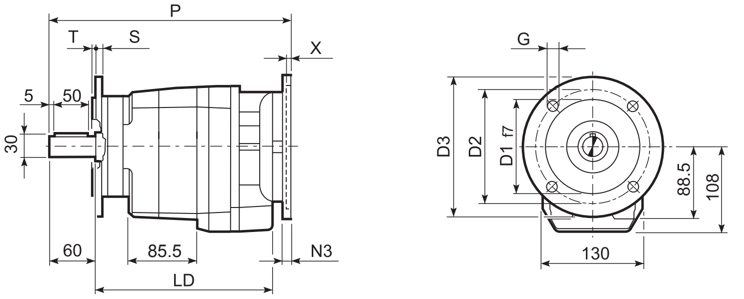
P
T
S
X
5
50
30
60
85.5
LD
N3
G
D3
D2
D1 f7
88.5
108
130

C 32_U	D1	D2	D3	G	T	S
FA	110	130	160	9	3	10
FB	130	165	200	11	3.5	11
FC	180	215	250	14	4	13

		LD	M	M1	M2	N	N1	N2	N3	N4	X	P	Kg
C 32 2	**P63**	217.5	11	12.8	4	140	115	95	—	M8x19	4	307.5	9
C 32 2	**P71**	217.5	14	16.3	5	160	130	110	—	M8x16	4.5	307.5	9
C 32 2	**P80**	227.5	19	21.8	6	200	165	130	—	M10x14.5	4	327	10
C 32 2	**P90**	227.5	24	27.3	8	200	165	130	—	M10x14.5	4	327	10
C 32 2	**P100**	227.5	28	31.3	8	250	215	180	—	M12x16	4.5	337	14
C 32 2	**P112**	227.5	28	31.3	8	250	215	180	—	M12x16	4.5	337	14
C 32 2	**P132**	—	38	41.3	10	300	265	230	16	14	5	373	17
C 32 3	**P63**	—	11	12.8	4	140	115	95	—	M8x19	4	365	10
C 32 3	**P71**	—	14	16.3	5	160	130	110	—	M8x16	4.5	365	10
C 32 3	**P80**	—	19	21.8	6	200	165	130	—	M10x14.5	4	384.5	11
C 32 3	**P90**	—	24	27.3	8	200	165	130	—	M10x14.5	4	384.5	11
C 32 3	**P100**	—	28	31.3	8	250	215	180	—	M12x16	4.5	394.5	15
C 32 3	**P112**	—	28	31.3	8	250	215	180	—	M12x16	4.5	394.5	15

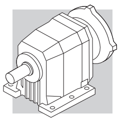

C 32...SK / SC

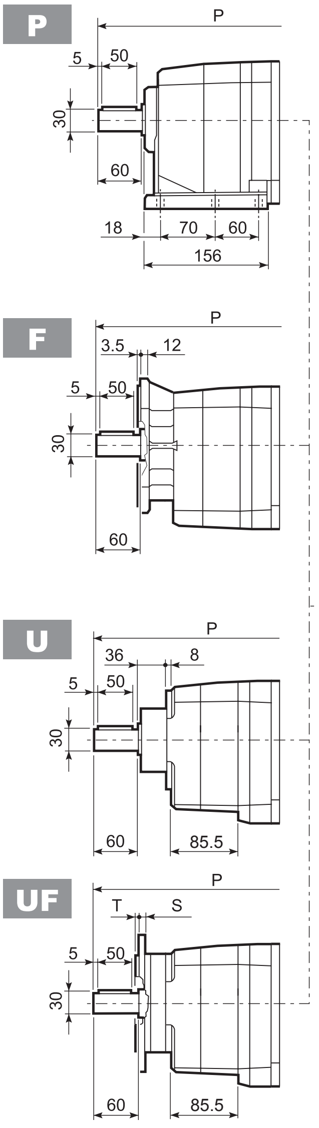
P
P
5
50
30
60
18
70
60
156
F
P
3.5
12
5
50
30
60
U
P
36
8
5
50
30
60
85.5
UF
P
T
S
5
50
30
60
85.5

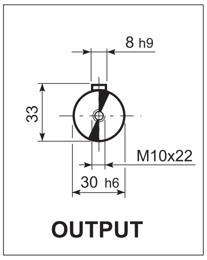
8 h9
33
M10x22
30 h6
OUTPUT

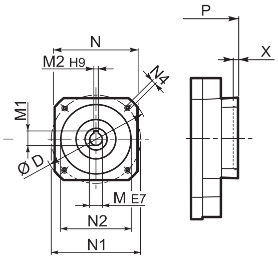
P
X
N
M2 H9
N4
M1
Ø D
M E7
N2
N1

SK...

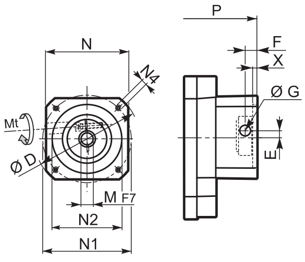
P
F
X
N
N4
Ø G
Mt
E
Ø D
M F7
N2
N1

SC...

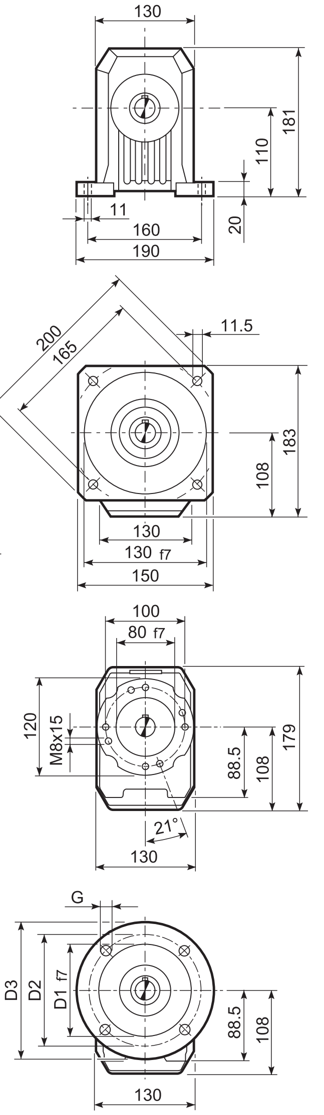
130
181
110
11
160
190
20
200
165
11.5
183
108
130
130 f7
150
100
80 f7
120
M8x15
88.5
108
179
21°
130
G
D3
D2
D1 f7
88.5
108
130

C 32_U						
	D1	D2	D3	G	T	S
FA	110	130	160	9	3	10
FB	130	165	200	11	3.5	11
FC	180	215	250	14	4	13

		D	M	M1	M2	N	N1	N2	N4	X	P 2x	 3x	Kg
C 32 2/3	**SK60A**	102	11	12.8	4	82	75	60	M5x10	3.5	279	336.5	8/9
C 32 2/3	**SK60B**	102	14	16.3	5	82	75	60	M5x10	4	286	343.5	9/10
C 32 2/3	**SK80A**	115	14	16.3	5	90	100	80	M6x12	4	286	343.5	9/10
C 32 2/3	**SK80C**	120	19	21.8	6	96	100	80	M6x12	4	327	384.5	10/11
C 32 2/3	**SK95A**	130	14	16.3	5	102	115	95	M8x12	4	327	384.5	10/11
C 32 2/3	**SK95B**	130	19	21.8	6	102	115	95	M8x12	4	327	384.5	10/11
C 32 2/3	**SK95C**	130	24	27.3	8	102	115	95	M8x12	4	327	384.5	10/11
C 32 2/3	**SK110A**	150	19	21.8	6	120	130	110	M8x12	5	327	384.5	10/11
C 32 2/3	**SK110B**	150	24	27.3	8	120	130	110	M8x12	5	327	384.5	10/11
C 32 2	**SK130A**	188	24	27.3	8	142	165	130	M10x20	5	327	—	11

			Mt [Nm]	D	E	F	G	M	N	N1	N2	N4	X	P 2x	 3x	Kg
C 32 2/3	**SC60A**	M6	15	102	7	12.5	12.5	11	82	75	60	M5x10	4	306	363.5	9/10
C 32 2/3	**SC60B**	M6	15	102	7	12.5	12.5	14	82	75	60	M5x10	4	306	363.5	10/11
C 32 2/3	**SC80A**	M6	15	115	6	12.5	12.5	14	90	100	80	M6x12	4	306	363.5	10/11
C 32 2/3	**SC80C**	M6	15	120	15.5	14.5	17.75	19	96	100	80	M6x12	4	350.5	408	11/12
C 32 2/3	**SC95A**	M6	15	130	16.5	15	17.75	14	102	115	95	M8x16	4	350.5	408	11/12
C 32 2/3	**SC95B**	M6	15	130	16.5	15	17.75	19	102	115	95	M8x16	4	350.5	408	11/12
C 32 2/3	**SC95C**	M6	15	130	16.5	15	17.75	24	102	115	95	M8x16	4	350.5	408	11/12
C 32 2/3	**SC 110A**	M6	15	150	16.5	16	17.75	19	120	130	110	M8x16	5	350.5	408	12/13
C 32 2/3	**SC 110B**	M6	15	150	16.5	16	17.75	24	120	130	110	M8x16	5	350.5	408	12/13
C 32 2	**SC 130A**	M6	15	188	19	16	17.75	24	142	165	130	M10x20	5	350.5	—	13

C 32...HS

P

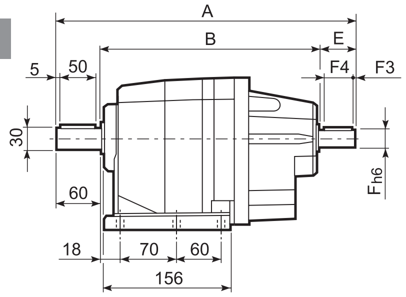
A
B
E
5
50
F4
F3
30
Fh6
60
18
70
60
156

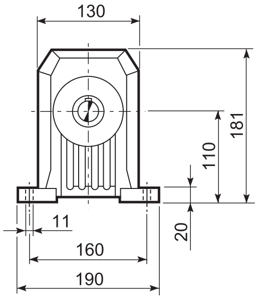
130
181
110
11
160
190
20

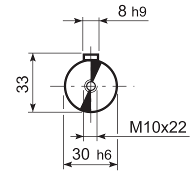
8 h9
33
M10x22
30 h6

OUTPUT

F

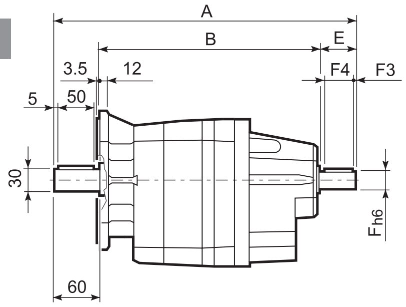
A
B
E
3.5
12
F4
F3
5
50
30
Fh6
60

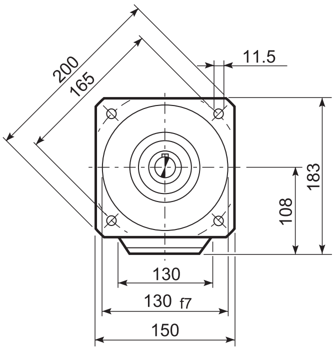
200
165
11.5
183
108
130
130 f7
150

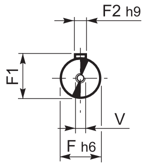
F2 h9
F1
V
F h6

INPUT

U

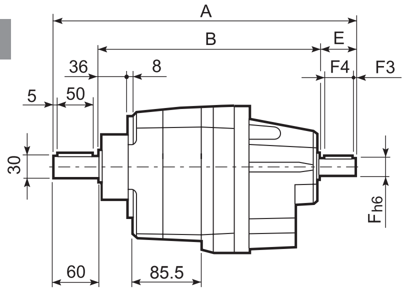
A
B
E
36
8
F4
F3
5
50
30
Fh6
60
85.5

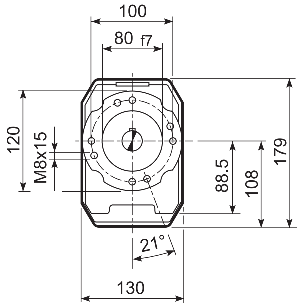
100
80 f7
120
M8x15
88.5
108
179
21°
130

UF

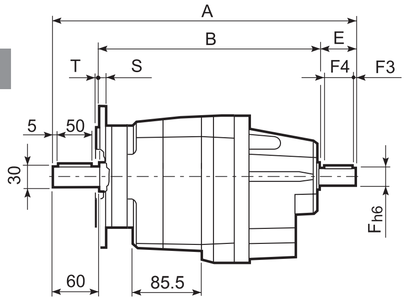
A
B
E
T
S
F4
F3
5
50
30
Fh6
60
85.5

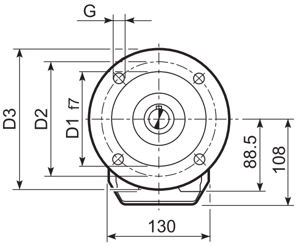
G
D3
D2
D1 f7
88.5
108
130

C 32_U

	D1	D2	D3	G	T	S
FA	110	130	160	9	3	10
FB	130	165	200	11	3.5	11
FC	180	215	250	14	4	13

		A	B	E	F	F1	F2	F3	F4	V	Kg
C 32 2	**HS**	357.5	257.5	40	19	21.5	6	2.5	35	M6x16	11.1
C 32 3		372	272	40	16	18	5	2.5	35	M6x16	10.6

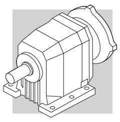

C 36...M

P

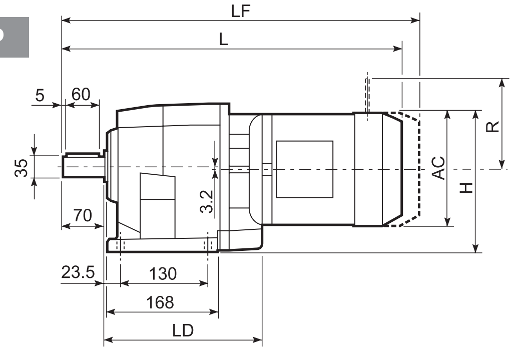
LF
L
5
60
35
70
3.2
AC
H
R
23.5
130
168
LD

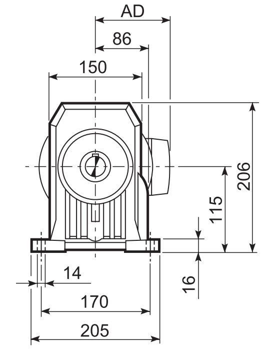
AD
86
150
206
115
16
14
170
205

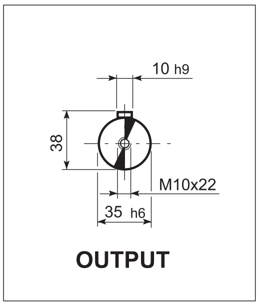
10 h9
38
M10x22
35 h6
OUTPUT

U

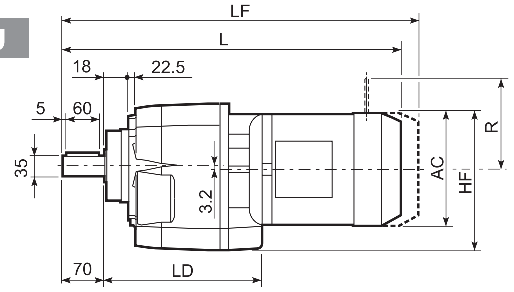
LF
L
18
22.5
5
60
35
3.2
AC
HF
R
70
LD

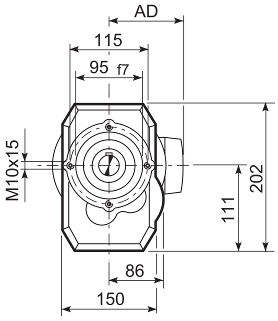
AD
115
95 f7
M10x15
202
111
86
150

UF

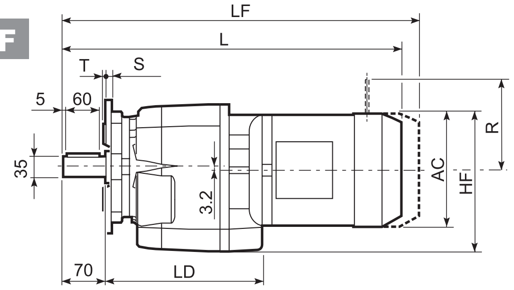
LF
L
T
S
5
60
35
3.2
AC
HF
R
70
LD

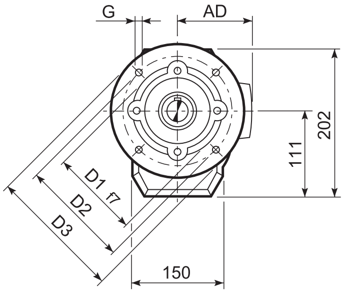
G
AD
202
111
D1 f7
D2
D3
150

C 36_U	D1	D2	D3	G	T	S
FA	130	165	200	11	3.5	11
FB	180	215	250	14	4	14

										M...FD M...FA		M...FD		M...FA	
			AC	**H**	**HF**	**L**	**LD**	**AD**	Kg	**LF**	Kg	**R**	**AD**	**R**	**AD**
C 36 2/3	**S1**	**M1**	138	184	177	481	214	108	20	542	21	103	135	124	108
C 36 2/3	**S2**	**M2S**	156	193	186	509	226	119	23	580	27	129	146	134	119
C 36 2/3	**S3**	**M3S**	195	212.5	205.5	553	236	142	28	649	33	160	158	160	142
C 36 2/3	**S3**	**M3L**	195	212.5	205.5	585	236	142	37	676	42	160	158	160	142
C 36 2/3	**S4**	**M4**	258	244	240	693.5	—	193	71	802.5	87	226	210	217	193
C 36 2/3	**S4**	**M4LC**	258	244	240	728.5	—	193	79	827.5	95	226	210	217	193
C 36 4	**S05**	**M05**	121	175.5	168.5	509.5	—	95	19	575.5	20	96	122	116	95
C 36 4	**S1**	**M1**	138	184	177	538.5	—	108	21	599.5	22	103	135	124	108
C 36 4	**S2**	**M2S**	156	193	186	566.5	—	119	24	637.5	28	129	146	134	119
C 36 4	**S3**	**M3S**	195	212.5	205.5	610.5	—	142	29	706.5	34	160	158	160	142
C 36 4	**S3**	**M3L**	195	212.5	205.5	642.5	—	142	38	733.5	43	160	158	160	142

C 36...P(IEC)

P

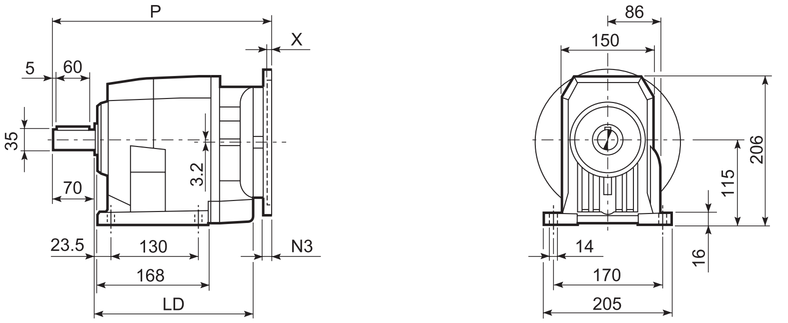
P
X
5
60
35
3.2
70
23.5
130
168
LD
N3
86
150
206
115
14
170
205
16

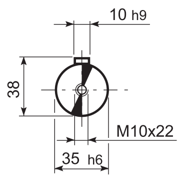
10 h9
38
M10x22
35 h6

OUTPUT

U

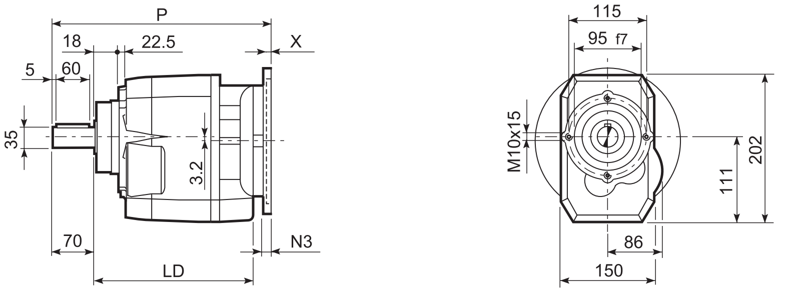
P
18
22.5
X
5
60
35
3.2
70
LD
N3
115
95 f7
M10x15
202
111
86
150

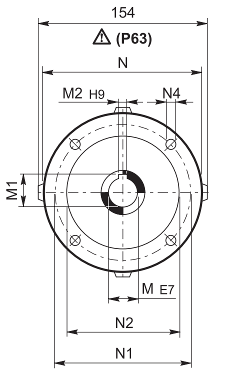
154
⚠ (P63)
N
M2 H9
N4
M1
M E7
N2
N1

INPUT

UF

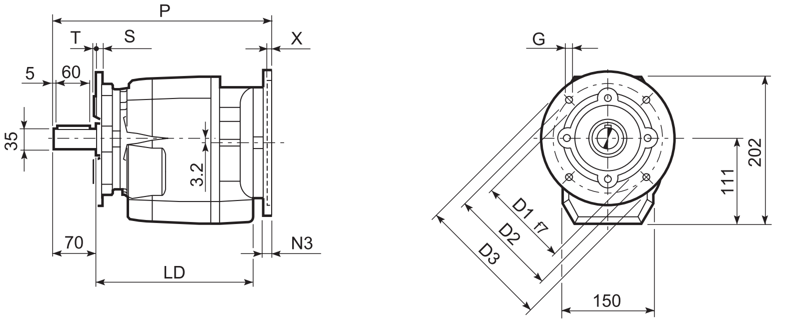
P
T
S
X
5
60
35
3.2
70
LD
N3
G
D1 f7
D2
D3
202
111
150

C 36_U						
	D1	D2	D3	G	T	S
FA	130	165	200	11	3.5	11
FB	180	215	250	14	4	14

		LD	M	M1	M2	N	N1	N2	N3	N4	X	P	Kg
C 36 2/3	**P63**	226	11	12.8	4	140	115	95	—	M8x19	4	326	17
C 36 2/3	**P71**	226	14	16.3	5	160	130	110	—	M8x16	4.5	326	17
C 36 2/3	**P80**	236	19	21.8	6	200	165	130	—	M10x14.5	4	345.5	18
C 36 2/3	**P90**	236	24	27.3	8	200	165	130	—	M10x14.5	4	345.5	18
C 36 2/3	**P100**	236	28	31.3	8	250	215	180	—	M12x16	4.5	355.5	22
C 36 2/3	**P112**	236	28	31.3	8	250	215	180	—	M12x16	4.5	355.5	22
C 36 2/3	**P132**	—	38	41.3	10	300	265	230	16	14	5	392.5	25
C 36 4	**P63**	—	11	12.8	4	140	115	95	—	M8x19	4	383.5	20
C 36 4	**P71**	—	14	16.3	5	160	130	110	—	M8x16	4.5	383.5	20
C 36 4	**P80**	—	19	21.8	6	200	165	130	—	M10x14.5	4	403	21
C 36 4	**P90**	—	24	27.3	8	200	165	130	—	M10x14.5	4	403	21
C 36 4	**P100**	—	28	31.3	8	250	215	180	—	M12x16	4.5	413	25
C 36 4	**P112**	—	28	31.3	8	250	215	180	—	M12x16	4.5	413	25

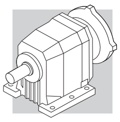

C 36...SK / SC

P

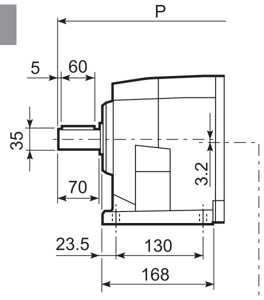
P
5
60
35
70
3.2
23.5
130
168

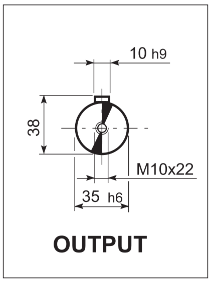
10 h9
38
M10x22
35 h6

OUTPUT

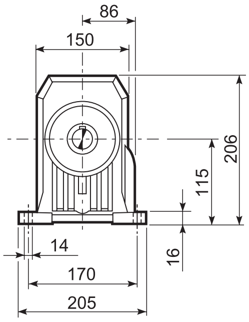
86
150
206
115
16
14
170
205

U

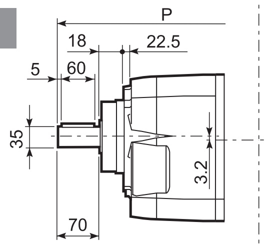
P
18
22.5
5
60
35
3.2
70

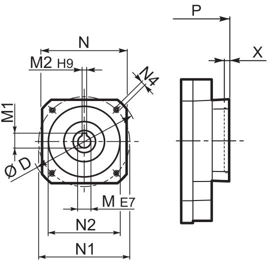
N
P
M2 H9
N4
X
M1
Ø D
M E7
N2
N1

SK...

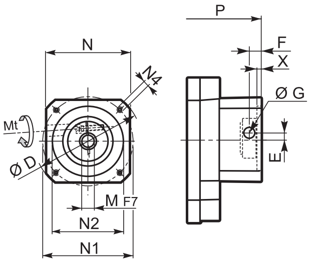
N
P
F
X
N4
Ø G
Mt
Ø D
E
M F7
N2
N1

SC...

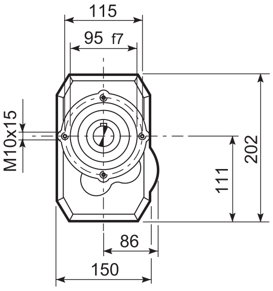
115
95 f7
M10x15
202
111
86
150

UF

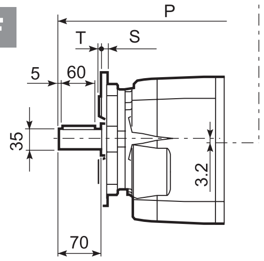
P
T
S
5
60
35
3.2
70

	D1	D2	D3	G	T	S
FA	130	165	200	11	3.5	11
FB	180	215	250	14	4	14

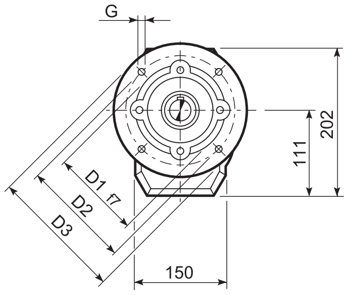
G
202
111
D1 f7
D2
D3
150

		D	M	M1	M2	N	N1	N2	N4	X	P 2/3x	P 4x	Kg
C 36 2/3/4	SK60A	102	11	12.8	4	82	75	60	M5x10	3.5	297.5	355	16/16/19
C 36 2/3/4	SK60B	102	14	16.3	5	82	75	60	M5x10	4	304.5	362	17/17/20
C 36 2/3/4	SK80A	115	14	16.3	5	90	100	80	M6x12	4	304.5	362	18/18/21
C 36 2/3/4	SK80C	120	19	21.8	6	96	100	80	M6x12	4	304.5	403	18/18/21
C 36 2/3/4	SK95A	130	14	16.3	5	102	115	95	M8x12	4	345.5	403	18/18/21
C 36 2/3/4	SK95B	130	19	21.8	6	102	115	95	M8x12	4	345.5	403	18/18/21
C 36 2/3/4	SK95C	130	24	27.3	8	102	115	95	M8x12	4	345.5	403	18/18/21
C 36 2/3/4	SK110A	150	19	21.8	6	120	130	110	M8x12	5	345.5	403	18/18/21
C 36 2/3/4	SK110B	150	24	27.3	8	120	130	110	M8x12	5	345.5	403	18/18/21
C 36 2/3	SK130A	188	24	27.3	8	142	165	130	M10x20	5	345.5	—	19/19

			Mt [Nm]	D	E	F	G	M	N	N1	N2	N4	X	P 2/3x	P 4x	Kg
C 36 2/3/4	SC60A	M6	15	102	7	12.5	12.5	11	82	75	60	M5x10	4	324.5	382	17/17/20
C 36 2/3/4	SC60B	M6	15	102	7	12.5	12.5	14	82	75	60	M5x10	4	324.5	382	18/18/21
C 36 2/3/4	SC80A	M6	15	115	6	12.5	12.5	14	90	100	80	M6x12	4	324.5	426.5	18/18/21
C 36 2/3/4	SC80C	M6	15	120	15.5	14.5	17.75	19	96	100	80	M6x12	4	369	426.5	19/19/22
C 36 2/3/4	SC95A	M6	15	130	16.5	15	17.75	14	102	115	95	M8x16	4	369	426.5	19/19/22
C 36 2/3/4	SC95B	M6	15	130	16.5	15	17.75	19	102	115	95	M8x16	4	369	426.5	19/19/22
C 36 2/3/4	SC95C	M6	15	130	16.5	15	17.75	24	102	115	95	M8x16	4	369	426.5	19/19/22
C 36 2/3/4	SC110A	M6	15	150	16.5	16	17.75	19	120	130	110	M8x16	5	369	426.5	21/21/24
C 36 2/3/4	SC110B	M6	15	150	16.5	16	17.75	24	120	130	110	M8x16	5	369	426.5	21/21/24
C 36 2/3	SC130A	M6	15	188	19	16	17.75	24	142	165	130	M10x20	5	369	—	22/22

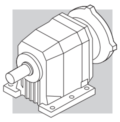

C 36...HS

P

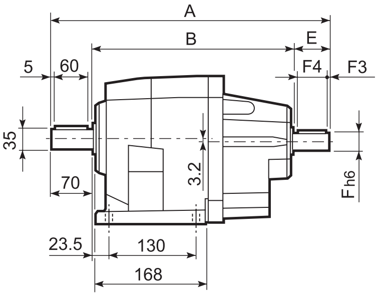
A
B
E
5
60
F4
F3
35
3.2
70
Fh6
23.5
130
168

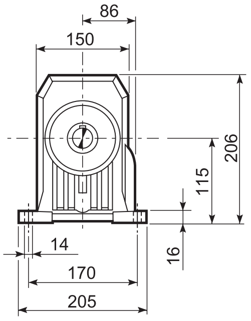
86
150
206
115
14
16
170
205

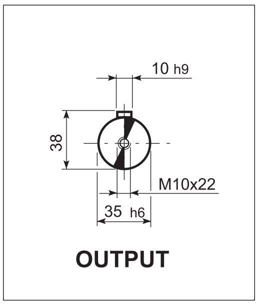
10 h9
38
M10x22
35 h6
OUTPUT

U

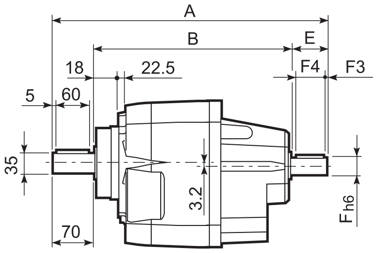
A
B
E
18
22.5
F4
F3
5
60
35
3.2
Fh6
70

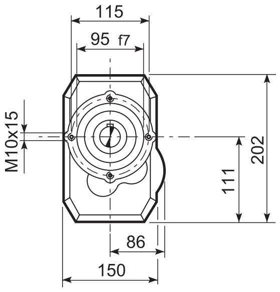
115
95 f7
M10x15
202
111
86
150

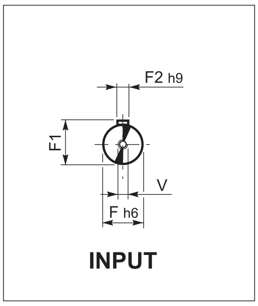
F2 h9
F1
V
F h6
INPUT

UF

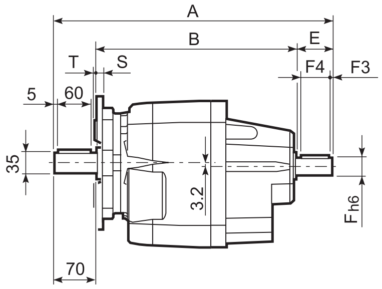
A
B
E
T
S
F4
F3
5
60
35
3.2
Fh6
70

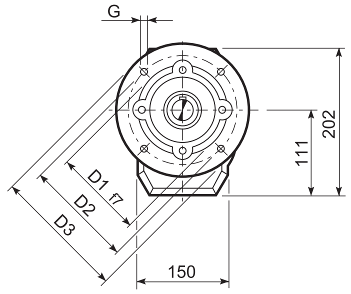
G
D1 f7
D2
D3
202
111
150

C 36_U						
	D1	**D2**	**D3**	**G**	**T**	**S**
FA	130	165	200	11	3.5	11
FB	180	215	250	14	4	14

		A	**B**	**E**	**F**	**F1**	**F2**	**F3**	**F4**	**V**	Kg
C 36 2	**HS**	415.5	295.5	50	24	27	8	2.5	45	M8x19	25.5
C 36 3		415.5	295.5	50	24	27	8	2.5	45	M8x19	25.5
C 36 4		390.5	280.5	40	16	18	5	2.5	36	M6x16	26.5

C 41...M

P

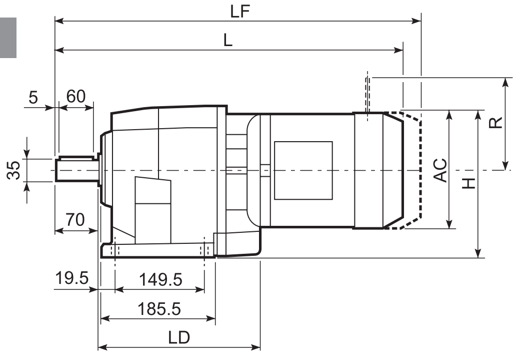
LF
L
5
60
35
70
19.5
149.5
185.5
LD
AC
H
R

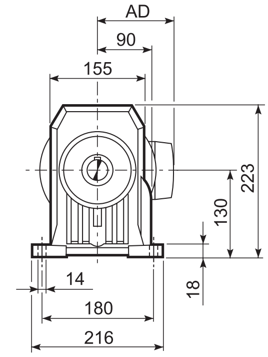
AD
90
155
223
130
18
14
180
216

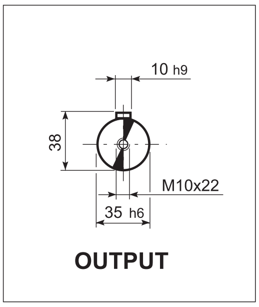
10 h9
38
M10x22
35 h6
OUTPUT

U

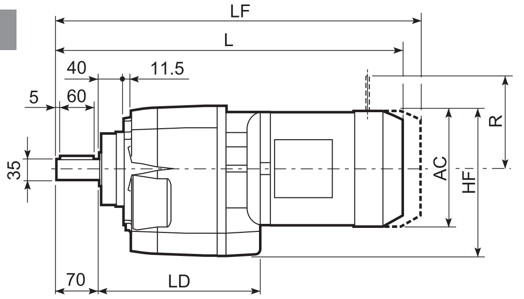
LF
L
40
11.5
5
60
35
70
LD
AC
HF
R

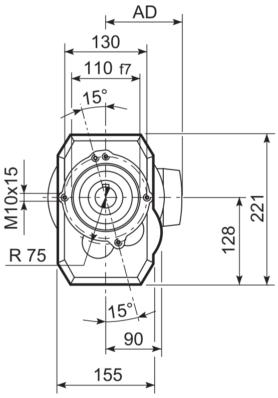
AD
130
110 f7
15°
M10x15
R 75
221
128
15°
90
155

UF

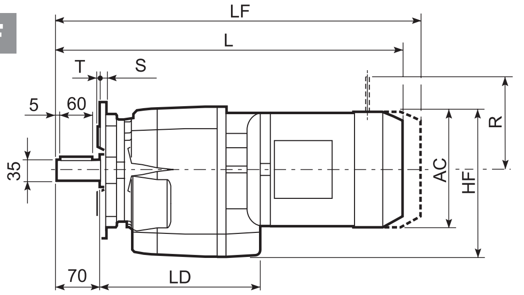
LF
L
T
S
5
60
35
70
LD
AC
HF
R

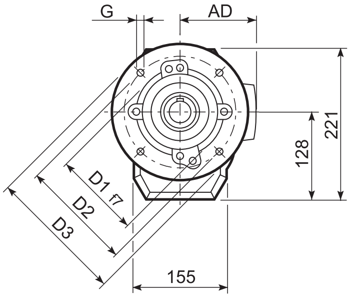
G
AD
221
128
D1 f7
D2
D3
155

C 41_U						
	D1	D2	D3	G	T	S
FA	130	165	200	11	3.5	11
FB	180	215	250	14	4	13

										M...FD M...FA		M...FD		M...FA	
			AC	H	HF	L	LD	AD	Kg	LF	Kg	R	AD	R	AD
C 41 2/3	S1	M1	138	199	197	491.5	220	108	25	552.5	28	103	135	124	108
C 41 2/3	S2	M2S	156	208	206	519.5	235.5	119	31	590.5	34	129	146	134	119
C 41 2/3	S3	M3S	195	227.5	225.5	563.5	251.5	142	36	659.5	41	160	158	160	142
C 41 2/3	S3	M3L	195	227.5	225.5	595.5	251.5	142	45	686.5	50	160	158	160	142
C 41 2/3	S4	M4	258	259	257	703.5	—	193	71	812.5	83	226	210	217	193
C 41 2/3	S4	M4LC	258	259	257	739	—	193	78	838	91	226	210	217	193
C 41 4	S05	M05	231	245.5	243.5	524	—	95	27	590	28	96	122	116	95
C 41 4	S1	M1	138	199	197	553	—	108	28	614	31	103	135	124	108
C 41 4	S2	M2S	156	208	206	581	—	119	34	652	37	129	146	134	119
C 41 4	S3	M3S	195	227.5	225.5	625	—	142	39	721	44	160	158	160	142
C 41 4	S3	M3L	195	227.5	225.5	657	—	142	48	748	53	160	158	160	142

C 41...P(IEC)

P

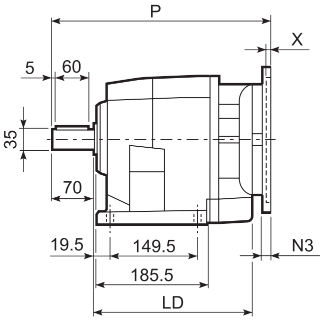
P
X
5
60
35
70
19.5
149.5
185.5
LD
N3

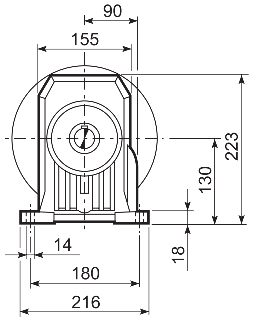
90
155
223
130
18
14
180
216

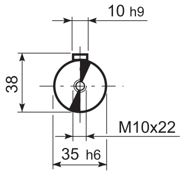
10 h9
38
M10x22
35 h6

OUTPUT

U

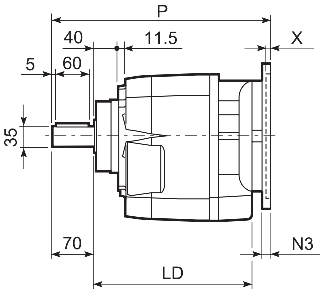
P
40
11.5
X
5
60
35
70
LD
N3

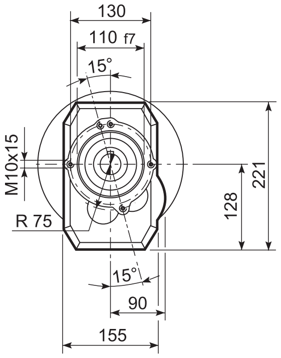
130
110 f7
15°
M10x15
R 75
221
128
15°
90
155

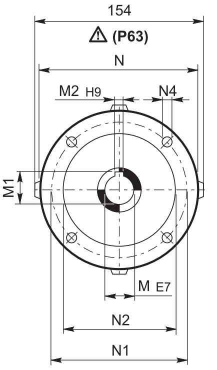
154
⚠ (P63)
N
M2 H9
N4
M1
M E7
N2
N1

INPUT

UF

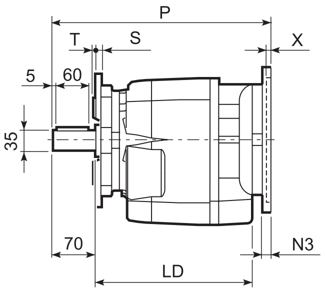
P
T
S
X
5
60
35
70
LD
N3

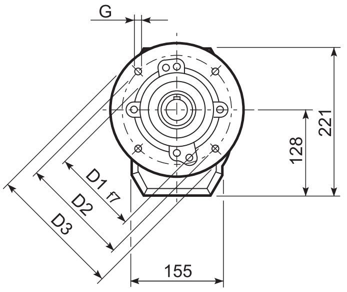
G
221
128
D1 f7
D2
D3
155

C 41_U						
	D1	D2	D3	G	T	S
FA	130	165	200	11	3.5	11
FB	180	215	250	14	4	13

		LD	M	M1	M2	N	N1	N2	N3	N4	X	P	Kg
C 41 2/3	P63	235.5	11	12.8	4	140	115	95	—	M8x19	4	336.5	27
C 41 2/3	P71	235.5	14	16.3	5	160	130	110	—	M8x16	4.5	336.5	28
C 41 2/3	P80	251.5	19	21.8	6	200	165	130	—	M10x14.5	4	356	29
C 41 2/3	P90	251.5	24	27.3	8	200	165	130	—	M10x14.5	4	356	29
C 41 2/3	P100	—	28	31.3	8	250	215	180	—	M12x16	4.5	366	33
C 41 2/3	P112	—	28	31.3	8	250	215	180	—	M12x16	4.5	366	33
C 41 2/3	P132	—	38	41.3	10	300	265	230	16	14	5	402.5	35
C 41 4	P63	—	11	12.8	4	140	115	95	—	M8x19	4	395	30
C 41 4	P71	—	14	16.3	5	160	130	110	—	M8x16	4.5	395	31
C 41 4	P80	—	19	21.8	6	200	165	130	—	M10x14.5	4	414.5	32
C 41 4	P90	—	24	27.3	8	200	165	130	—	M10x14.5	4	414.5	32
C 41 4	P100	—	28	31.3	8	250	215	180	—	M12x16	4.5	424.5	36
C 41 4	P112	—	28	31.3	8	250	215	180	—	M12x16	4.5	424.5	36

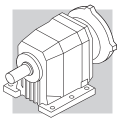

C 41...SK / SC

P

U

UF

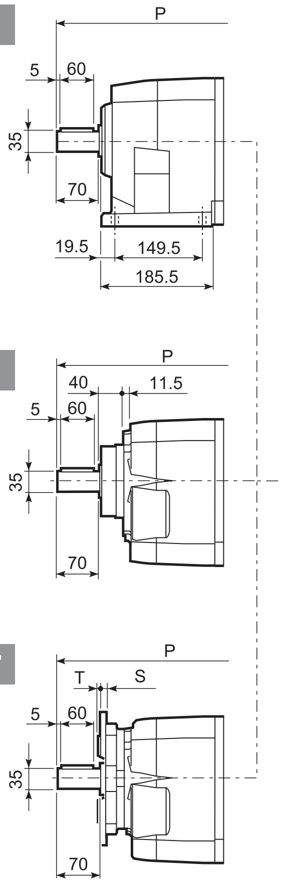
P
5
60
35
70
19.5
149.5
185.5
P
40
11.5
5
60
35
70
P
T
S
5
60
35
70

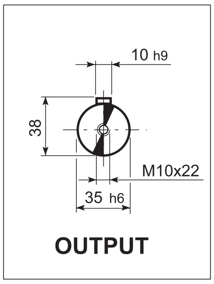
10 h9
38
M10x22
35 h6
OUTPUT

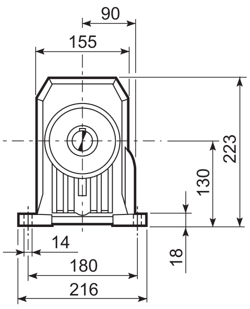
90
155
223
130
14
180
216
18

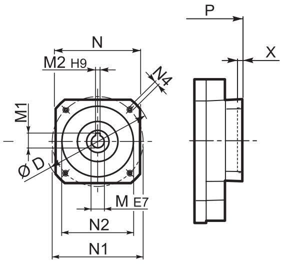
P
N
X
M2 H9
N4
M1
Ø D
M E7
N2
N1

SK...

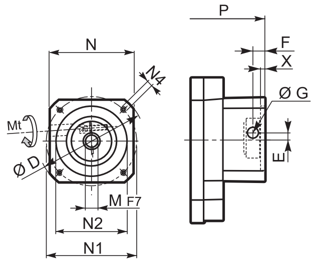
P
N
F
X
N4
Ø G
Mt
Ø D
E
M F7
N2
N1

SC...

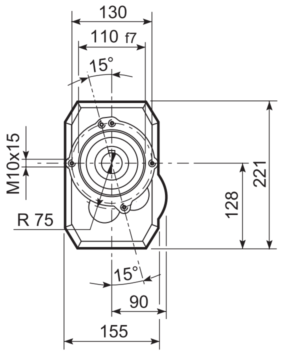
130
110 f7
15°
M10x15
R 75
221
128
15°
90
155

C 41_U

	D1	D2	D3	G	T	S
FA	130	165	200	11	3.5	11
FB	180	215	250	14	4	13

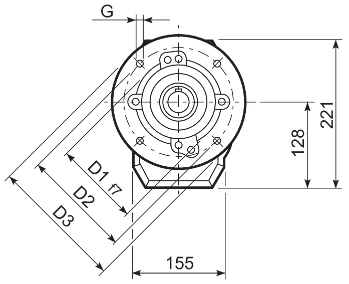
G
221
128
D1 f7
D2
D3
155

		D	M	M1	M2	N	N1	N2	N4	X	P 2/3x	P 4x	Kg
C41 4	**SK60A**	102	11	12.8	4	82	75	60	M5x10	3.5	—	370	31
C41 4	**SK60B**	102	14	16.3	5	82	75	60	M5x10	4	—	377	32
C41 4	**SK80A**	115	14	16.3	5	90	100	80	M6x12	4	—	377	32
C41 2/3	**SK80B**	120	14	16.3	5	96	100	80	M6x12	4	356.5	—	29/29
C41 2/3/4	**SK80C**	120	19	21.8	6	96	100	80	M6x12	4	356.5	418	29/29/32
C41 2/3/4	**SK95A**	130	14	16.3	5	102	115	95	M8x12	4	356.5	418	29/29/32
C41 2/3/4	**SK95B**	130	19	21.8	6	102	115	95	M8x12	4	356.5	418	29/29/33
C41 2/3/4	**SK95C**	130	24	27.3	8	102	115	95	M8x12	4	356.5	418	29/29/36
C41 2/3/4	**SK110A**	150	19	21.8	6	120	130	110	M8x12	5	356.5	418	29/29/36
C41 2/3/4	**SK110B**	150	24	27.3	8	120	130	110	M8x12	5	356.5	418	29/29/36
C41 2/3	**SK130A**	188	24	27.3	8	142	165	130	M10x20	5	356.5	—	31/31
C41 2/3	**SK130B**	189	32	35.3	10	160	165	130	M10x20	5	403	—	33/33
C41 2/3	**SK180A**	240	32	35.3	10	192	215	180	M12x19	5	403	—	33/33
C41 2/3	**SK180B**	240	38	41.3	10	192	215	180	M12x19	5	403	—	38/38

			Mt [Nm]	D	E	F	G	M	N	N1	N2	N4	X	P 2/3x	P 4x	Kg
C41 4	**SC60A**	M6	15	102	7	12.5	12.5	11	82	75	60	M5x10	4	—	397	32
C41 4	**SC60B**	M6	15	102	7	12.5	12.5	14	82	75	60	M5x10	4	—	397	33
C41 4	**SC80A**	M6	15	115	6	12.5	12.5	14	90	100	80	M6x12	4	—	397	33
C41 2/3	**SC80B**	M6	15	120	15.5	14.5	17.75	14	96	100	80	M6x12	4	380	—	30/30
C41 2/3/4	**SC80C**	M6	15	120	15.5	14.5	17.75	19	96	100	80	M6x12	4	380	441.5	30/30/33
C41 2/3/4	**SC95A**	M6	15	130	16.5	15	17.75	14	102	115	95	M8x16	4	380	441.5	30/30/34
C41 2/3/4	**SC95B**	M6	15	130	16.5	15	17.75	19	102	115	95	M8x16	4	380	441.5	30/30/34
C41 2/3/4	**SC95C**	M6	15	130	16.5	15	17.75	24	102	115	95	M8x16	4	380	441.5	30/30/35
C41 2/3/4	**SC110A**	M6	15	150	16.5	16	17.75	19	120	130	110	M8x16	5	380	441.5	31/31/39
C41 2/3/4	**SC110B**	M6	15	150	16.5	16	17.75	24	120	130	110	M8x16	5	380	441.5	31/31/39
C41 2/3	**SC130A**	M6	15	188	19	16	17.75	24	142	165	130	M10x20	5	380	—	32/32
C41 2/3	**SC130B**	M8	36	189	20	17	17.75	32	160	165	130	M10x20	5	426	—	36/36
C41 2/3	**SC180A**	M8	36	240	20	17.5	17.75	32	192	215	180	M12x24	5	430	—	36/36
C41 2/3	**SC180B**	M8	36	240	20	17.5	17.75	38	192	215	180	M12x24	5	430	—	35/35

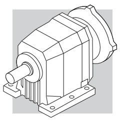

C 41...HS

P

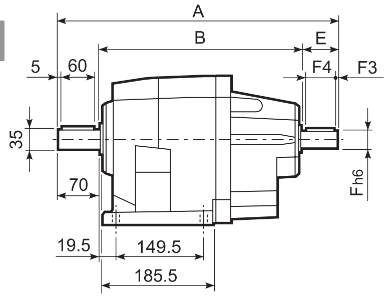
A
B
E
5
60
F4
F3
35
Fh6
70
19.5
149.5
185.5

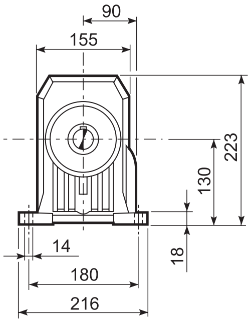
90
155
223
130
14
18
180
216

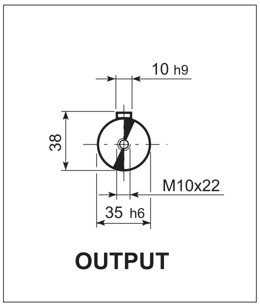
10 h9
38
M10x22
35 h6
OUTPUT

U

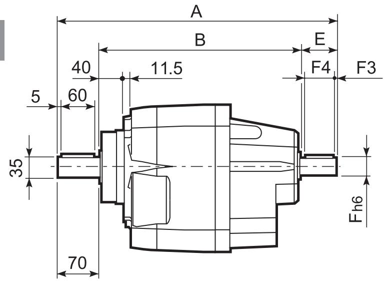
A
B
E
40
11.5
F4
F3
5
60
35
Fh6
70

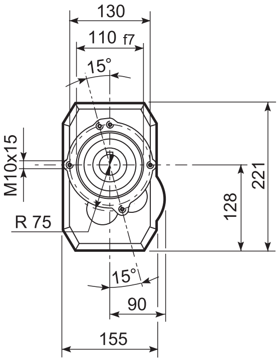
130
110 f7
15°
M10x15
R 75
128
221
15°
90
155

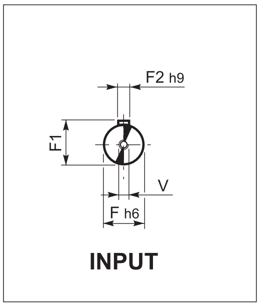
F2 h9
F1
V
F h6
INPUT

UF

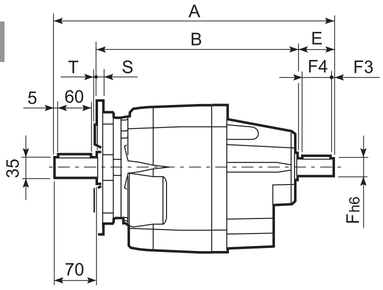
A
B
E
T
S
F4
F3
5
60
35
Fh6
70

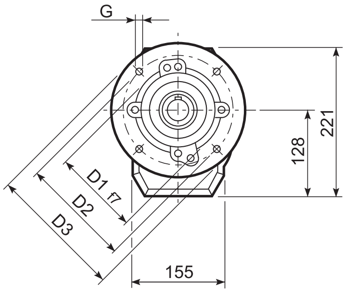
G
D1 f7
D2
D3
128
221
155

C 41_U

	D1	D2	D3	G	T	S
FA	130	165	200	11	3.5	11
FB	180	215	250	14	4	13

		A	B	E	F	F1	F2	F3	F4	V	Kg
C 41 2	**HS**	425.5	305.5	50	24	27	8	2.5	45	M8x19	30
C 41 3		425.5	305.5	50	24	27	8	2.5	45	M8x19	30
C 41 4		448	338	40	19	21.5	6	2.5	35	M6x16	33

C 51...M

P

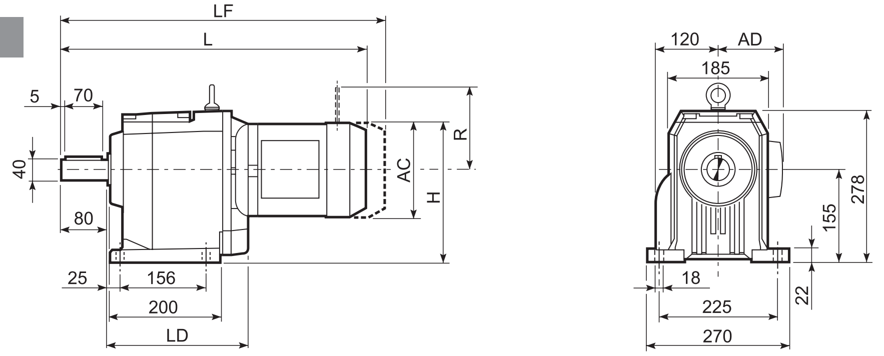
LF
L
5
70
40
80
25
156
200
LD
AC
H
R
120
AD
185
278
155
22
18
225
270

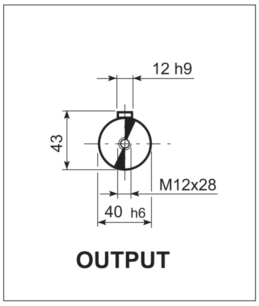
12 h9
43
M12x28
40 h6
OUTPUT

U

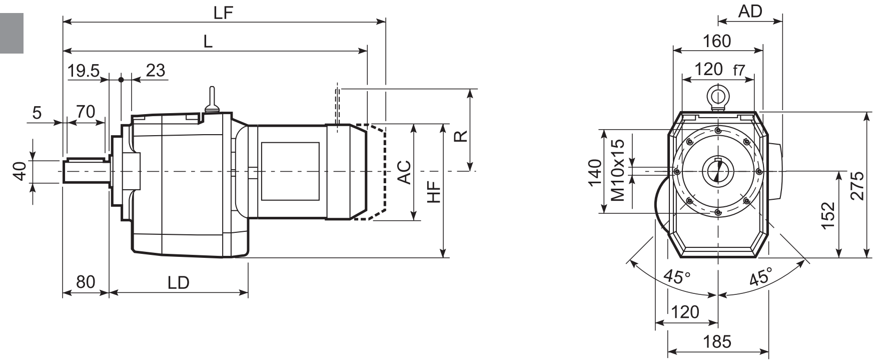
LF
L
19.5
23
5
70
40
80
LD
AC
HF
R
AD
160
120 f7
140
M10x15
152
275
45°
45°
120
185

UF

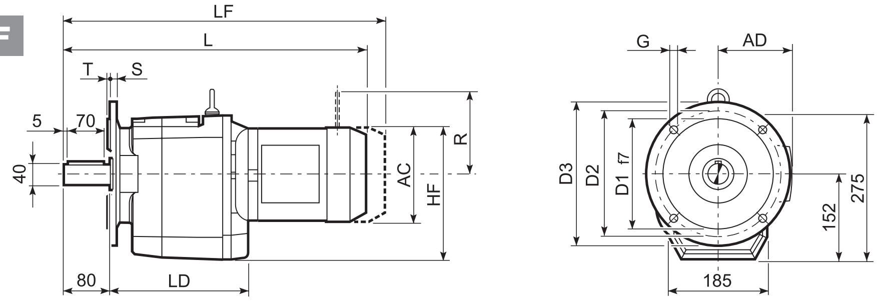
LF
L
T
S
5
70
40
80
LD
AC
HF
R
G
AD
D3
D2
D1 f7
152
275
185

C 51_U						
	D1	D2	D3	G	T	S
FA	180	215	250	14	4	13
FB	230	265	300	14	4	16

										M...FD M...FA		M...FD		M...FA	
			AC	**H**	**HF**	**L**	**LD**	**AD**	Kg	**LF**	Kg	**R**	**AD**	**R**	**AD**
C 51 2/3	**S1**	**M1**	138	224	221	517.5	—	108	49	578.5	52	103	135	124	108
C 51 2/3	**S2**	**M2S**	156	233	230	545.5	252.5	119	53	616.5	57	129	146	134	119
C 51 2/3	**S3**	**M3S**	195	252.5	249.5	589.5	267.5	142	58	685.5	65	160	158	160	142
C 51 2/3	**S3**	**M3L**	195	252.5	249.5	621.5	267.5	142	65	712.5	72	160	158	160	142
C 51 2/3	**S4**	**M4**	258	284	281	729.5	—	193	99	838.5	117	226	210	217	193
C 51 2/3	**S4**	**M4LC**	258	284	281	764.5	—	193	107	863.5	125	226	210	217	193
C 51 2/3	**S5**	**M5S**	310	310	307	816	—	245	127	956	157	266	245	247	245
C 51 2/3	**S5**	**M5L**	310	310	307	860	—	245	143	1000	173	266	245	247	245
C 51 4	**S1**	**M1**	138	224	221	589	—	108	52	650	55	103	135	124	108
C 51 4	**S2**	**M2S**	156	233	230	617	—	119	56	688	60	129	146	134	119
C 51 4	**S3**	**M3S**	195	252.5	249.5	661	—	142	61	757	68	160	158	160	142
C 51 4	**S3**	**M3L**	195	252.5	249.5	693	—	142	68	784	75	160	158	160	142

C 51...P(IEC)

P

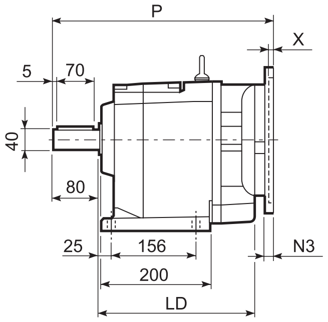
P
X
5
70
40
80
25
156
200
LD
N3

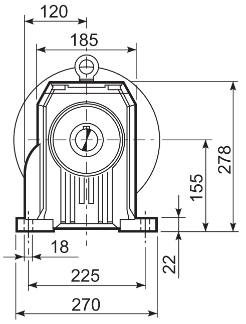
120
185
278
155
18
22
225
270

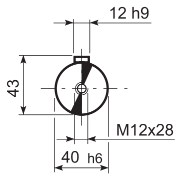
12 h9
43
M12x28
40 h6

OUTPUT

U

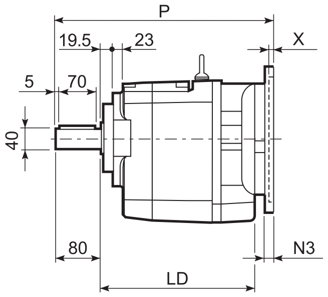
P
19.5
23
X
5
70
40
80
N3
LD

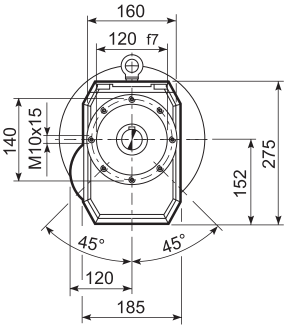
160
120 f7
140
M10x15
152
275
45°
45°
120
185

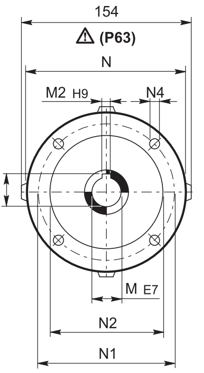
154
⚠ (P63)
N
M2 H9
N4
M1
M E7
N2
N1

INPUT

UF

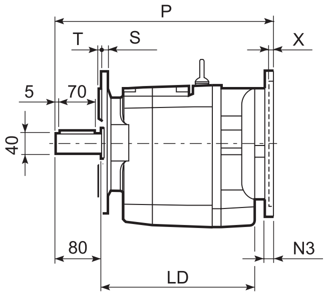
P
T
S
X
5
70
40
80
N3
LD

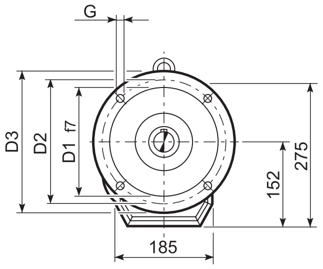
G
D3
D2
D1 f7
152
275
185

C 51_U	D1	D2	D3	G	T	S
FA	180	215	250	14	4	13
FB	230	265	300	14	4	16

		LD	M	M1	M2	N	N1	N2	N3	N4	X	P	Kg
C 51 2/3	**P63**	252.5	11	12.8	4	140	115	95	—	M8x19	4	362.5	45
C 51 2/3	**P71**	252.5	14	16.3	5	160	130	110	—	M8x16	4.5	362.5	45
C 51 2/3	**P80**	267.5	19	21.8	6	200	165	130	—	M10x14.5	4	382	47
C 51 2/3	**P90**	267.5	24	27.3	8	200	165	130	—	M10x14.5	4	382	47
C 51 2/3	**P100**	252.5	28	31.3	8	250	215	180	—	M12x16	4.5	392	51
C 51 2/3	**P112**	252.5	28	31.3	8	250	215	180	—	M12x16	4.5	392	51
C 51 2/3	**P132**	252.5	38	41.3	10	300	265	230	16	14	5	428.5	54
C 51 2/3	**P160**	—	42	45.3	12	350	300	250	23	18	5.5	479	58
C 51 2/3	**P180**	—	48	51.8	14	350	300	250	23	18	5.5	479	58
C 51 4	**P63**	—	11	12.8	4	140	115	95	—	M8x19	4	434	47
C 51 4	**P71**	—	14	16.3	5	160	130	110	—	M8x16	4.5	434	47
C 51 4	**P80**	—	19	21.8	6	200	165	130	—	M10x14.5	4	453.5	49
C 51 4	**P90**	—	24	27.3	8	200	165	130	—	M10x14.5	4	463.5	49
C 51 4	**P100**	—	28	31.3	8	250	215	180	—	M12x16	4.5	463.5	53
C 51 4	**P112**	—	28	31.3	8	250	215	180	—	M12x16	4.5	463.5	53

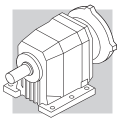

C 51...SK / SC

P

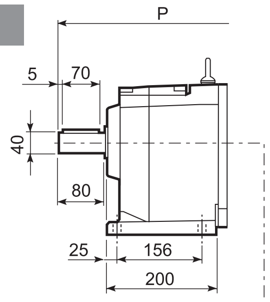
P
5
70
40
80
25
156
200

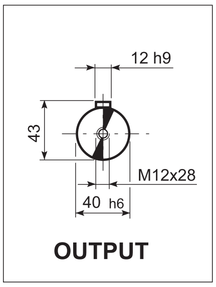
12 h9
43
M12x28
40 h6
OUTPUT

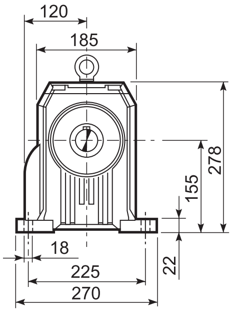
120
185
278
155
18
225
270
22

U

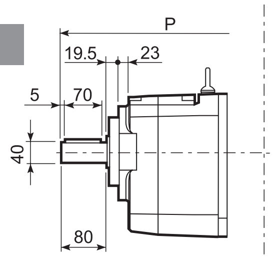
P
19.5
23
5
70
40
80

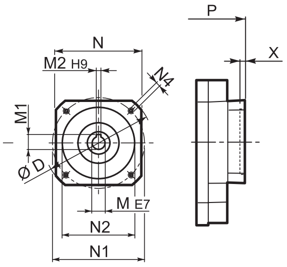
P
N
X
M2 H9
N4
M1
Ø D
M E7
N2
N1

SK...

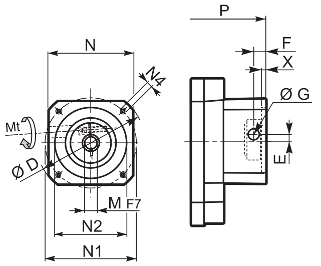
P
N
F
X
N4
Ø G
Mt
Ø D
E
M F7
N2
N1

SC...

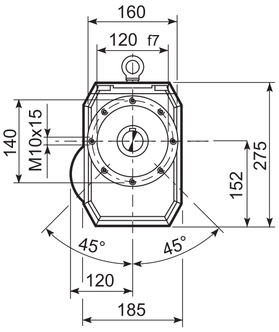
160
120 f7
140
M10x15
275
152
45°
45°
120
185

UF

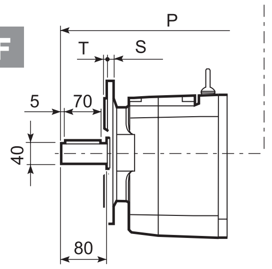
P
T
S
5
70
40
80

C 51_U	D1	D2	D3	G	T	S
FA	180	215	250	14	4	13
FB	230	265	300	14	4	16

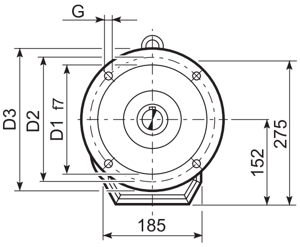
G
D3
D2
D1 f7
275
152
185

		D	M	M1	M2	N	N1	N2	N4	X	P		Kg
											2/3x	4x	
C 51 2/3	**SK80B**	120	14	16.3	5	96	100	80	M6x12	4	382	—	46/46
C 51 2/3/4	**SK80C**	120	19	21.8	6	96	100	80	M6x12	4	382	453.5	47/47/49
C 51 2/3/4	**SK95A**	130	14	16.3	5	102	115	95	M8x12	4	382	453.5	46/46/48
C 51 2/3/4	**SK95B**	130	19	21.8	6	102	115	95	M8x12	4	382	453.5	47/47/49
C 51 2/3/4	**SK95C**	130	24	27.3	8	102	115	95	M8x12	4	382	453.5	47/47/49
C 51 2/3/4	**SK110A**	150	19	21.8	6	120	130	110	M8x12	5	382	453.5	47/47/51
C 51 2/3/4	**SK110B**	150	24	27.3	8	120	130	110	M8x12	5	382	453.5	47/47/51
C 51 2/3/4	**SK130A**	188	24	27.3	8	142	165	130	M10x20	5	382	453.5	49/49/52
C 51 2/3	**SK130B**	189	32	35.3	10	160	165	130	M10x20	5	428.5	—	55/55
C 51 2/3	**SK180A**	240	32	35.3	10	192	215	180	M12x19	5	428.5	—	55/55
C 51 2/3	**SK180B**	240	38	41.3	10	192	215	180	M12x19	5	428.5	—	55/55

			Mt [Nm]	D	E	F	G	M	N	N1	N2	N4	X	P		Kg
														2/3x	4x	
C 51 2/3	**SC80B**	M6	15	120	15.5	14.5	17.75	14	96	100	80	M6x12	4	405.5	—	47/47
C 51 2/3/4	**SC80C**	M6	15	120	15.5	14.5	17.75	19	96	100	80	M6x12	4	405.5	477	48/48/50
C 51 2/3/4	**SC95A**	M6	15	130	16.5	15	17.75	14	102	115	95	M8x16	4	405.5	477	47/47/49
C 51 2/3/4	**SC95B**	M6	15	130	16.5	15	17.75	19	102	115	95	M8x16	4	405.5	477	48/48/50
C 51 2/3/4	**SC95C**	M6	15	130	16.5	15	17.75	24	102	115	95	M8x16	4	405.5	477	48/48/50
C 51 2/3/4	**SC110A**	M6	15	150	16.5	16	17.75	19	120	130	110	M8x16	5	405.5	477	49/49/52
C 51 2/3/4	**SC110B**	M6	15	150	16.5	16	17.75	24	120	130	110	M8x16	5	405.5	477	49/49/52
C 51 2/3/4	**SC130A**	M6	15	188	19	16	17.75	24	142	165	130	M10x20	5	405.5	477	50/50/53
C 51 2/3	**SC130B**	M8	36	189	20	17	17.75	32	160	165	130	M10x20	5	451.5	—	54/54
C 51 2/3	**SC180A**	M8	36	240	20	17.5	17.75	32	192	215	180	M12x24	5	455.5	—	54/54
C 51 2/3	**SC180B**	M8	36	240	20	17.5	17.75	38	192	215	180	M12x24	5	455.5	—	54/54

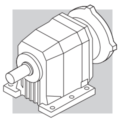

C 51...HS

P

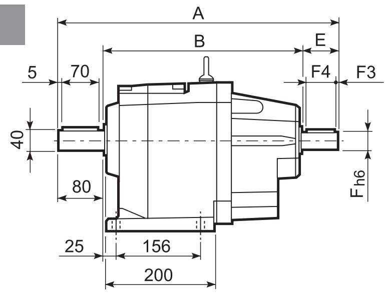
A
B
E
5
70
F4
F3
40
80
Fh6
25
156
200

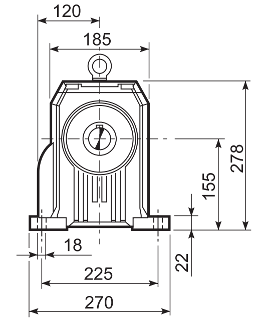
120
185
278
155
18
22
225
270

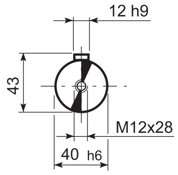
12 h9
43
M12x28
40 h6

OUTPUT

U

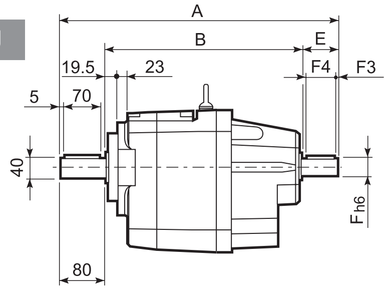
A
B
E
19.5
23
F4
F3
5
70
40
Fh6
80

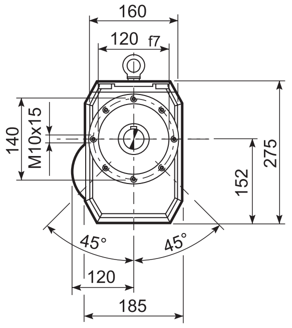
160
120 f7
140
M10x15
275
152
45°
45°
120
185

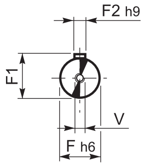
F2 h9
F1
V
F h6

INPUT

UF

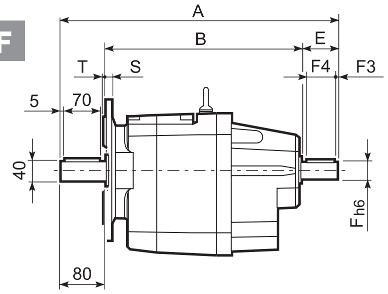
A
B
E
T
S
F4
F3
5
70
40
Fh6
80

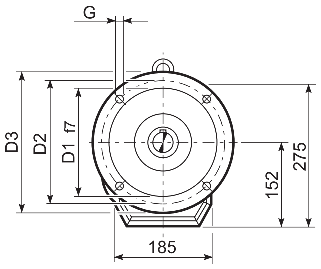
G
D3
D2
D1 f7
275
152
185

C 51_U

	D1	D2	D3	G	T	S
FA	180	215	250	14	4	13
FB	230	265	300	14	4	16

		A	B	E	F	F1	F2	F3	F4	V	Kg
C 51 2	**HS**	451.5	322	50	24	24	8	2.5	45	M8x19	45
C 51 3		451.5	322	50	24	24	8	2.5	45	M8x19	45
C 51 4		484	364	40	19	21.5	6	2.5	35	M6x16	48

C 61...M

P

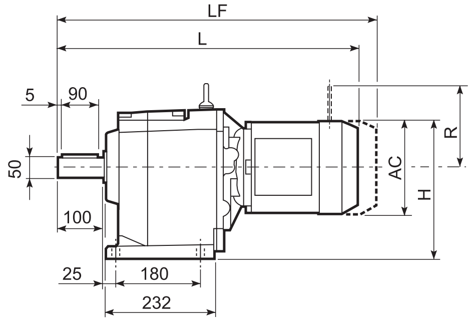

LF
L
5
90
50
100
25
180
232
AC
H
R

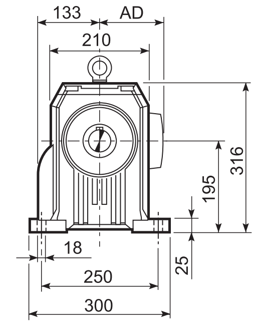

133
AD
210
316
195
18
250
300
25

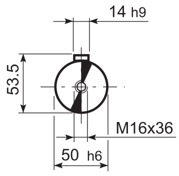

14 h9
53.5
M16x36
50 h6

OUTPUT

U

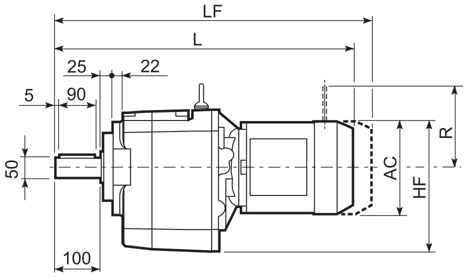

LF
L
25
22
5
90
50
100
AC
HF
R

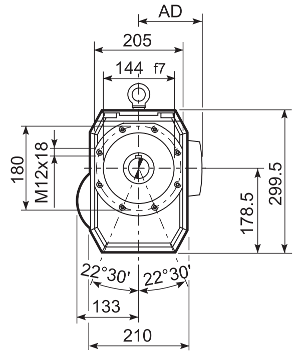

AD
205
144 f7
180
M12x18
178.5
299.5
22°30'
22°30'
133
210

UF

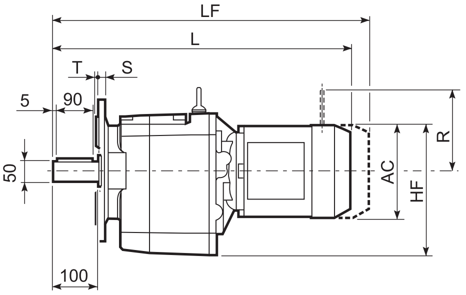

LF
L
T
S
5
90
50
100
AC
HF
R

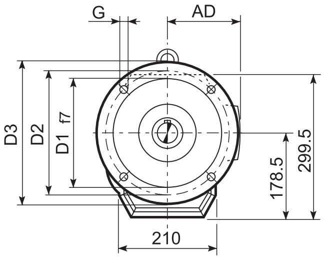

G
AD
D3
D2
D1 f7
178.5
299.5
210

C 61_U						
	D1	**D2**	**D3**	**G**	**T**	**S**
FA	230	265	300	14	4	16
FB	250	300	350	18	5	18

									M...FD M...FA		M...FD		M...FA	
			AC	**H**	**HF**	**L**	**AD**	Kg	**LF**	Kg	**R**	**AD**	**R**	**AD**
C 61 2/3	**S2**	**M2S**	156	273	256.5	598.5	119	61	669.5	65	129	146	134	119
C 61 2/3	**S3**	**M3S**	195	292.5	276	642.5	142	66	738.5	74	160	158	160	142
C 61 2/3	**S3**	**M3L**	195	292.5	276	674.5	142	74	765.5	81	160	158	160	142
C 61 2/3	**S4**	**M4**	258	324	307.5	782.5	193	108	891.5	126	226	210	217	193
C 61 2/3	**S4**	**M4LC**	258	324	307.5	817.5	193	116	916.5	134	226	210	217	193
C 61 2/3	**S5**	**M5S**	310	350	333.5	869	245	136	1009	166	266	245	247	245
C 61 2/3	**S5**	**M5L**	310	350	333.5	913	245	152	1053	182	266	245	247	245
C 61 4	**S1**	**M1**	138	264	247.5	641	108	71	702	74	103	135	124	108
C 61 4	**S2**	**M2S**	156	273	256.5	669	119	75	740	78	129	146	134	119
C 61 4	**S3**	**M3S**	195	292.5	276	713	142	79	809	87	160	158	160	142
C 61 4	**S3**	**M3L**	195	292.5	276	745	142	87	836	94	160	158	160	142

C 61...P(IEC)

P

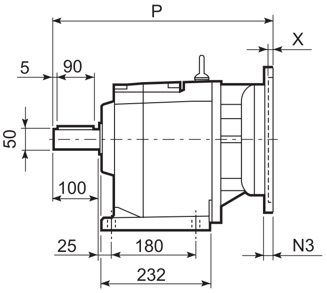
P
X
5
90
50
100
25
180
N3
232

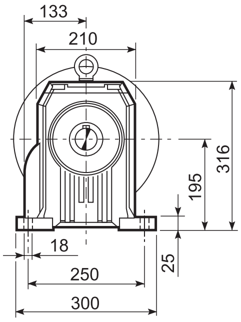
133
210
316
195
18
25
250
300

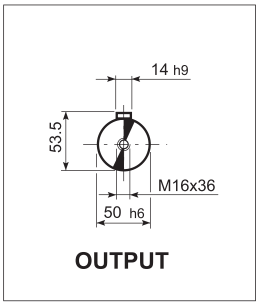
14 h9
53.5
M16x36
50 h6
OUTPUT

U

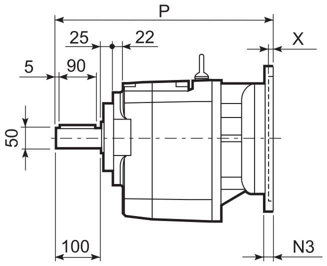
P
25
22
X
5
90
50
100
N3

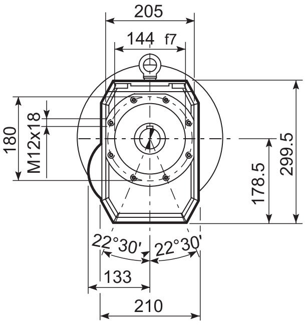
205
144 f7
180
M12x18
178.5
299.5
22°30'
22°30'
133
210

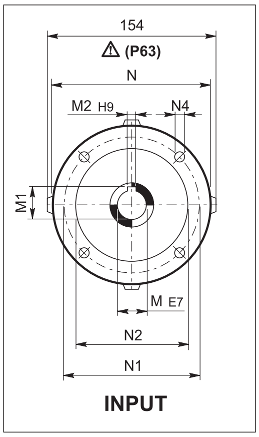
154
⚠ (P63)
N
M2 H9
N4
M1
M E7
N2
N1
INPUT

UF

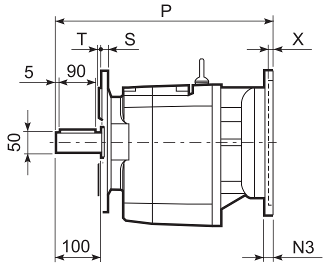
P
T
S
X
5
90
50
100
N3

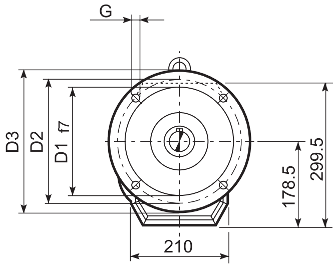
G
D3
D2
D1 f7
178.5
299.5
210

C 61_U	D1	D2	D3	G	T	S
FA	230	265	300	14	4	16
FB	250	300	350	18	5	18

		M	M1	M2	N	N1	N2	N3	N4	X	P	Kg
C 61 2/3	**P63**	11	12.8	4	140	115	95	—	M8x19	4	415.5	55
C 61 2/3	**P71**	14	16.3	5	160	130	110	—	M8x16	4.5	415.5	57
C 61 2/3	**P80**	19	21.8	6	200	165	130	—	M10x14.5	4	435	61
C 61 2/3	**P90**	24	27.3	8	200	165	130	—	M10x14.5	4	435	61
C 61 2/3	**P100**	28	31.3	8	250	215	180	—	M12x16	4.5	444	65
C 61 2/3	**P112**	28	31.3	8	250	215	180	—	M12x16	4.5	444	65
C 61 2/3	**P132**	38	41.3	10	300	265	230	16	14	5	481.5	68
C 61 2/3	**P160**	42	45.3	12	350	300	250	23	18	5.5	532	73
C 61 2/3	**P180**	48	51.8	14	350	300	250	23	18	5.5	532	73
C 61 4	**P63**	11	12.8	4	140	115	95	—	M8x19	4	486	61
C 61 4	**P71**	14	16.3	5	160	130	110	—	M8x16	4.5	489	63
C 61 4	**P80**	19	21.8	6	200	165	130	—	M10x14.5	4	505.5	67
C 61 4	**P90**	24	27.3	8	200	165	130	—	M10x14.5	4	505.5	67
C 61 4	**P100**	28	31.3	8	250	215	180	—	M12x16	4.5	515.5	71
C 61 4	**P112**	28	31.3	8	250	215	180	—	M12x16	4.5	515.5	71

C 61...SK / SC

P

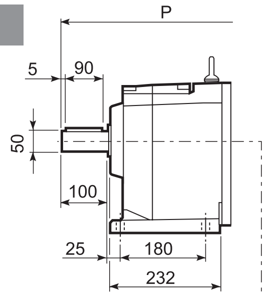
P
5
90
50
100
25
180
232

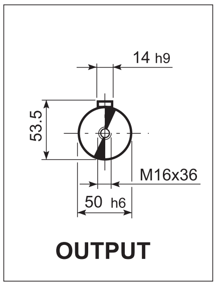
14 h9
53.5
M16x36
50 h6
OUTPUT

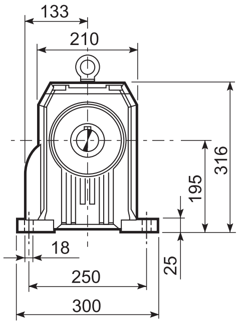
133
210
316
195
18
25
250
300

U

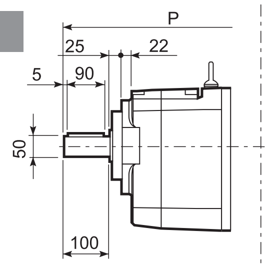
P
25
22
5
90
50
100

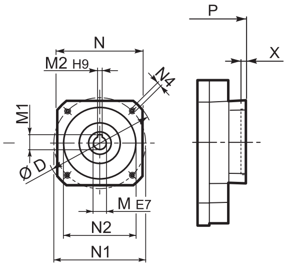
P
N
M2 H9
N4
X
M1
Ø D
M E7
N2
N1

SK...

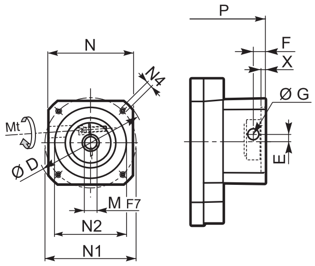
P
N
F
X
N4
Ø G
Mt
Ø D
E
M F7
N2
N1

SC...

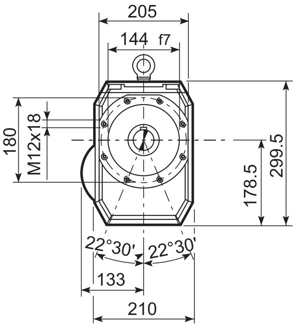
205
144 f7
180
M12x18
299.5
178.5
22°30'
22°30'
133
210

UF

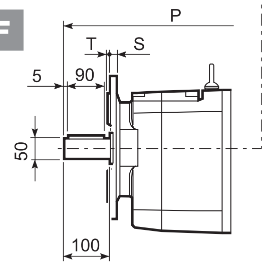
P
T
S
5
90
50
100

C 61_U

	D1	D2	D3	G	T	S
FA	230	265	300	14	4	16
FB	250	300	350	18	5	18

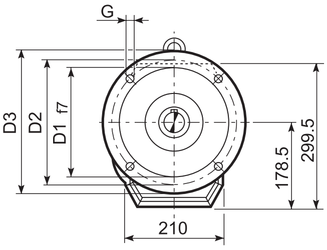
G
D3
D2
D1 f7
299.5
178.5
210

		D	M	M1	M2	N	N1	N2	N4	X	P		Kg
											2/3x	4x	
C 61 4	**SK80B**	120	14	16.3	5	96	100	80	M6x12	4	—	505.5	62
C 61 2/3/4	**SK80C**	120	19	21.8	6	96	100	80	M6x12	4	435	505.5	63/63/69
C 61 2/3/4	**SK95A**	130	14	16.3	5	102	115	95	M8x12	4	435	505.5	60/60/67
C 61 2/3/4	**SK95B**	130	19	21.8	6	102	115	95	M8x12	4	435	505.5	63/63/69
C 61 2/3/4	**SK95C**	130	24	27.3	8	102	115	95	M8x12	4	435	505.5	63/63/69
C 61 2/3/4	**SK110A**	140	19	21.8	6	120	130	110	M8x12	5	435	505.5	63/63/69
C 61 2/3/4	**SK110B**	140	24	27.3	8	120	130	110	M8x12	5	435	505.5	63/63/69
C 61 2/3/4	**SK130A**	188	24	27.3	8	142	165	130	M10x20	5	435	505.5	67/67/80
C 61 2/3	**SK130B**	189	32	35.3	10	160	165	130	M10x20	5	481.5	—	72/72
C 61 2/3	**SK180A**	240	32	35.3	10	192	215	180	M12x19	5	481.5	—	72/72
C 61 2/3	**SK180B**	240	38	41.3	10	192	215	180	M12x19	5	481.5	—	66/66

			Mt [Nm]	D	E	F	G	M	N	N1	N2	N4	X	P		Kg
														2/3x	4x	
C 61 4	**SC80B**	M6	15	120	15.5	14.5	17.75	14	96	100	80	M6x12	4	—	529	63
C 61 2/3/4	**SC80C**	M6	15	120	15.5	14.5	17.75	19	96	100	80	M6x12	4	458.5	529	64/64/70
C 61 2/3/4	**SC95A**	M6	15	130	16.5	15	17.75	14	102	115	95	M8x16	4	458.5	529	61/61/68
C 61 2/3/4	**SC95B**	M6	15	130	16.5	15	17.75	19	102	115	95	M8x16	4	458.5	529	64/64/70
C 61 2/3/4	**SC95C**	M6	15	130	16.5	15	17.75	24	102	115	95	M8x16	4	458.5	529	64/64/70
C 61 2/3/4	**SC110A**	M6	15	140	16.5	16	17.75	19	120	130	110	M8x16	5	458.5	529	65/65/70
C 61 2/3/4	**SC110B**	M6	15	140	16.5	16	17.75	24	120	130	110	M8x16	5	458.5	529	65/65/70
C 61 2/3/4	**SC130A**	M6	15	188	19	16	17.75	24	142	165	130	M10x20	5	458.5	529	66/66/81
C 61 2/3	**SC130B**	M8	36	189	20	17	17.75	32	160	165	130	M10x20	5	504.5	—	75/75
C 61 2/3	**SC180A**	M8	36	240	20	17.5	17.75	32	192	215	180	M12x24	5	508.5	—	75/75
C 61 2/3	**SC180B**	M8	36	240	20	17.5	17.75	38	192	215	180	M12x24	5	508.5	—	69/69

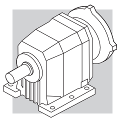

C 61...HS

P

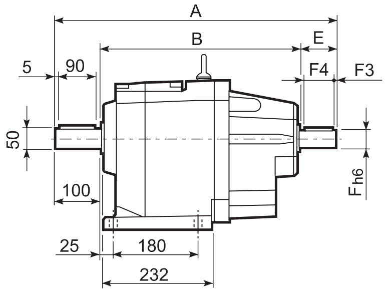
A
B
E
5
90
F4
F3
50
Fh6
100
25
180
232

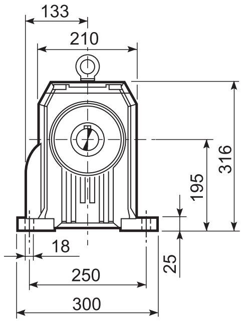
133
210
316
195
18
250
25
300

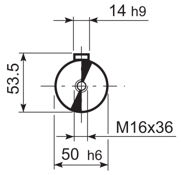
14 h9
53.5
M16x36
50 h6

OUTPUT

U

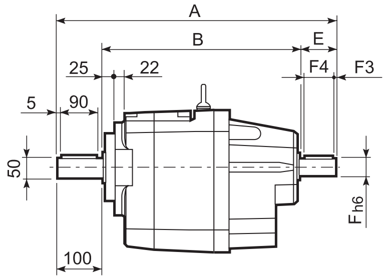
A
B
E
25
22
F4
F3
5
90
50
Fh6
100

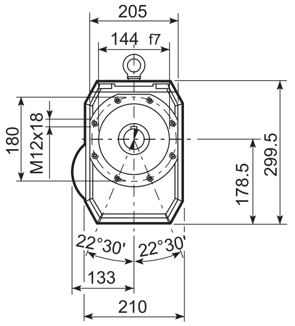
205
144 f7
180
M12x18
178.5
299.5
22°30'
22°30'
133
210

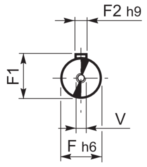
F2 h9
F1
V
F h6

INPUT

UF

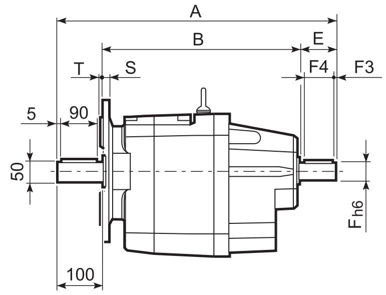
A
B
E
T
S
F4
F3
5
90
50
Fh6
100

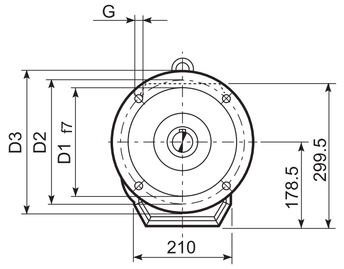
G
D3
D2
D1 f7
178.5
299.5
210

C 61_U						
	D1	**D2**	**D3**	**G**	**T**	**S**
FA	230	265	300	14	4	16
FB	250	300	350	18	5	18

		A	**B**	**E**	**F**	**F1**	**F2**	**F3**	**F4**	**V**	Kg
C 61 2	**HS**	532	372	60	28	31	8	5	50	M10x22	66
C 61 3		532	372	60	28	31	8	5	50	M10x22	66
C 61 4		575	425	50	24	27	8	2.5	45	M8x19	72

C 70...M

P

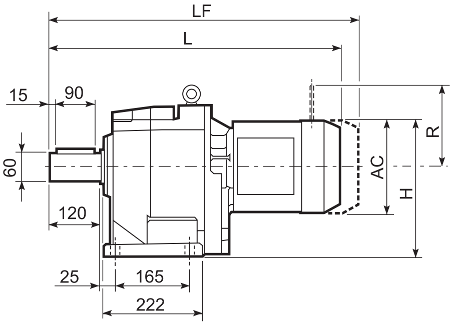
LF
L
15
90
60
120
25
165
222
AC
H
R

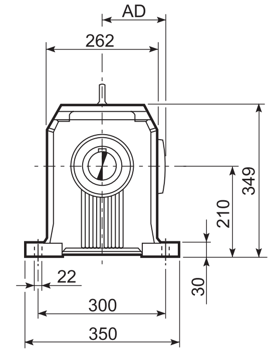
AD
262
349
210
22
300
350
30

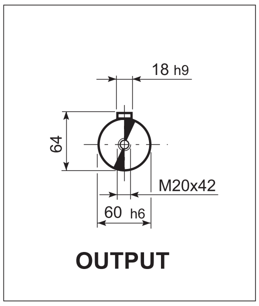
18 h9
64
M20x42
60 h6
OUTPUT

F

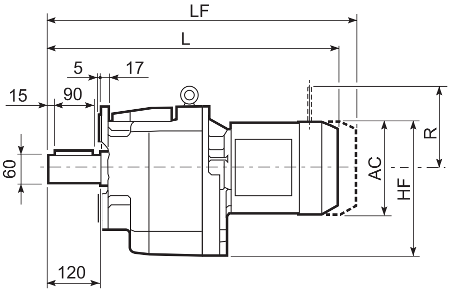
LF
L
5
17
15
90
60
120
AC
HF
R

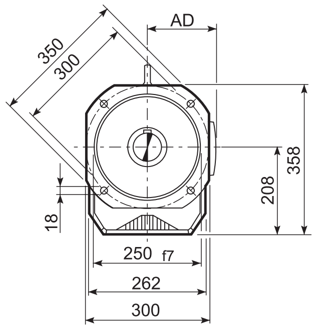
AD
350
300
358
208
18
250 f7
262
300

									M...FD M...FA		M...FD		M...FA	
			AC	H	HF	L	AD	Kg	LF	Kg	R	AD	R	AD
C 70 2/3	**S2**	**M2S**	156	288	286	636.5	119	88	707.5	92	129	146	134	119
C 70 2/3	**S3**	**M3S**	195	307.5	305.5	680.5	142	93	776.5	101	160	158	160	142
C 70 2/3	**S3**	**M3L**	195	307.5	305.5	712.5	142	101	803.5	108	160	158	160	142
C 70 2/3	**S4**	**M4**	258	339	337	820.5	193	135	929.5	153	226	210	217	193
C 70 2/3	**S4**	**M4LC**	258	339	337	855.5	193	143	954.5	161	226	210	217	193
C 70 2/3	**S5**	**M5S**	310	365	363	907	245	163	1047	193	266	245	247	245
C 70 2/3	**S5**	**M5L**	310	365	363	951	245	179	1091	209	266	245	247	245
C 70 4	**S1**	**M1**	138	279	277	659.5	108	88	720.5	91	103	135	124	108
C 70 4	**S2**	**M2S**	156	288	286	687.5	119	92	758.5	96	129	146	134	119
C 70 4	**S3**	**M3S**	195	307.5	305.5	731.5	142	97	827.5	104	160	158	160	142
C 70 4	**S3**	**M3L**	195	307.5	305.5	763.5	142	104	854.5	111	160	158	160	142
C 70 4	**S4**	**M4**	258	339	337	871.5	193	138	980.5	156	226	210	217	193
C 70 4	**S4**	**M4LC**	258	339	337	906.5	193	146	1005.5	164	226	210	217	193

C 70...P(IEC)

P

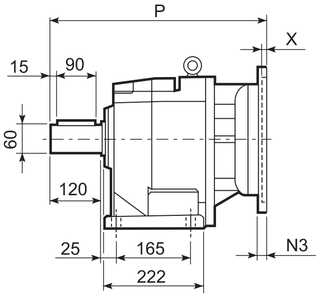
P
X
15
90
60
120
25
165
222
N3

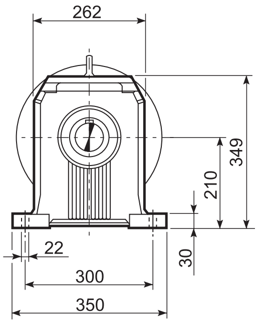
262
349
210
22
30
300
350

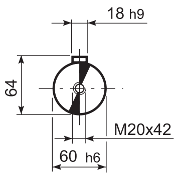
18 h9
64
M20x42
60 h6

OUTPUT

F

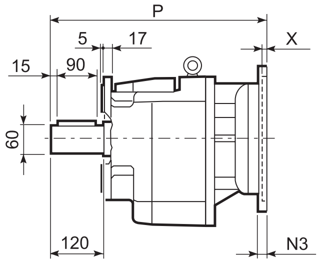
P
5
17
X
15
90
60
120
N3

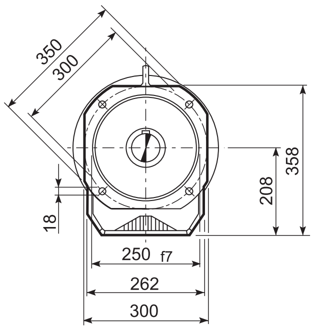
350
300
358
208
18
250 f7
262
300

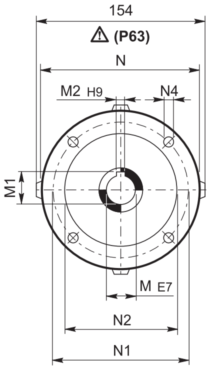
154
⚠ (P63)
N
M2 H9
N4
M1
M E7
N2
N1

INPUT

		M	M1	M2	N	N1	N2	N3	N4	X	P	Kg
C 70 2/3	**P80**	19	21.8	6	200	165	130	—	M10x14.5	4	473	88
C 70 2/3	**P90**	24	27.3	8	200	165	130	—	M10x14.5	4	473	88
C 70 2/3	**P100**	28	31.3	8	250	215	180	—	M12x16	4.5	483	92
C 70 2/3	**P112**	28	31.3	8	250	215	180	—	M12x16	4.5	483	92
C 70 2/3	**P132**	38	41.3	10	300	265	230	16	14	5	519.5	95
C 70 2/3	**P160**	42	45.3	12	350	300	250	23	18	6	575	107
C 70 2/3	**P180**	48	51.8	14	350	300	250	23	18	6	575	107
C 70 2	**P200**	55	59.3	16	400	350	300	—	M16x25	7	600	129
C 70 4	**P63**	11	12.8	4	140	115	95	—	M8x19	4	504.5	91
C 70 4	**P71**	14	16.3	5	160	130	110	—	M8x16	4.5	504.5	91
C 70 4	**P80**	19	21.8	6	200	165	130	—	M10x14.5	4	524	92
C 70 4	**P90**	24	27.3	8	200	165	130	—	M10x14.5	4	524	92
C 70 4	**P100**	28	31.3	8	250	215	180	—	M12x16	4.5	534	96
C 70 4	**P112**	28	31.3	8	250	215	180	—	M12x16	4.5	534	96
C 70 4	**P132**	38	41.3	10	300	265	230	16	14	5	570.5	98

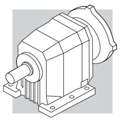

C 70...HS

P

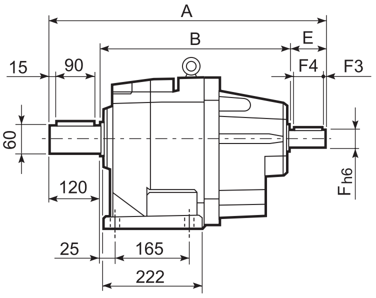
A
B
E
15
90
F4
F3
60
120
Fh6
25
165
222

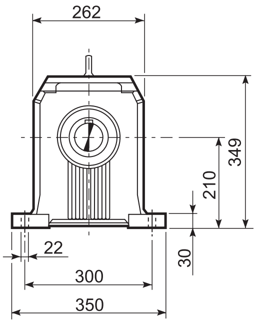
262
349
210
22
30
300
350

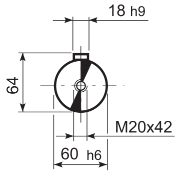
18 h9
64
M20x42
60 h6

OUTPUT

F

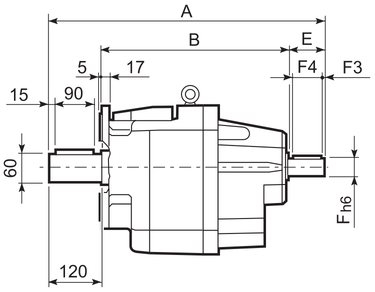
A
B
E
5
17
F4
F3
15
90
60
Fh6
120

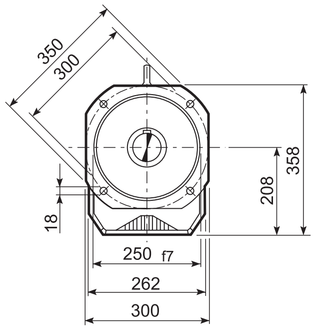
350
300
358
208
18
250 f7
262
300

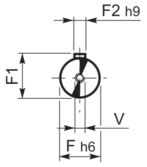
F2 h9
F1
V
F h6

INPUT

		A	B	E	F	F1	F2	F3	F4	V	Kg
C 70 2	**HS**	657.5	427.5	110	42	45	12	10	90	M12x28	108
C 70 3		657.5	427.5	110	42	45	12	10	90	M12x28	108
C 70 4		593.5	423.5	50	24	27	8	2.5	45	M8x19	94

C 80...M

P

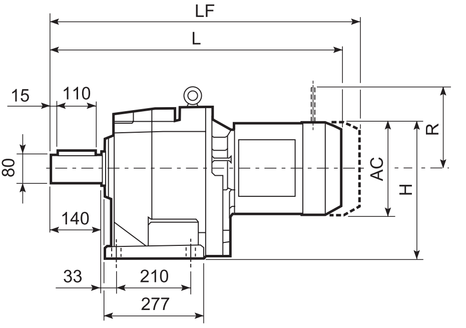
LF
L
15
110
80
140
33
210
277
AC
H
R

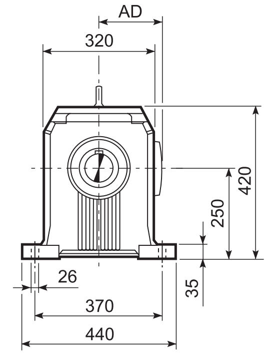
AD
320
420
250
26
370
440
35

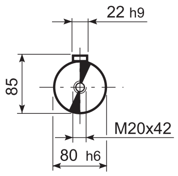
22 h9
85
M20x42
80 h6

OUTPUT

F

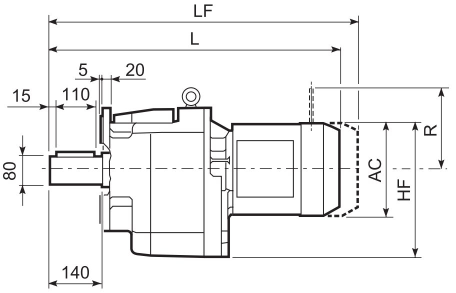
LF
L
5
20
15
110
80
140
AC
HF
R

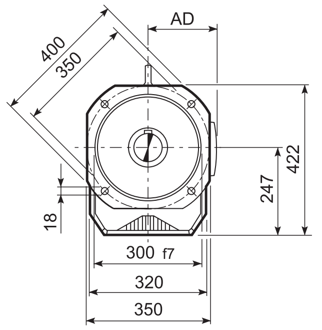
400
350
AD
422
247
18
300 f7
320
350

									M...FD M...FA		M...FD		M...FA	
			AC	H	HF	L	AD	Kg	LF	Kg	R	AD	R	AD
C 80 2/3	**S3**	**M3S**	195	347.5	344.5	742.5	142	139	838.5	146	160	158	160	142
C 80 2/3	**S3**	**M3L**	195	347.5	344.5	774.5	142	146	865.5	153	160	158	160	142
C 80 2/3	**S4**	**M4**	258	379	376	882.5	193	180	991.5	196	226	210	217	193
C 80 2/3	**S4**	**M4LC**	258	379	376	917.5	193	188	1016.5	204	226	210	217	193
C 80 2/3	**S5**	**M5S**	310	405	402	969	245	208	1109	238	266	245	247	245
C 80 2/3	**S5**	**M5L**	310	405	402	1013	245	224	1153	254	266	245	247	245
C 80 4	**S1**	**M1**	138	319	316	733.5	108	133	794.5	136	103	135	124	108
C 80 4	**S2**	**M2S**	156	328	325	761.5	119	137	832.5	141	129	146	134	119
C 80 4	**S3**	**M3S**	195	347.5	344.5	805.5	142	142	901.5	149	160	158	160	142
C 80 4	**S3**	**M3L**	195	347.5	344.5	837.5	142	149	928.5	156	160	158	160	142
C 80 4	**S4**	**M4**	258	379	376	945.5	193	183	1054.5	201	226	210	217	193
C 80 4	**S4**	**M4LC**	258	379	376	980.5	193	191	1079.5	209	226	210	217	193

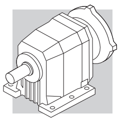

C 80...P(IEC)

P

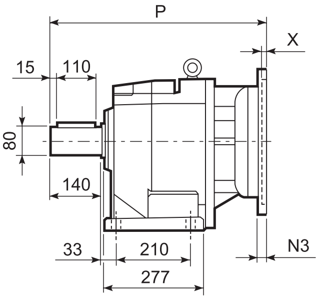
P
X
15
110
80
140
33
210
277
N3

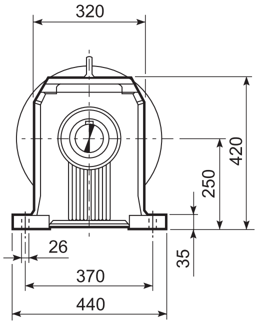
320
420
250
26
370
440
35

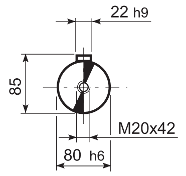
22 h9
85
M20x42
80 h6

OUTPUT

F

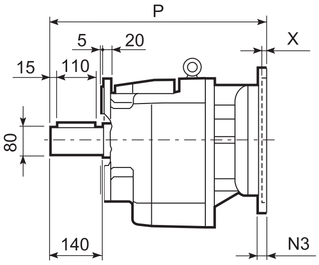
P
5
20
X
15
110
80
140
N3

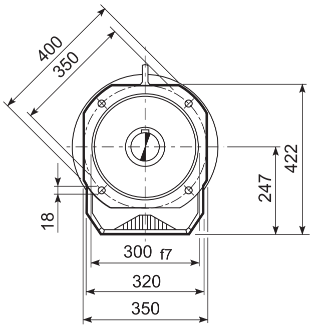
400
350
18
247
422
300 f7
320
350

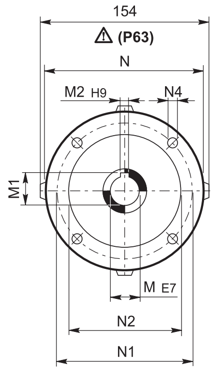
154
⚠ (P63)
N
M2 H9
N4
M1
M E7
N2
N1

INPUT
P63...P200

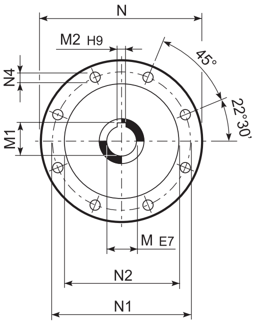
N
M2 H9
45°
N4
22°30'
M1
M E7
N2
N1

INPUT
P225

		M	M1	M2	N	N1	N2	N3	N4	X	P	Kg
C 80 2/3	**P80**	19	21.8	6	200	165	130	—	M10x14.5	4	533	135
C 80 2/3	**P90**	24	27.3	8	200	165	130	—	M10x14.5	4	533	135
C 80 2/3	**P100**	28	31.3	8	250	215	180	—	M12x16	4.5	543	139
C 80 2/3	**P112**	28	31.3	8	250	215	180	—	M12x16	4.5	543	139
C 80 2/3	**P132**	38	41.3	10	300	265	230	16	14	5	579.5	141
C 80 2/3	**P160**	42	45.3	12	350	300	250	23	18	6	635	154
C 80 2/3	**P180**	48	51.8	14	350	300	250	23	18	6	635	154
C 80 2	**P200**	55	59.3	16	400	350	300	—	M16x25	7	660	176
C 80 2	**P225**	60	64.4	18	450	400	350	25	18	6	705.5	178
C 80 4	**P63**	11	12.8	4	140	115	95	—	M8x19	4	576.5	138
C 80 4	**P71**	14	16.3	5	160	130	110	—	M8x16	4.5	576.5	138
C 80 4	**P80**	19	21.8	6	200	165	130	—	M10x14.5	4	596	140
C 80 4	**P90**	24	27.3	8	200	165	130	—	M10x14.5	4	596	140
C 80 4	**P100**	28	31.3	8	250	215	180	—	M12x16	4.5	606	144
C 80 4	**P112**	28	31.3	8	250	215	180	—	M12x16	4.5	606	144
C 80 4	**P132**	38	41.3	10	300	265	230	16	M12x16	5	642.5	146

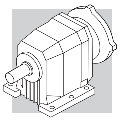

C 80...HS

P

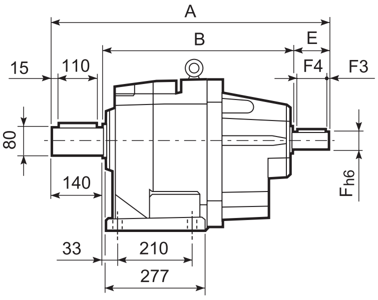
A
B
E
15
110
F4
F3
80
140
Fh6
33
210
277

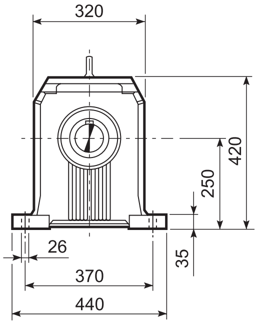
320
420
250
26
35
370
440

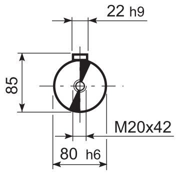
22 h9
85
M20x42
80 h6

OUTPUT

F

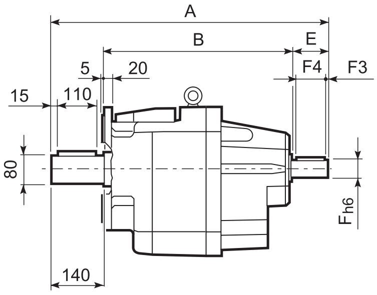
A
B
E
5
20
F4
F3
15
110
80
Fh6
140

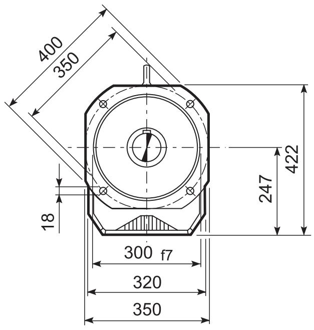
400
350
422
247
18
300 f7
320
350

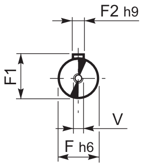
F2 h9
F1
V
F h6

INPUT

		A	B	E	F	F1	F2	F3	F4	V	Kg
C 80 2	**HS**	718.5	468.5	110	42	45	12	10	90	M12x28	154
C 80 3		718.5	468.5	110	42	45	12	10	90	M12x28	154
C 80 4		666.5	476.5	50	24	27	8	2.5	45	M8x19	141

C 90...M

P

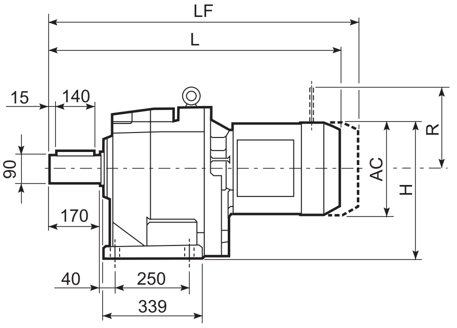
LF
L
15
140
90
170
AC
H
R
40
250
339

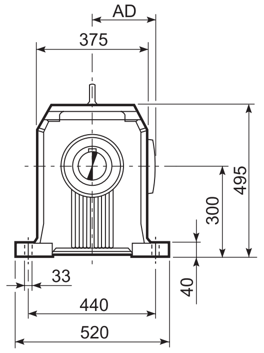
AD
375
495
300
33
40
440
520

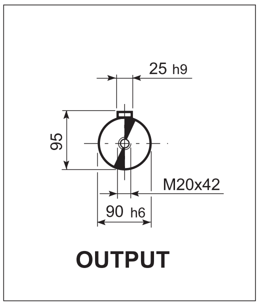
25 h9
95
M20x42
90 h6
OUTPUT

F

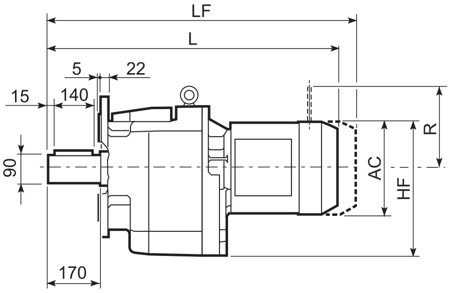
LF
L
5
22
15
140
90
AC
HF
R
170

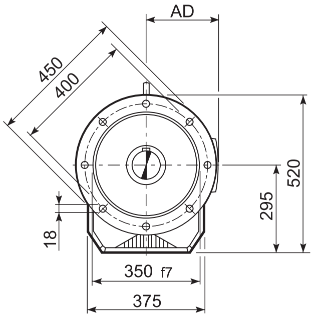
AD
450
400
520
295
18
350 f7
375

								M...FD M...FA		M...FD		M...FA	
		AC	H	HF	L	AD	Kg	LF	Kg	R	AD	R	AD
C 90 2/3	**S3**	**M3S**	195	397.5	392.5	852	142	228	948	236	160	158	160	142
C 90 2/3	**S3**	**M3L**	195	397.5	392.5	884	142	236	975	243	160	158	160	142
C 90 2/3	**S4**	**M4**	258	429	424	992	193	270	1101	288	226	210	217	193
C 90 2/3	**S4**	**M4LC**	258	429	424	1027	193	278	1126	296	226	210	217	193
C 90 2/3	**S5**	**M5S**	310	455	450	1078.5	245	298	1218.5	328	266	245	247	245
C 90 2/3	**S5**	**M5L**	310	455	450	1122.5	245	314	1262.5	344	266	245	247	245
C 90 4	**S1**	**M1**	138	369	364	862	108	226	923	228	103	135	124	108
C 90 4	**S2**	**M2S**	156	378	373	891	119	234	962	238	129	146	134	119
C 90 4	**S3**	**M3S**	195	397.5	392.5	935	142	239	1031	246	160	158	160	142
C 90 4	**S3**	**M3L**	195	397.5	392.5	967	142	246	1058	253	160	158	160	142
C 90 4	**S4**	**M4**	258	429	424	1075	193	280	1184	298	226	210	217	193
C 90 4	**S4**	**M4LC**	258	429	424	1126.5	193	288	1209	306	226	210	217	193

C 90...P(IEC)

P

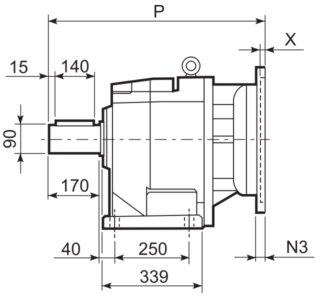
P
X
15
140
90
170
40
250
N3
339

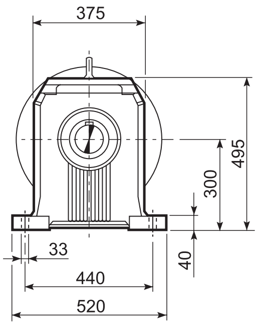
375
495
300
33
40
440
520

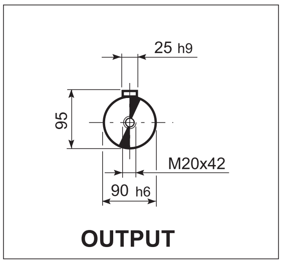
25 h9
95
M20x42
90 h6

OUTPUT

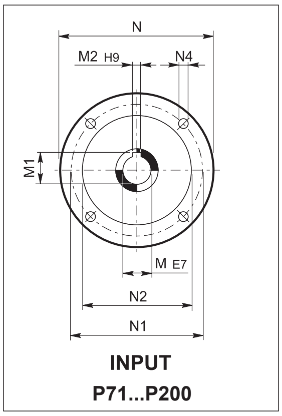
N
M2 H9
N4
M1
M E7
N2
N1

INPUT
P71...P200

F

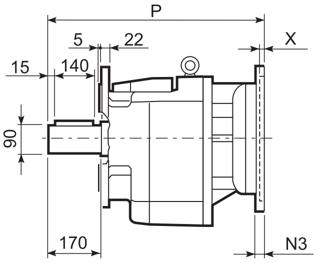
P
5
22
X
15
140
90
170
N3

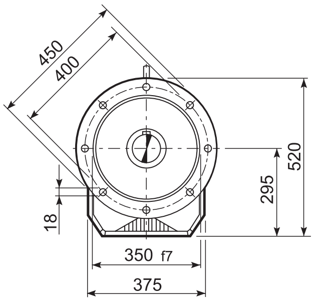
450
400
520
295
18
350 f7
375

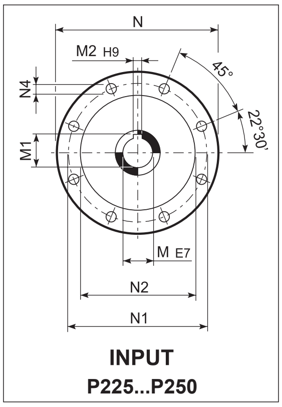
N
M2 H9
45°
N4
22°30'
M1
M E7
N2
N1

INPUT
P225...P250

		M	M1	M2	N	N1	N2	N3	N4	X	P	Kg
C 90 2/3	**P80**	19	21.8	6	200	165	130	—	M10x14.5	4	644.5	229
C 90 2/3	**P90**	24	27.3	8	200	165	130	—	M10x14.5	4	644.5	229
C 90 2/3	**P100**	28	31.3	8	250	215	180	—	M12x16	4.5	654.5	234
C 90 2/3	**P112**	28	31.3	8	250	215	180	—	M12x16	4.5	654.5	234
C 90 2/3	**P132**	38	41.3	10	300	265	230	16	14	5	691	236
C 90 2/3	**P160**	42	45.3	12	350	300	250	23	18	6	746.5	251
C 90 2/3	**P180**	48	51.8	14	350	300	250	23	18	6	746.5	251
C 90 2/3	**P200**	55	59.3	16	400	350	300	—	M16x25	7	771.5	272
C 90 2/3	**P225**	60	64.4	18	450	400	350	30	18	6	817	273
C 90 2/3	**P250**	65	69.4	18	550	500	450	30	18	6	847	295
C 90 4	**P63**	11	12.8	4	140	115	95	—	M8x19	4	707.5	236
C 90 4	**P71**	14	16.3	5	160	130	110	—	M8x16	4.5	707.5	236
C 90 4	**P80**	19	21.8	6	200	165	130	—	M10x14.5	4	727	238
C 90 4	**P90**	24	27.3	8	200	165	130	—	M10x14.5	4	727	238
C 90 4	**P100**	28	31.3	8	250	215	180	—	M12x16	4.5	737	242
C 90 4	**P112**	28	31.3	8	250	215	180	—	M12x16	4.5	737	242
C 90 4	**P132**	38	41.3	10	300	265	230	16	14	5	773.5	244
C 90 4	**P160**	42	45.3	12	350	300	250	23	18	5.5	824	248
C 90 4	**P180**	48	51.8	14	350	300	250	23	18	5.5	824	248

C 90...HS

P

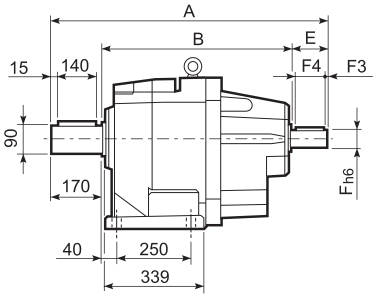
A
B
E
15
140
F4
F3
90
170
Fh6
40
250
339

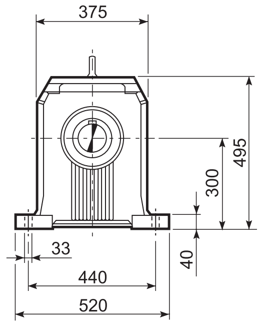
375
495
300
40
33
440
520

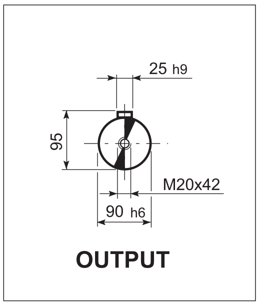
25 h9
95
M20x42
90 h6
OUTPUT

F

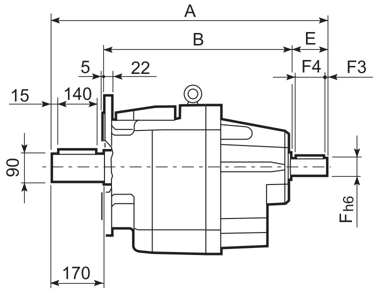
A
B
E
5
22
F4
F3
15
140
90
Fh6
170

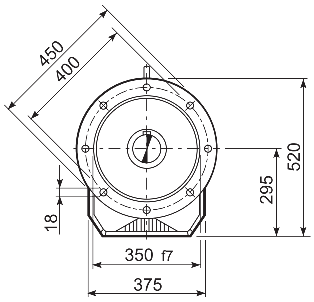
450
400
520
295
18
350 f7
375

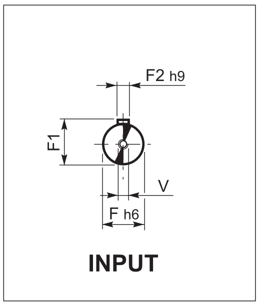
F2 h9
F1
V
F h6
INPUT

		A	B	E	F	F1	F2	F3	F4	V	Kg
C 90 2	**HS**	930.5	620.5	140	60	64	18	10	120	M16x36	273
C 90 3		930.5	620.5	140	60	64	18	10	120	M16x36	273
C 90 4		797	577	50	24	27	8	2.5	45	M8x19	240

C 100...M

P

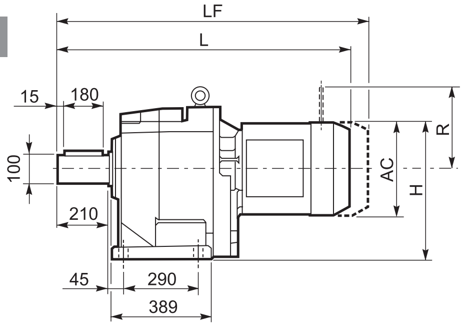
LF
L
15
180
100
210
45
290
389
AC
H
R

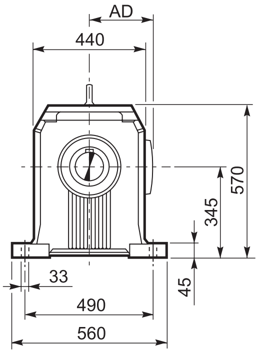
AD
440
570
345
45
33
490
560

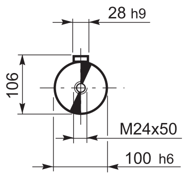
28 h9
106
M24x50
100 h6

OUTPUT

F

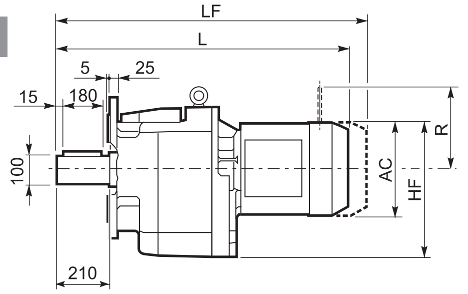
LF
L
5
25
15
180
100
210
AC
HF
R

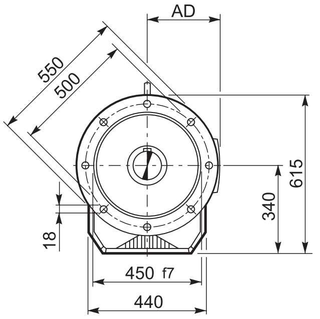
AD
550
500
615
340
18
450 f7
440

									M...FD M...FA		M...FD		M...FA	
			AC	H	HF	L	AD	Kg	LF	Kg	R	AD	R	AD
C 100 2/3	**S4**	**M4**	258	474	469	1087	193	392	1196	410	226	210	217	193
C 100 2/3	**S4**	**M4LC**	258	474	469	1122	193	400	1221	418	226	210	217	193
C 100 2/3	**S5**	**M5S**	310	500	495	1173.5	245	420	1313.5	450	266	245	247	245
C 100 2/3	**S5**	**M5L**	310	500	495	1217.5	245	436	1357.5	466	266	245	247	245
C 100 4	**S1**	**M1**	138	414	409	956.5	108	346	1027.5	348	103	135	124	108
C 100 4	**S2**	**M2S**	156	423	418	985.5	119	354	1056.5	357	129	146	134	119
C 100 4	**S3**	**M3S**	195	442.5	437.5	1029.5	142	358	1125.5	366	160	158	160	142
C 100 4	**S3**	**M3L**	195	442.5	437.5	1061.5	142	366	1152.5	373	160	158	160	142
C 100 4	**S4**	**M4**	258	474	469	1169.5	193	400	1278.5	418	226	210	217	193
C 100 4	**S4**	**M4LC**	258	474	469	1204.5	245	408	1303.5	426	226	210	217	193

C 100...P(IEC)

P

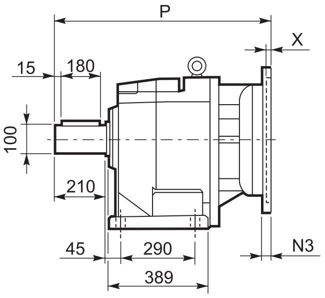
P
X
15
180
100
210
45
290
389
N3

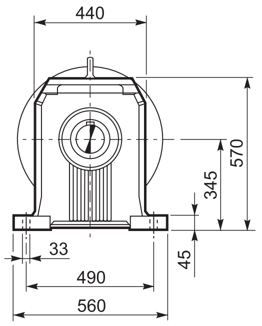
440
570
345
33
45
490
560

F

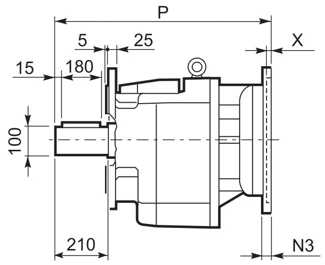
P
5
25
X
15
180
100
210
N3

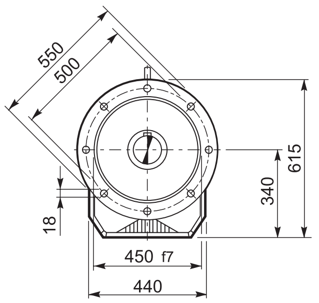
550
500
615
340
18
450 f7
440

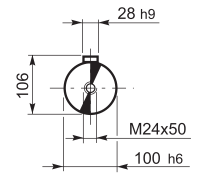
28 h9
106
M24x50
100 h6

OUTPUT

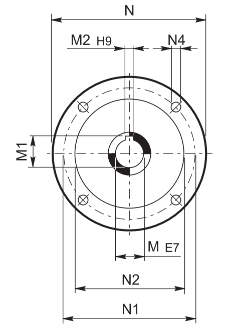
N
M2 H9
N4
M1
M E7
N2
N1

INPUT
P80...P200

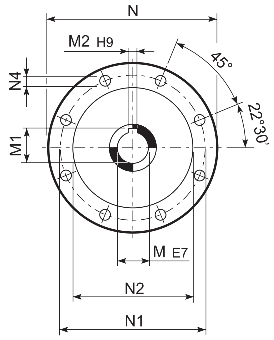
N
M2 H9
45°
N4
22°30'
M1
M E7
N2
N1

INPUT
P225...P280

		M	M1	M2	N	N1	N2	N3	N4	X	P	Kg
C 100 2/3	**P100**	28	31.3	8	250	215	180	—	M12x16	4.5	749.5	364
C 100 2/3	**P112**	28	31.3	8	250	215	180	—	M12x16	4.5	749.5	364
C 100 2/3	**P132**	38	41.3	10	300	265	230	16	14	5	786	367
C 100 2/3	**P160**	42	45.3	12	350	300	250	23	18	6	841.5	382
C 100 2/3	**P180**	48	51.8	14	350	300	250	23	18	6	841.5	382
C 100 2/3	**P200**	55	59.3	16	400	350	300	—	M16x25	7	866.5	403
C 100 2/3	**P225**	60	64.4	18	450	400	350	30	18	7	912	403
C 100 2/3	**P250**	65	69.4	18	550	500	450	30	18	7	942	426
C 100 2/3	**P280**	75	79.9	20	550	500	450	30	18	6	942	426
C 100 4	**P63**	11	12.8	4	140	115	95	—	M8x19	4	803	369
C 100 4	**P71**	14	16.3	5	160	130	110	—	M8x16	4.5	803	369
C 100 4	**P80**	19	21.8	6	200	165	130	—	M10x14.5	4	822.5	371
C 100 4	**P90**	24	27.3	8	200	165	130	—	M10x14.5	4	822.5	371
C 100 4	**P100**	28	31.3	8	250	215	180	—	M12x16	4.5	832.5	375
C 100 4	**P112**	28	31.3	8	250	215	180	—	M12x16	4.5	832.5	375
C 100 4	**P132**	38	41.3	10	300	265	230	16	14	5	869	377
C 100 4	**P160**	42	45.3	12	350	300	250	23	18	5.5	919.5	381
C 100 4	**P180**	48	51.8	14	350	300	250	23	18	5.5	919.5	381

C 100...HS

P

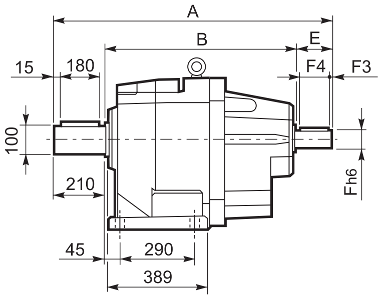
A
B
E
15
180
F4
F3
100
210
Fh6
45
290
389

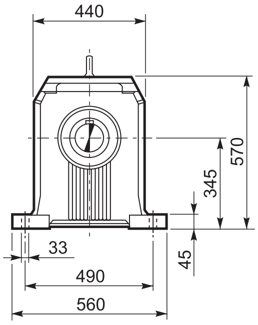
440
570
345
33
45
490
560

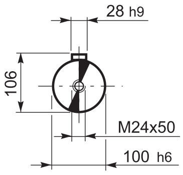
28 h9
106
M24x50
100 h6

OUTPUT

F

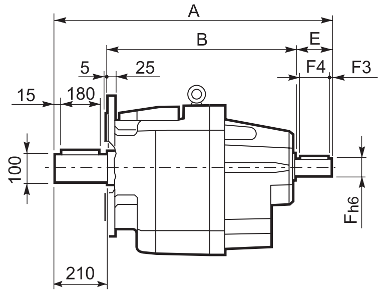
A
B
E
5
25
F4
F3
15
180
100
Fh6
210

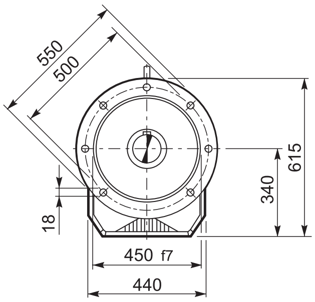
550
500
615
340
18
450 f7
440

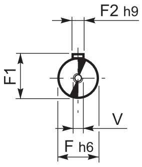
F2 h9
F1
V
F h6

INPUT

		A	B	E	F	F1	F2	F3	F4	V	Kg
C 100 2	**HS**	1025.5	676	140	60	64	18	10	120	M16x36	409
C 100 3		1025.5	676	140	60	64	18	10	120	M16x36	409
C 100 4		892	632	50	24	27	8	2.5	45	M8x19	372

31 KONSTRUKTIVE EIGENSCHAFTEN

Die wichtigsten konstruktiven Eigenschaften sind:
- Baueinheitensystem
- Kompaktheit
- universelle Montage
- hohe Wirkungsgrade
- niedriger Geräuschpegel
- einsatzgehärtete und gehärtete Zahnräder aus legiertem Stahl
- Nicht lackierte Aluminiumgehäuse bei den Größen 05, 10, 20 und 30; hochwiderstandsfähige und lackierte Gußgehäuse bei den anderen Größen
- Antriebs- und Abtriebswellen aus hochwiderstandsfähigem Stahl.

(C 26)

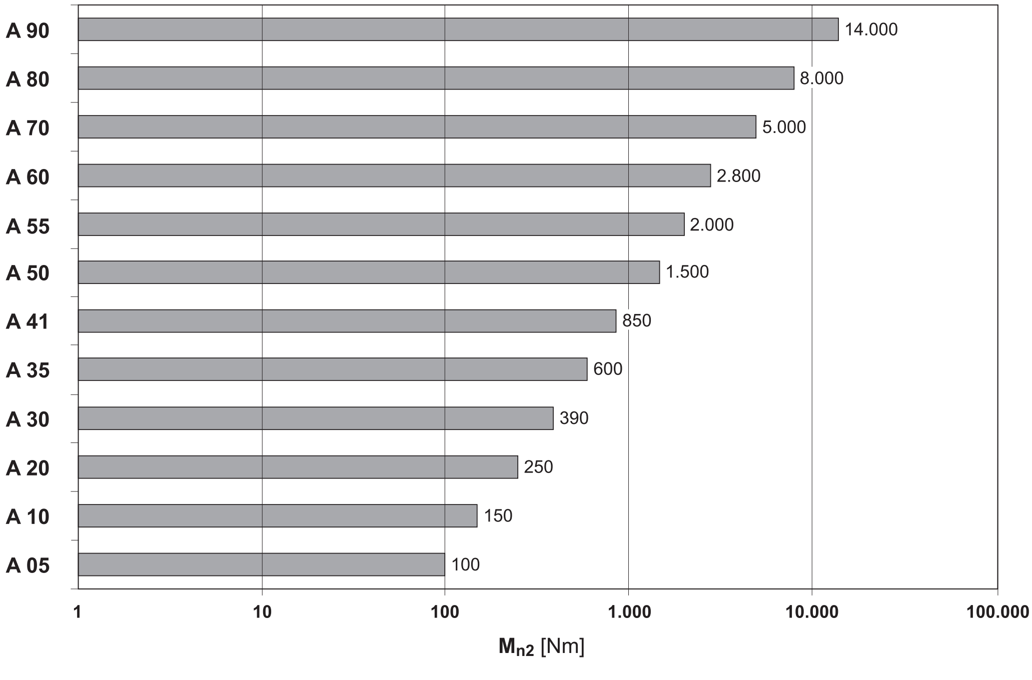

* Für eventuelle Begrenzungen bezüglich der Bauform QF siehe Kapitel “BAUFORMEN”.

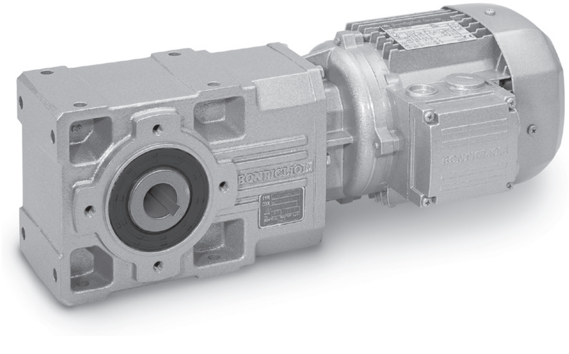

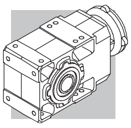

32 BAUFORMEN

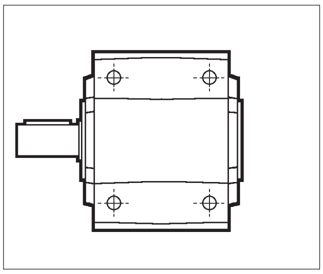

UR

Abtriebswelle mit einem Wellenende

A 05 ... A 90

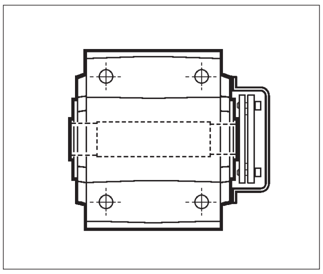

US

Abtriebshohlwelle und Schrumpfscheibe

A 05 ... A 90

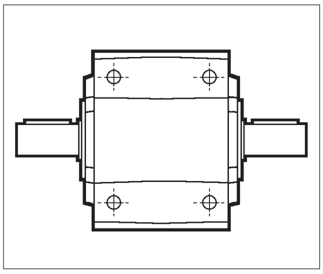

UD

Abtriebswelle mit zwei Wellenenden

A 05 ... A 90

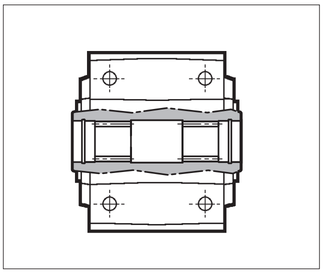

UV

Hohlwelle mit Vielkeilverzahnung DIN 5480

A 20 ... A 60

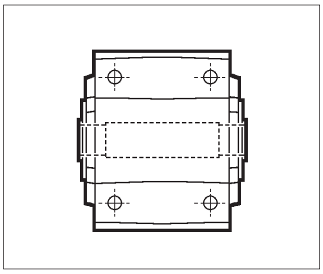

UH

Abtriebshohlwelle mit Passfedernut

A 05 ... A 90

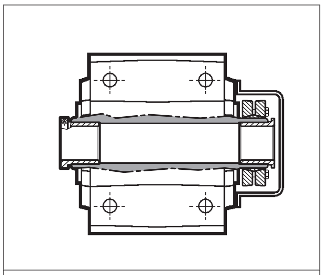

QF (Quick-fit)

Hohlwelle mit Adapterbuchsen und Schrumpfscheibe

A 10 ... A 60

$M_{n2\ max}$ [Nm]	
A 35 QF35	550
A 55 QF55	1900

Bauformen mit angeschraubten Flansch

Die angegebenen Bilder zeigen die an den Grundbauformen anbaubaren Flansche und ihre Positionerung (①,②).

UR F1... **UR F2...**

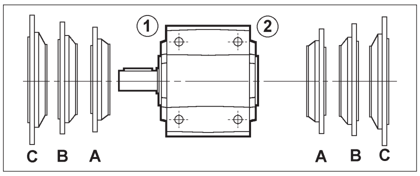

UD F1... **UD F2...**

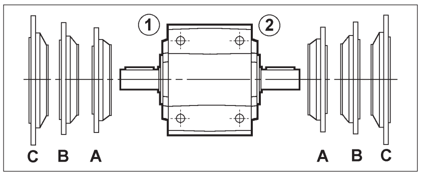

UH... F1... **UH... F2...**

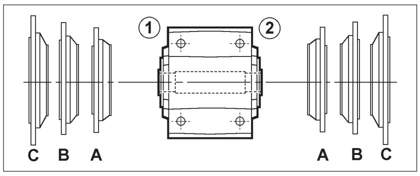

US F1... **US F2...**

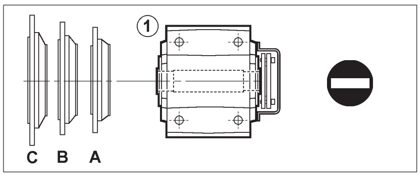

UV F1... **UV F2...**

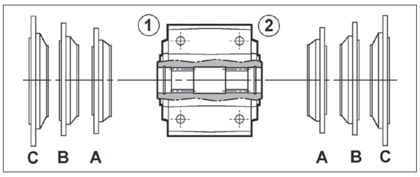

QF...

⛔

33 BEZEICHNUNG

GETRIEBE

A 35 2 UH40 F1A 33.2 S3 VA .....

OPTIONEN

EINBAULAGEN
B3 (Standard), **B6**, **B7**, **B8**, **VA**, **VB**

BEZEICHNUNG DER ANTRIEBSSEITE

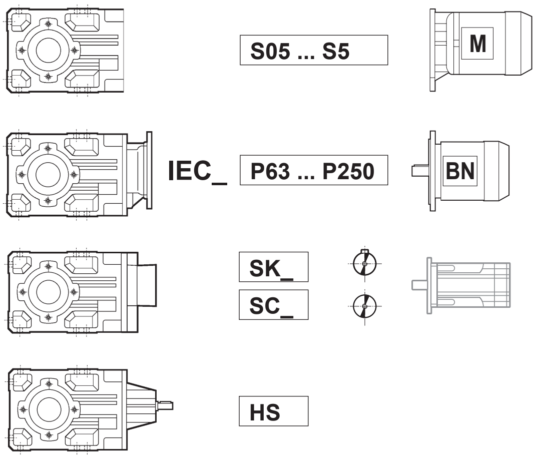

ÜBERSETZUNG

GRÖSSE UND LAGE DES ANTRIEBSFLANSCHS
(angeben nur wenn angefragt)

F = Ausführung mit Flansch
1, **2** = Flanschlage
A, **B**, **C** = Flanschgröße

BAUFORM

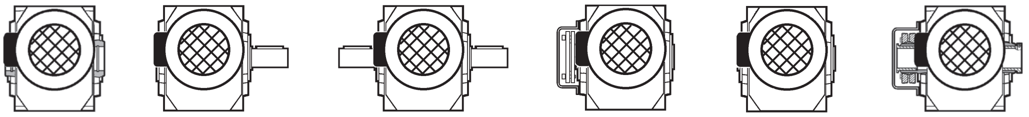

UH_ **UR** (A 05...A 90) **UD** (A 05...A 90) **US** (A 05...A 90) **UV** (A 20...A 60) **QF** (A 10...A 60)

A 05	**A 10**	**A 20**	**A 30**	**A 35**	**A 41**	**A 50**	**A 55**	**A 60**	**A 70**	**A 80**	**A 90**
UH25	**UH25**	**UH30**	**UH35**	**UH40**	**UH45**	**UH50**	**UH60**	**UH60**	**UH70**	**UH80**	**UH90**
—	UH30	UH35	UH40	UH35	UH40	UH55	UH50	UH70	UH80	UH90	UH100

GETRIEBESTUFEN
2 (A 05...A 60), **3** (A 20...A 90), **4** (A 50...A 90)

GETRIEBEBAUGRÖSSE
05, **10**, **20**, **30**, **35**, **41**, **50**, **55**, **60**, **70**, **80**, **90**

TYP: **A** = Kegelradgetriebe

MOTOR | BREMSE

M 1LA 4 230/400-50 IP54 CLF ..... **W FD** 7.5 R SB 220 SA .....

OPTIONEN

BREMSVERSORGUNG

GLEICHRICHTERTYP
AC/DC
NB, **SB**, **NBR**, **SBR**

BREMSENHANDLÜFTUNG
R, **RM**

BREMSMOMENT

BREMSENTYP
FD (G.S. Bremse)
FA (W.S. Bremse)

KLEMMENKASTENLAGE
W (default), **N**, **E**, **S**

BAUFORM
— (Kompaktmotor)
B5 (IEC Motor)

ISOLIERUNGSKLASSE
CL F Standard
CL H Option

SCHUTZART
IP55 Standard (IP54 - Bremssmotor)

SPANNUNG - FREQUENZ

POLZAHL
2, **4**, **6**, **2/4**, **2/6**, **2/8**, **2/12**, **4/6**, **4/8**

MOTOR-BAUGRÖSSE
0B ... 5LA (Kompaktmotor)
63A ... 250MA (IEC - Motor)

MOTORTYP
M = Dreiphasen Kompaktmotor
BN = Dreiphasen IEC Motor

33.1 Getriebe Optionen

AL, AR

Auf Anfrage kann das Getriebe mit einer Rücklaufsperre ausgerüstet werden, um die Drehung der Abtriebswelle in nur einer Richtung zu ermöglichen. In der folgende Tabelle werden die Getriebe angegeben, die mit einer Rücklaufsperre geliefert werden können. Das Rücklaufsperre Gerät RB Option ausschließen.

(C 27)

A 30 2*	A 35 2* ⊖ (5.4_11.8)	A 41 2 ⊖ (5.2; 10.1)	A 50 3	A 55 3	A 60 3	A 70 3	A 80 3	A 90 3
			A 50 4	A 55 4	A 60 4	A 70 4	A 80 4	A 90 4

* Servoflansche Typ S_60A, S_60B und S_80A stehen nicht mit Rücklaufsperre zur Verfügung.

Bei Bestellung bitte die gewünschte freie Drehrichtung durch die Option AL oder AR (Tabelle C27) in der Getriebe- oder Motorbezeichnung angeben.

⚠ HINWEIS: Sollte ein Auslösen der Rücklaufsperre wiederholt erforderlich sein, muss kontrolliert werden, dass das Drehmoment am Abtrieb, das sich aus der Applikation ergibt, 70% des Nenndrehmoments M_{n2} für dieses spezifische Getriebe nicht übersteigt.

(C 28)

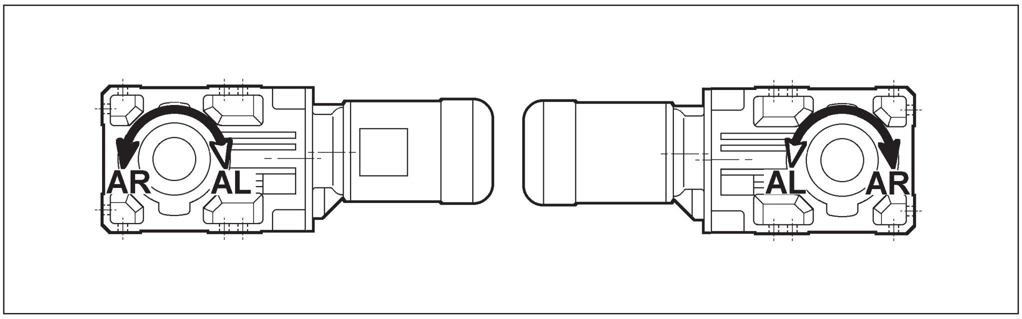

SO

Die Getriebetypen A05, A10, A20, A30, A35 und A41, die normalerweise inklusiv Schmiermittel geliefert werden, werden ohne Öl geliefert.

LO

Die Getriebe A50, A55, A60, A70, A80 und A90, die gewöhnlich ohne Schmiermittel geliefert werden, werden in Übereinstimmung mit der Einbaulage mit dem standardmäßigen von BONFIGLIOLI RIDUTTORI verwendeten synthetischen Schmierstoff gefüllt.

DV

2 Wellendichtringe auf der eintreibenden Welle.(Nur für Kompaktgetriebemotoren).

VV

Wellendichtringe aus Fluor-Elastomer auf der eintreibenden Welle.

PV

Alle Wellendichtringe aus Fluor-Elastomer.

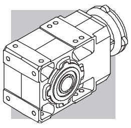

TKL

Für die Getriebe der Größen A70...A90 stehen Taconite Dichtung an der Abtriebswelle, die in Umgebungen mit hohem Aufkommen an abrasiven Stäuben eingesetzt werden können, zur Verfügung.
Diese bestehen aus einer Kombination von Dichtringen, Labyrinthdichtungen und Fettkammern.
Das Fett muss durch regelmäßige Wartung geprüft werden.
Bei dieser Option kommen nur Wellendichtringe aus Fluor-Elastomer zum Einsatz.
Für die Einbaulagen B6 wenden Sie sich bitte an den technischen Service von Bonfiglioli Riduttori.

HDB

Für Anwendungen, die durch besonders hohe Radialkräfte gekennzeichnet sind und für die die zulässigen Radiallasten der Getriebe in Standardausführung nicht ausreichen, können einige Getriebe mit erhöhter zulässiger Radiallast durch Angabe der Option HDB bestellt werden. Die Option ist für die Getriebe der Größen A10 bis A50, mit einseitiger oder zweiseitiger Abtriebswelle verfügbar. Die zulässigen Radiallasten der Getriebe in verstärkter Ausführung sind in der nachfolgenden Tabelle angegeben. Die Werte beziehen sich auf Lasten die in der Mitte der Abtriebswelle angreifen.

(C 29)

HDB	R_{N2}					
	A 10	**A 20**	**A 30**	**A 35**	**A 41**	**A 50**
n_1 = 2800	**5500 N**	**6200 N**	**9600 N**	**12000 N**	**15000 N**	**20000 N**
⚠			8970 N @ i=5.4	10200 N @ i=5.4 10600 N @ i=6.4 11000 N @ i=7.0	11500 N @ i=5.2 12700 N @ i=7.1 13300 N @ i=8.3 13700 N @ i=9.2	19000 N @ i=7.7
n_1 = 1400	**5500 N**	**6200 N**	**9600 N**	**12000 N**	**15000 N**	**20000 N**
n_1 = 900	**5500 N**	**6200 N**	**9600 N**	**12000 N**	**15000 N**	**20000 N**
n_1 = 500	**5500 N**	**6200 N**	**9600 N**	**12000 N**	**15000 N**	**20000 N**

Durch die verstärkte Lagerung sind auch höhere Axiallasten zulässig, und zwar:

$$\boxed{A_{N2} = 0.35 \times R_{n2}} \qquad (24)$$

Bei Applikationen ohne Radiallasten beträgt die Axialkraft:

$$\boxed{A_{N2} = 0.70 \times R_{n2}} \qquad (25)$$

Treten gleichzeitig an beiden Wellenenden der Abtriebswelle Kräfte auf, dann empfiehlt sich zur Prüfung des jeweiligen Falls die Kontaktaufnahme mit dem technischen Kundendienst von Bonfiglioli.

RB

Die Getriebe der Bauarten A10, A20, A30, A35, A41, A50, A55 und A60, deren Lieferung in der Regel mit Winkelspiel-Standardwerten erfolgt, werden in diesem Fall mit reduzierten Winkelspielwerten geliefert (ausschließt Getriebe Optionen AL und AR in diesem Absatz beschriebenen). Die entsprechenden Winkelspielwerte sind in der nachstehenden Tabelle aufgeführt.

(C 30)

		standard		RB	
A05	i =	5.5_12.3 - ⊖(10.6)	10.6_91.6 - ⊖(12.3)	—	
	φ [']	**28**	**18**		
A10	i =	5.5_12.3 - ⊖(10.6)	10.6_91.6 - ⊖(12.3)	5.5_12.3 - ⊖(10.6)	10.6_91.6 - ⊖(12.3)
	φ [']	**27**	**17**	**12**	**8**
A20	i =	5.4_12 - ⊖(10.3)	10.3_380.9 - ⊖(12)	5.4_12 - ⊖(10.3)	10.3_380.9 - ⊖(12)
	φ [']	**23**	**15**	**11**	**7**
A30	i =	5.4_11.8 - ⊖(10.5)	10.5_400.8 - ⊖(11.8)	5.4_11.8 - ⊖(10.5)	10.5_400.8 - ⊖(11.8)
	φ [']	**22**	**15**	**10**	**7**
A35	i =	5.4_11.8	13.1_393.2	5.4_11.8	13.1_393.2
	φ [']	**20**	**11**	**9**	**6**
A41	i =	5.2_11.7 - ⊖(10.1)	10.1_376.8 - ⊖(11.7)	5.2-11.7 - ⊖(10.1)	10.1_376.8 - ⊖(11.7)
	φ [']	**19**	**13**	**9**	**6**
A50	i =	7.7_778.2		7.7_778.2	
	φ [']	**16**		**7**	
A55	i =	4.9_19.2	23.8_793	4.9_19.2	23.8_793
	φ [']	**17**	**11**	**8**	**6**
A60	i =	7.9_20.6	25.7_755.4	7.9_20.6	25.7_755.4
	φ [']	**12**	**9**	**5**	**4**
A70	i =	9.4_21.3	23.5_1715	—	
	φ [']	**14**	**12**		
A80	i =	9.8_20.9	22.6_1558	—	
	φ [']	**13**	**11**		
A90	i =	9.7_21	22.3_1632	—	
	φ [']	**12**	**10**		

Für die Lieferzeiten, wenden Sie sich, bitte, an das Vertriebsnetz Bonfiglioli

OBERFLÄCHENSCHUTZ

Wenn keine besondere Korrosionsschutzklasse gefordert ist, ist die lackierte Oberfläche des Getriebes mindestens mit einem Schutz gegen Korrosion der Klasse C2 nach UNI EN ISO 12944-2 geschützt.
Für eine bessere Witterungsbeständigkeit können die Getriebe, durch eine Lackierung des ganzen Getriebes, mit einem Oberflächenschutz der Klassen **C3** und **C4** geliefert werden.

(C 31)

OBERFLÄCHENSCHUTZ	Typische Umgebungen	Maximale Oberflächen-temperatu	Korrosionsschutzklasse nach UNI EN ISO 12944-2
C3	Stadt- und Industrieumgebung mit bis zu 100% relativer Luftfeuchtigkeit (mittlere Luftverschmutzung)	120°C	C3
C4	Industrie- und Küstengebiete und Chemieanlagen mit bis zu 100% relativer Luftfeuchtigkeit (hohe Luftverschmutzung)	120°C	C4

Getriebe mit einem optionalen Korrosionsschutz der Klassen **C3** oder **C4** sind in einer Auswahl von Farben verfügbar. Wenn keine spezielle Farbe gefordert ist, (siehe Option „Lackierung“) ist der Decklack in RAL 7042. Unsere Getriebe können auch mit Oberflächenschutz der Klasse **C5** nach UNI EN ISO 12944-2 versehen werden. Für weitere technische Informationen wenden Sie bitte an unseren Technischen Service.

LACKIERUNG

Getriebe mit Oberflächenschutz der Klasse C3 oder C4, sind in den, in der folgenden Liste aufgelisteten Farben, verfügbar.

(C 32)

LACKIERUNG	Farbe	RAL Nummer
RAL7042*	Traffic Grey A	7042
RAL5010	Gentian Blue	5010
RAL9005	Jet Black	9005
RAL9006	White Aluminium	9006
RAL9010	Pure White	9010

* Die Getriebe werden in dieser Standardfarbe geliefert, wenn keine andere Farbe angegeben ist.

Hinweis – Die Option “Lackierung” kann nur im Zusammenhang mit dem Oberflächenschutz spezifiziert werden.

NACHWEISE

AC - Konformitätsbescheinigung Dokument mit dessen Ausstellung die Konformität des Produkts mit dem Auftrag, und dessen Konstruktion in Konformität mit den vom Qualitätsmanagementsystem von Bonfiglioli Riduttori vorgesehenen Standardfertigungs- und -kontrollverfahren bescheinigt wird.

CC – Prüfzeugnis

Die Bestellung führt zur Durchführung von Kontrollen der Konformität mit dem Auftrag, allgemeinen Sichtkontrollen und instrumentalen Prüfungen der Passmaße. Des Weiteren werden allgemeine Betriebskontrollen bei Leerlauf sowie Prüfungen der Funktionalität der Dichtungen bei Stillstand und während des Betriebs durchgeführt. Die Prüfung wird anhand einer Stichprobe des Versandloses durchgeführt.

33.2 Zubehör

siehe Abschnitt 44 des Kataloges.

33.3 Optionen Motoren

AL, AR

Die Option Rücklaufsperre steht auch für M Motoren zur Verfügung. Die Motor-Option ist aber nicht zusammen mit der gleichnamigen Getriebe-Option verwendbar. Die folgende Tabelle zeigt die freie Drehrichtung des Getriebemotors, anhand welcher die Option entsprechend gewählt werden muss.

(C 34)

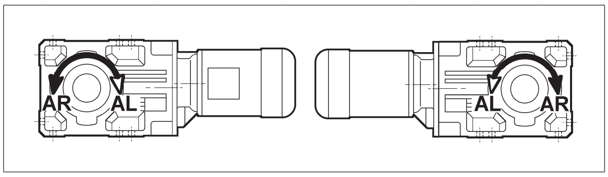

2x	A 05	A 10	A 20	A 30	A 35	A 41	A 50	A 60
3x	A 60	A 70	A 80	A 90				
4x	A 50	A 55						

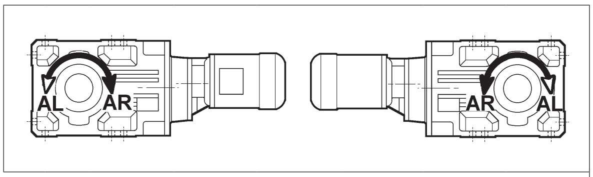

2x	A 55					
3x	A 20	A 30	A 35	A 41	A 50	A 55
4x	A 60	A 70	A 80	A 90		

Weitere Informationen zu Optionen, finden Sie im Abschnitt “Elektromotoren”.

34 EINBAULAGEN UND LAGE DES KLEMMENKASTENS

Die Angaben zur Lage des Klemmenkastens beziehen sich auf das von der Lüfterseite her betrachtete Getriebe. Die Standardorientierung ist schwarz hervorgehoben (W).

Winkellage des Handlüfterhebels.

Bei Bremsmotoren wird der Handlüfterhebel (auf Anfrage) standardmäßig auf 90° gegenüber des Klemmkastens (AB- Anordnung) geliefert; wird eine andere Anordnung verlangt, muß dies bei der Bestellung durch die geeignete Option angegeben werden.

(C 33)

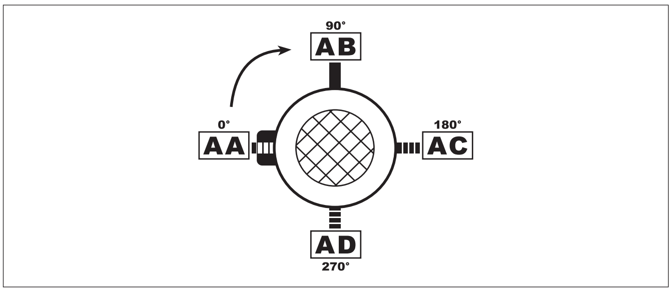

A ...

B3

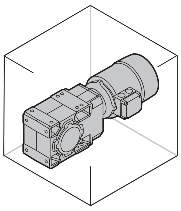

_S

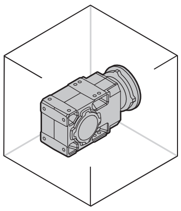

_P(IEC) _SK / _SC

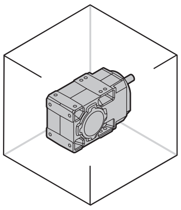

_HS

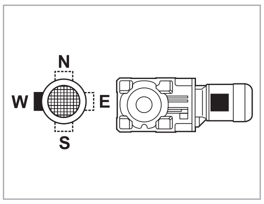

B6

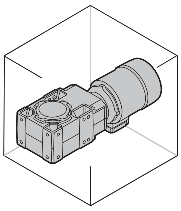

_S

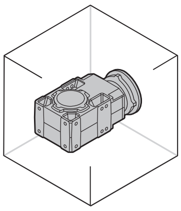

_P(IEC) _SK / _SC

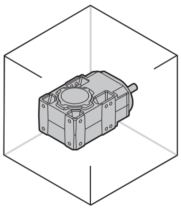

_HS

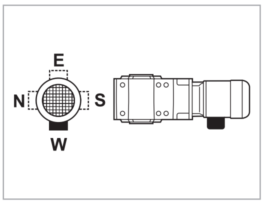

B7

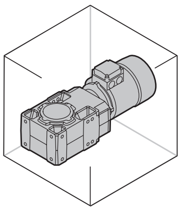

_S

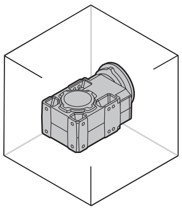

_P(IEC) _SK / _SC

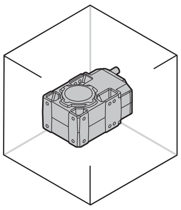

_HS

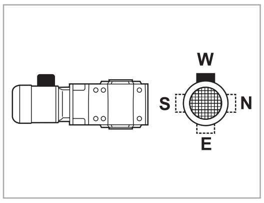

B8

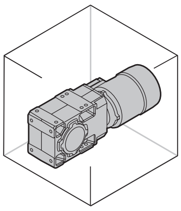

_S

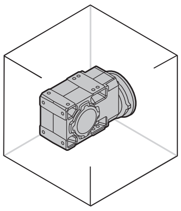

_P(IEC) _SK / _SC

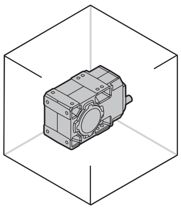

_HS

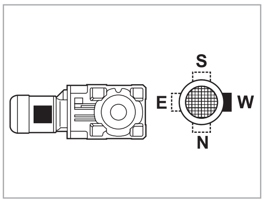

VA

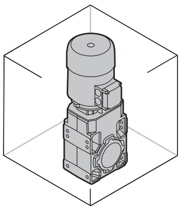

_S

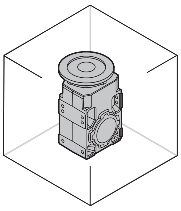

_P(IEC) _SK / _SC

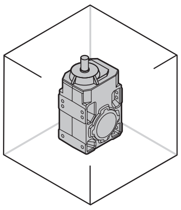

_HS

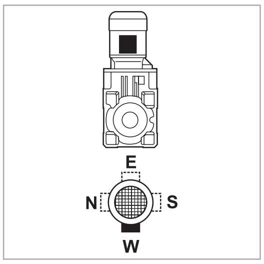

VB

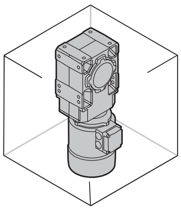

_S

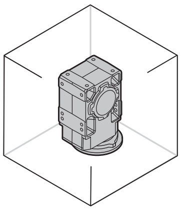

_P(IEC) _SK / _SC

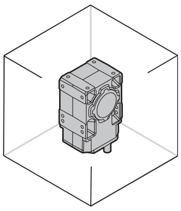

_HS

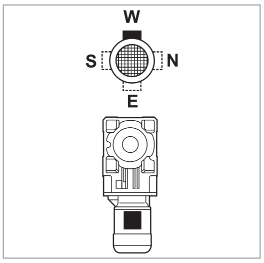

W = Default

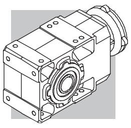

35 RADIALKRÄFTE

Die mit den Antriebs- und/oder Abtriebswellen des Getriebes verbundenen Antriebsorgane bilden Kräfte, die in radiale Richtung auf die Welle selbst wirken.
Das Ausmaß dieser Kräfte muß mit der Festigkeit des Systems aus Getriebewelle/-lager kompatibel sein, insbesondere muß der absolute Wert der auftretenden Belastung (R_{c1} für Antriebswelle und R_{c2} für Abtriebswelle) unter dem in den Tabellen der Technischen Daten angegebenen Nennwert (R_{n1} für Antriebswelle und R_{n2} für Abtriebswelle) liegen.
In den nachstehenden Formeln bezieht sich die Angabe (1) auf die Maße der Antriebswelle, die Angabe (2) auf die Abtriebswelle.
Die von einem externen Antrieb erzeugte Kraft kann, recht genau, anhand der nachstehenden Formel berechnet werden:

$$R_{c1}\left[N\right] = \frac{2000 \cdot M_1\left[Nm\right] \cdot K_r}{d\left[mm\right]} \quad ; \quad R_{c2}\left[N\right] = \frac{2000 \cdot M_2\left[Nm\right] \cdot K_r}{d\left[mm\right]} \qquad (26)$$

(C 35)

M_1 [Nm]	Drehmoment an der Antriebswelle
M_2 [Nm]	Drehmoment an der Abtriebswelle
d [mm]	Teilkreisdurchmesser des Bauteils, das auf der Abtriebswelle montiert ist
K_r = 1	Kettenantrieb

K_r = 1,25	Zahnradantrieb
K_r = 1,5	Antrieb über Keilriemen
K_r = 2,0	Antrieb über Flachriemen

In Abhängigkeit zum Kraftanangriffspunkt an der Welle erfolgt die Kontrolle hinsichtlich der Kompatibilität in unterschiedlicher Weise und insbesondere:

(C 36)

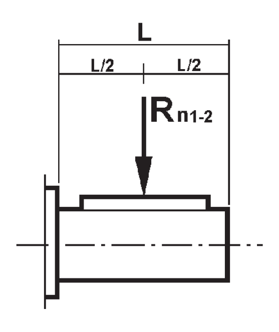

(C 37)

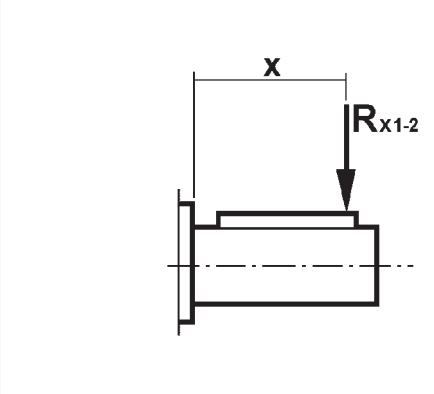

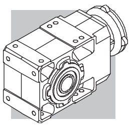

a) Kraftangriffspunkt in der Mitte, Tab. (C36)

Der zuvor errechnete Wert muß mit dem im Katalog angegebenen Nennwert verglichen werden. Es muß sich folgendes ergeben:

$Rc1 \leq Rn1$ [Antriebswelle]

oder

$Rc2 \leq Rn2$ [Abtriebswelle]

b) Von der Mitte versetzter Kraftangriffspunkt Tab. (C37)

Der auf einer Distanz “x” vom Wellenansatz liegende Kraftangriffspunkt erfordert eine erneute Berechnung des für diesen Abstand zulässigen Werts.
Der neue Wert wird mit den Symbolen Rx1 (Antrieb) und Rx2 (Abtrieb) gekennzeichnet und unter Anwendung der nachstehenden Faktorenberechnung aus den Katalog- werten Rn1 und Rn2:

$$\boxed{\frac{a}{b+x}} \quad (27)$$

(C 38)

	Getriebekonstanten					
	Abtriebswelle			Antriebswelle		
	a	b	c	a	b	c
A 05 2	116	86	450	—	—	—
A 10 2	123	101	600	21	1	300
A 20 2	150	120	750	40	20	350
A 20 3	150	120	750	21	1	300
A 30 2	168	138	900	38.5	18.5	350
A 30 3	168	138	900	21	1	300
A 35 2	182.5	147.5	950	38.5	18.5	350
A 35 3	182.5	147.5	950	21	1	300
A 41 2	198	158	1050	49.5	24.5	450
A 41 3	198	158	1050	40	20	350
A 50 2 - A 50 3	242.5	201.5	1300	49.5	24.5	450
A 50 4	242.5	201.5	1300	38.5	18.5	350
A 55 2 - A 55 3	231.5	179	1300	49.5	24.5	450
A 55 4	231.5	179	1300	38.5	18.5	350
A 60 2 - A 60 3	242.5	190	1550	55.5	25.5	600
A 60 4	242.5	190	1550	49.5	24.5	450
A 70 3	295.5	230.5	1900	86	31	1000
A 70 4	295.5	230.5	1900	49.5	24.5	450
A 80 3	345	280	2400	86	31	1000
A 80 4	345	280	2400	49.5	24.5	450
A 90 3	432	327	3000	116	46	1400
A 90 4	432	327	3000	49.5	24.5	450

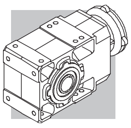

Das Kontrollverfahren zieht die nachstehend beschriebenen Schritte nach sich.

ANTRIESBWELLE

1. Berechnung von:

$$R_{x1} = R_{n1} \cdot \frac{a}{b+x} \tag{28}$$

HINWEIS unter der Bedingung, daß:

$$\frac{L}{2} \le x \le c \tag{29}$$

Dies als Voraussetzung, muß sich folgendes ergeben:

$$R_{c1} \le R_{x1} \tag{30}$$

ABTRIEBSWELLE

1. Berechnung von:

$$R_{x2} = R_{n2} \cdot \frac{a}{b+x} \tag{31}$$

HINWEIS unter der Bedingung, daß:

$$\frac{L}{2} \le x \le c \tag{32}$$

Dies als Voraussetzung, muß sich folgendes ergeben:

$$R_{c2} \le R_{x2} \tag{33}$$

36 AXIALKRÄFTE, A_{n1}, A_{n2}

Die Werte der zulässigen, auf die Antriebswelle [A_{n1}] und auf die Abtriebswelle [A_{n2}] einwirkenden Axialkräfte können unter Bezugnahme auf den jeweiligen Wert der Radialkraft [R_{n1}] und [R_{n2}] anhand der nachstehenden Angaben berechnet werden:

$$A_{n1} = R_{n1} \cdot 0.2 \qquad A_{n2} = R_{n2} \cdot 0.2 \tag{34}$$

Die so errechneten Werte der zulässigen Axialkräfte beziehen sich auf den Fall, in dem die Axialkräfte gleichzeitig mit den Nennradialkräften auftreten.
Nur im Fall, dass keine Radialbelastung auf die Getriebewelle wirkt, ist der Wert der zulässigen Axialbelastung [A_n] gleich 50% der zulässigen Radialbelastung [R_n] bezogen auf die gleiche Welle.
Bei sehr hohen Axialkräften oder stark erhöhten Radialkräften, wird im Hinblick auf eine genaue Kontrolle empfohlen, sich mit dem Technischen Kundendienst der Bonfiglioli Riduttori in Verbindung zu setzen.

37 WELLENDREHRICHTUNG

Die in der folgende Tabelle gezeigten Bilder zeigen die Standarddrehrichtungen der 2-, 3- und 4-stufigen Kegelstirnradgetrieben.

(C 39)

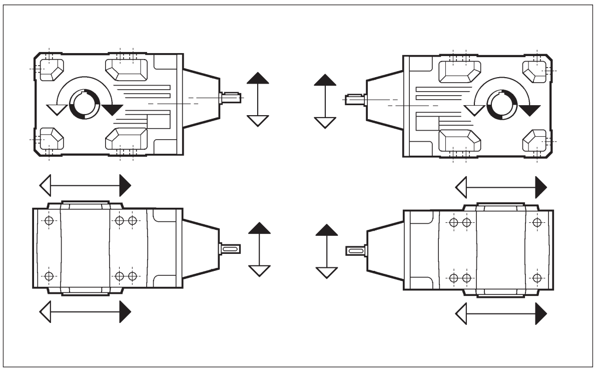

2x	A 05	A 10	A 20	A 30	A 35	A 41	A 50	A 60
3x	A 60	A 70	A 80	A 90				
4x	A 50	A 55						

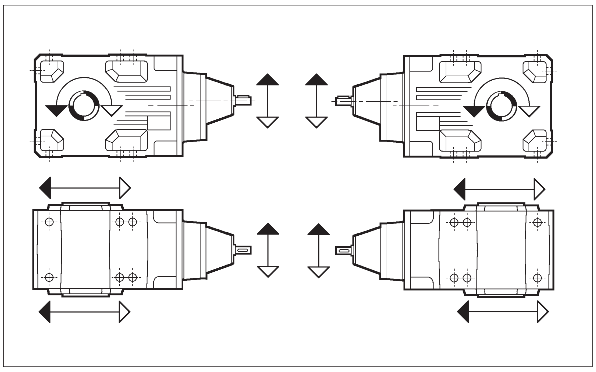

2x	A 55					
3x	A 20	A 30	A 35	A 41	A 50	A 55
4x	A 60	A 70	A 80	A 90		

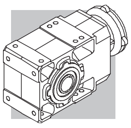

0.09 kW

n_2 min^{-1}	M_2 Nm	S	i	R_{n2} N	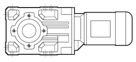			
0.51	1492	3.4	1715	50000			**A704_1715 P63 BN63A6**	309
1.1	677	2.2	778.2	20000			**A504_778.2 P63 BN63A6**	297
1.2	616	2.4	707.9	20000			**A504_707.9 P63 BN63A6**	297
1.4	549	2.7	631.2	20000			**A504_631.2 P63 BN63A6**	297
1.5	499	3.0	574.2	20000			**A504_574.2 P63 BN63A6**	297
1.7	461	3.3	529.5	20000			**A504_529.5 P63 BN63A6**	297
2.2	356	1.0	400.8	9600	**A303_400.8 S05 M05A6**	284	**A303_400.8 P63 BN63A6**	285
2.6	302	1.7	339.3	12000	**A353_339.3 S05 M05A6**	288	**A353_339.3 P63 BN63A6**	289
3.0	259	3.3	291.7	15000	**A413_291.7 S05 M05A6**	292	**A413_291.7 P63 BN63A6**	293
3.5	221	2.7	248.1	12000	**A353_248.1 S05 M05A6**	288	**A353_248.1 P63 BN63A6**	289
4.1	193	2.1	216.6	9600	**A303_216.6 S05 M05A6**	284	**A303_216.6 P63 BN63A6**	285
4.9	159	1.6	178.3	6200	**A203_178.3 S05 M05A6**	280	**A203_178.3 P63 BN63A6**	281
5.8	134	2.8	150.7	9600	**A303_150.7 S05 M05A6**	284	**A303_150.7 P63 BN63A6**	285
6.8	115	2.2	129.1	6200	**A203_129.1 S05 M05A6**	280	**A203_129.1 P63 BN63A6**	281
8.1	97	2.5	109.2	6200	**A203_109.2 S05 M05A6**	280	**A203_109.2 P63 BN63A6**	281
9.6	84	1.5	91.6	5500	**A102_91.6 S05 M05A6**	276	**A102_91.6 P63 BN63A6**	277
11.5	70	2.1	76.4	5500	**A102_76.4 S05 M05A6**	276	**A102_76.4 P63 BN63A6**	277
13.3	61	2.5	65.9	5500	**A102_65.9 S05 M05A6**	276	**A102_65.9 P63 BN63A6**	277
15.0	54	2.8	58.6	5500	**A102_58.6 S05 M05A6**	276	**A102_58.6 P63 BN63A6**	277
17.2	47	3.2	51.3	5500	**A102_51.3 S05 M05A6**	276	**A102_51.3 P63 BN63A6**	277
19.4	42	2.4	45.4	4250	**A052_45.4 S05 M05A6**	273	**A052_45.4 P63 BN63A6**	273
21.5	38	2.7	40.9	4120	**A052_40.9 S05 M05A6**	273	**A052_40.9 P63 BN63A6**	273
25.1	32	3.1	35.1	3950	**A052_35.1 S05 M05A6**	273	**A052_35.1 P63 BN63A6**	273
27.3	30	3.4	32.2	3850	**A052_32.2 S05 M05A6**	273	**A052_32.2 P63 BN63A6**	273
31	26	3.8	28.6	3720	**A052_28.6 S05 M05A6**	273	**A052_28.6 P63 BN63A6**	273
35	23	4.4	25.5	3590	**A052_25.5 S05 M05A6**	273	**A052_25.5 P63 BN63A6**	273
37	22	4.6	23.8	3520	**A052_23.8 S05 M05A6**	273	**A052_23.8 P63 BN63A6**	273
41	19.6	5.3	21.4	3410	**A052_21.4 S05 M05A6**	273	**A052_21.4 P63 BN63A6**	273
47	17.1	5.9	18.6	3270	**A052_18.6 S05 M05A6**	273	**A052_18.6 P63 BN63A6**	273
53	15.1	6.8	16.4	3150	**A052_16.4 S05 M05A6**	273	**A052_16.4 P63 BN63A6**	273
63	12.8	7.8	13.9	2990	**A052_13.9 S05 M05A6**	273	**A052_13.9 P63 BN63A6**	273
72	11.3	8.8	12.3	2880	**A052_12.3 S05 M05A6**	273	**A052_12.3 P63 BN63A6**	273
83	9.7	10.3	10.6	2740	**A052_10.6 S05 M05A6**	273	**A052_10.6 P63 BN63A6**	273
92	8.8	11.3	9.6	2670	**A052_9.6 S05 M05A6**	273	**A052_9.6 P63 BN63A6**	273
103	7.8	13.2	8.5	2570	**A052_8.5 S05 M05A6**	273	**A052_8.5 P63 BN63A6**	273
122	6.6	15.1	7.2	2440	**A052_7.2 S05 M05A6**	273	**A052_7.2 P63 BN63A6**	273
139	5.8	17.8	6.3	2340	**A052_6.3 S05 M05A6**	273	**A052_6.3 P63 BN63A6**	273
161	5.0	19.9	5.5	2230	**A052_5.5 S05 M05A6**	273	**A052_5.5 P63 BN63A6**	273

0.12 kW

n_2 min^{-1}	M_2 Nm	S	i	R_{n2} N	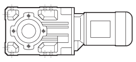			
0.51	2012	2.5	1715	50000			**A704_1715 P63 BN63B6**	309
0.55	1857	2.7	1583	50000			**A704_1583 P63 BN63B6**	309
0.65	1579	3.2	1346	50000			**A704_1346 P63 BN63B6**	309
0.70	1457	3.4	1242	50000			**A704_1242 P63 BN63B6**	309

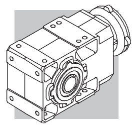

0.12 kW

n_2 min^{-1}	M_2 Nm	S	i	R_{n2} N	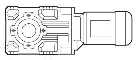		IEC	
1.1	913	1.6	778.2	20000			**A504_778.2 P63 BN63B6**	297
1.2	818	3.4	697.3	30000			**A604_697.3 P63 BN63B6**	305
1.4	740	2.0	631.2	20000			**A504_631.2 P63 BN63B6**	297
1.6	621	2.4	529.5	20000			**A504_529.5 P63 BN63B6**	297
1.7	588	2.5	778.2	20000			**A504_778.2 P63 BN63A4**	297
1.9	535	2.8	707.9	20000			**A504_707.9 P63 BN63A4**	297
2.1	477	3.1	631.2	20000			**A504_631.2 P63 BN63A4**	297
2.4	434	3.5	574.2	20000			**A504_574.2 P63 BN63A4**	297
3.4	310	1.2	400.8	9600	**A303_400.8 S05 M05A4**	284	**A303_400.8 P63 BN63A4**	285
3.4	304	1.5	393.2	12000	**A353_393.2 S05 M05A4**	288	**A353_393.2 P63 BN63A4**	289
3.6	291	2.9	376.8	15000	**A413_376.8 S05 M05A4**	292	**A413_376.8 P63 BN63A4**	293
3.8	275	1.3	356.3	9600	**A303_356.3 S05 M05A4**	284	**A303_356.3 P63 BN63A4**	285
4.0	262	2.0	339.3	12000	**A353_339.3 S05 M05A4**	288	**A353_339.3 P63 BN63A4**	289
4.1	255	1.0	329.4	6200	**A203_329.4 S05 M05A4**	280	**A203_329.4 P63 BN63A4**	281
4.2	251	3.4	324.2	15000	**A413_324.2 S05 M05A4**	292	**A413_324.2 P63 BN63A4**	293
4.3	243	1.6	314.5	9600	**A303_314.5 S05 M05A4**	284	**A303_314.5 P63 BN63A4**	285
4.4	236	2.5	305.4	12000	**A353_305.4 S05 M05A4**	288	**A353_305.4 P63 BN63A4**	289
4.6	226	1.1	292.8	6200	**A203_292.8 S05 M05A4**	280	**A203_292.8 P63 BN63A4**	281
5.0	210	1.8	271.5	9600	**A303_271.5 S05 M05A4**	284	**A303_271.5 P63 BN63A4**	285
5.0	209	2.9	270.7	12000	**A353_270.7 S05 M05A4**	288	**A353_270.7 P63 BN63A4**	289
5.2	201	1.2	260.5	6200	**A203_260.5 S05 M05A4**	280	**A203_260.5 P63 BN63A4**	281
5.4	192	3.1	248.1	12000	**A353_248.1 S05 M05A4**	288	**A353_248.1 P63 BN63A4**	289
5.5	189	2.0	244.3	9600	**A303_244.3 S05 M05A4**	284	**A303_244.3 P63 BN63A4**	285
6.0	172	3.5	223.2	12000	**A353_223.2 S05 M05A4**	288	**A353_223.2 P63 BN63A4**	289
6.1	171	1.5	221.3	6200	**A203_221.3 S05 M05A4**	280	**A203_221.3 P63 BN63A4**	281
6.2	167	2.2	216.6	9600	**A303_216.6 S05 M05A4**	284	**A303_216.6 P63 BN63A4**	285
6.8	154	1.6	199.2	6200	**A203_199.2 S05 M05A4**	280	**A203_199.2 P63 BN63A4**	281
6.8	153	2.3	198.5	9600	**A303_198.5 S05 M05A4**	284	**A303_198.5 P63 BN63A4**	285
7.6	138	2.5	178.5	9600	**A303_178.5 S05 M05A4**	284	**A303_178.5 P63 BN63A4**	285
7.6	138	1.8	178.3	6200	**A203_178.3 S05 M05A4**	280	**A203_178.3 P63 BN63A4**	281
8.3	126	1.9	163.4	6200	**A203_163.4 S05 M05A4**	280	**A203_163.4 P63 BN63A4**	281
8.4	125	2.7	161.4	9600	**A303_161.4 S05 M05A4**	284	**A303_161.4 P63 BN63A4**	285
9.0	116	2.8	150.7	9600	**A303_150.7 S05 M05A4**	284	**A303_150.7 P63 BN63A4**	285
9.2	113	2.0	146.1	6200	**A203_146.1 S05 M05A4**	280	**A203_146.1 P63 BN63A4**	281
9.8	106	3.0	137.4	9600	**A303_137.4 S05 M05A4**	284	**A303_137.4 P63 BN63A4**	285
10.5	100	2.2	129.1	6200	**A203_129.1 S05 M05A4**	280	**A203_129.1 P63 BN63A4**	281
11.2	93	2.3	120.5	6200	**A203_120.5 S05 M05A4**	280	**A203_120.5 P63 BN63A4**	281
11.2	93	3.2	120.5	9600	**A303_120.5 S05 M05A4**	284	**A303_120.5 P63 BN63A4**	285
12.4	84	2.4	109.2	6200	**A203_109.2 S05 M05A4**	280	**A203_109.2 P63 BN63A4**	281
14.6	74	2.7	92.3	6200	**A202_92.3 S05 M05A4**	280	**A202_92.3 P63 BN63A4**	281
14.7	73	1.4	91.6	4420	**A052_91.6 S05 M05A4**	273	**A052_91.6 P63 BN63A4**	273
14.7	73	1.8	91.6	5500	**A102_91.6 S05 M05A4**	276	**A102_91.6 P63 BN63A4**	277
16.9	64	3.3	79.9	6200	**A202_79.9 S05 M05A4**	280	**A202_79.9 P63 BN63A4**	281
17.7	61	1.6	76.4	4230	**A052_76.4 S05 M05A4**	273	**A052_76.4 P63 BN63A4**	273
17.7	61	2.5	76.4	5500	**A102_76.4 S05 M05A4**	276	**A102_76.4 P63 BN63A4**	277
20.5	53	1.9	65.9	4070	**A052_65.9 S05 M05A4**	273	**A052_65.9 P63 BN63A4**	273
20.5	53	2.8	65.9	5500	**A102_65.9 S05 M05A4**	276	**A102_65.9 P63 BN63A4**	277
23.0	47	2.1	58.6	3950	**A052_58.6 S05 M05A4**	273	**A052_58.6 P63 BN63A4**	273
23.0	47	3.2	58.6	5500	**A102_58.6 S05 M05A4**	276	**A102_58.6 P63 BN63A4**	277
26.3	41	2.4	51.3	3810	**A052_51.3 S05 M05A4**	273	**A052_51.3 P63 BN63A4**	273
29.7	36	2.8	45.4	3680	**A052_45.4 S05 M05A4**	273	**A052_45.4 P63 BN63A4**	273

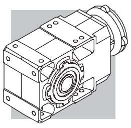

0.12 kW

n2 min-1	M2 Nm	S	i	Rn2 N	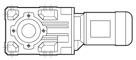		IEC	
33	33	3.1	40.9	3570	**A052_40.9 S05 M05A4**	273	**A052_40.9 P63 BN63A4**	273
38	28	3.6	35.1	3420	**A052_35.1 S05 M05A4**	273	**A052_35.1 P63 BN63A4**	273
42	26	3.9	32.2	3340	**A052_32.2 S05 M05A4**	273	**A052_32.2 P63 BN63A4**	273
47	23	4.4	28.6	3220	**A052_28.6 S05 M05A4**	273	**A052_28.6 P63 BN63A4**	273
53	20	4.9	25.5	3110	**A052_25.5 S05 M05A4**	273	**A052_25.5 P63 BN63A4**	273
57	19	5.3	23.8	3050	**A052_23.8 S05 M05A4**	273	**A052_23.8 P63 BN63A4**	273
62	17.3	5.8	13.9	2960	**A052_13.9 S05 M05B6**	273	**A052_13.9 P63 BN63B6**	273
63	17.1	5.9	21.4	2950	**A052_21.4 S05 M05A4**	273	**A052_21.4 P63 BN63A4**	273
73	14.8	6.7	18.6	2830	**A052_18.6 S05 M05A4**	273	**A052_18.6 P63 BN63A4**	273
82	13.1	7.6	16.4	2730	**A052_16.4 S05 M05A4**	273	**A052_16.4 P63 BN63A4**	273
90	11.9	8.4	9.6	2640	**A052_9.6 S05 M05B6**	273	**A052_9.6 P63 BN63B6**	273
97	11.1	9.0	13.9	2590	**A052_13.9 S05 M05A4**	273	**A052_13.9 P63 BN63A4**	273
110	9.8	10.2	12.3	2500	**A052_12.3 S05 M05A4**	273	**A052_12.3 P63 BN63A4**	273
121	8.9	11.2	7.2	2420	**A052_7.2 S05 M05B6**	273	**A052_7.2 P63 BN63B6**	273
128	8.4	11.9	10.6	2380	**A052_10.6 S05 M05A4**	273	**A052_10.6 P63 BN63A4**	273
140	7.7	13.0	9.6	2310	**A052_9.6 S05 M05A4**	273	**A052_9.6 P63 BN63A4**	273
159	6.8	14.7	8.5	2220	**A052_8.5 S05 M05A4**	273	**A052_8.5 P63 BN63A4**	273
187	5.8	17.4	7.2	2110	**A052_7.2 S05 M05A4**	273	**A052_7.2 P63 BN63A4**	273
213	5.1	19.8	6.3	2020	**A052_6.3 S05 M05A4**	273	**A052_6.3 P63 BN63A4**	273
247	4.4	21.8	5.5	1930	**A052_5.5 S05 M05A4**	273	**A052_5.5 P63 BN63A4**	273

0.18 kW

n2 min-1	M2 Nm	S	i	Rn2 N	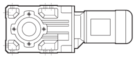		IEC	
0.52	2917	1.7	1715	50000	**A704_1715 S1 M1SC6**	308	**A704_1715 P71 BN71A6**	309
0.58	2649	3.0	1558	65000	**A804_1558 S1 M1SC6**	311	**A804_1558 P71 BN71A6**	312
0.67	2279	3.5	1340	65000	**A804_1340 S1 M1SC6**	311	**A804_1340 P71 BN71A6**	312
0.77	1989	2.5	1715	50000			**A704_1715 P63 BN63B4**	309
0.83	1836	2.7	1583	50000			**A704_1583 P63 BN63B4**	309
0.98	1561	3.2	1346	50000			**A704_1346 P63 BN63B4**	309
1.1	1441	3.5	1242	50000			**A704_1242 P63 BN63B4**	309
1.3	1186	2.4	697.3	30000	**A604_697.3 S1 M1SC6**	304	**A604_697.3 P71 BN71A6**	305
1.5	996	2.8	585.8	30000	**A604_585.8 S1 M1SC6**	304	**A604_585.8 P71 BN71A6**	305
1.7	902	1.7	778.2	20000			**A504_778.2 P63 BN63B4**	297
1.7	876	3.2	755.4	30000			**A604_755.4 P63 BN63B4**	305
1.9	821	1.8	707.9	20000			**A504_707.9 P63 BN63B4**	297
1.9	809	3.5	697.3	30000			**A604_697.3 P63 BN63B4**	305
2.1	732	2.0	631.2	20000			**A504_631.2 P63 BN63B4**	297
2.3	666	2.3	574.2	20000			**A504_574.2 P63 BN63B4**	297
2.5	614	2.4	529.5	20000			**A504_529.5 P63 BN63B4**	297
2.7	559	2.7	481.6	20000			**A504_481.6 P63 BN63B4**	297
3.0	518	2.9	446.8	20000			**A504_446.8 P63 BN63B4**	297
3.2	471	3.2	406.4	20000			**A504_406.4 P63 BN63B4**	297
3.4	466	1.0	393.2	12000	**A353_393.2 S05 M05B4**	288	**A353_393.2 P63 BN63B4**	289
3.5	447	1.9	376.8	15000	**A413_376.8 S05 M05B4**	292	**A413_376.8 P63 BN63B4**	293
3.6	424	3.5	365.6	20000			**A504_365.6 P63 BN63B4**	297
3.7	422	0.9	356.3	9600	**A303_356.3 S05 M05B4**	284	**A303_356.3 P63 BN63B4**	285
3.9	402	1.3	339.3	12000	**A353_339.3 S05 M05B4**	288	**A353_339.3 P63 BN63B4**	289

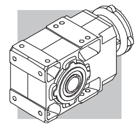

0.18 kW

n2 min-1	M2 Nm	S	i	Rn2 N			IEC	
4.1	384	2.2	324.2	15000	**A413_324.2 S05 M05B4**	292	**A413_324.2 P63 BN63B4**	293
4.2	373	1.0	314.5	9600	**A303_314.5 S05 M05B4**	284	**A303_314.5 P63 BN63B4**	285
4.3	362	1.7	305.4	12000	**A353_305.4 S05 M05B4**	288	**A353_305.4 P63 BN63B4**	289
4.5	346	2.5	291.7	15000	**A413_291.7 S05 M05B4**	292	**A413_291.7 P63 BN63B4**	293
4.9	322	1.2	271.5	9600	**A303_271.5 S05 M05B4**	284	**A303_271.5 P63 BN63B4**	285
4.9	321	1.9	270.7	12000	**A353_270.7 S05 M05B4**	288	**A353_270.7 P63 BN63B4**	289
5.0	311	2.7	262.5	15000	**A413_262.5 S05 M05B4**	292	**A413_262.5 P63 BN63B4**	293
5.3	294	2.0	248.1	12000	**A353_248.1 S05 M05B4**	288	**A353_248.1 P63 BN63B4**	289
5.4	290	1.3	244.3	9600	**A303_244.3 S05 M05B4**	284	**A303_244.3 P63 BN63B4**	285
5.5	285	3.0	240.6	15000	**A413_240.6 S05 M05B4**	292	**A413_240.6 P63 BN63B4**	293
5.9	265	2.3	223.2	12000	**A353_223.2 S05 M05B4**	288	**A353_223.2 P63 BN63B4**	289
6.0	262	1.0	221.3	6200	**A203_221.3 S05 M05B4**	280	**A203_221.3 P63 BN63B4**	281
6.1	258	3.3	217.4	15000	**A413_217.4 S05 M05B4**	292	**A413_217.4 P63 BN63B4**	293
6.1	257	1.4	216.6	9600	**A303_216.6 S05 M05B4**	284	**A303_216.6 P63 BN63B4**	285
6.5	239	2.5	201.8	12000	**A353_201.8 S05 M05B4**	288	**A353_201.8 P63 BN63B4**	289
6.6	236	1.1	199.2	6200	**A203_199.2 S05 M05B4**	280	**A203_199.2 P63 BN63B4**	281
6.6	235	1.5	198.5	9600	**A303_198.5 S05 M05B4**	284	**A303_198.5 P63 BN63B4**	285
7.0	223	2.7	188.3	12000	**A353_188.3 S05 M05B4**	288	**A353_188.3 P63 BN63B4**	289
7.4	212	1.6	178.5	9600	**A303_178.5 S05 M05B4**	284	**A303_178.5 P63 BN63B4**	285
7.4	211	1.2	178.3	6200	**A203_178.3 S05 M05B4**	280	**A203_178.3 P63 BN63B4**	281
7.7	204	2.9	171.8	12000	**A353_171.8 S05 M05B4**	288	**A353_171.8 P63 BN63B4**	289
8.1	194	1.2	163.4	6200	**A203_163.4 S05 M05B4**	280	**A203_163.4 P63 BN63B4**	281
8.2	191	1.8	161.4	9600	**A303_161.4 S05 M05B4**	284	**A303_161.4 P63 BN63B4**	285
8.8	179	1.8	150.7	9600	**A303_150.7 S05 M05B4**	284	**A303_150.7 P63 BN63B4**	285
8.8	179	3.4	150.6	12000	**A353_150.6 S05 M05B4**	288	**A353_150.6 P63 BN63B4**	289
9.0	173	1.3	146.1	6200	**A203_146.1 S05 M05B4**	280	**A203_146.1 P63 BN63B4**	281
9.6	163	1.9	137.4	9600	**A303_137.4 S05 M05B4**	284	**A303_137.4 P63 BN63B4**	285
10.2	153	1.4	129.1	6200	**A203_129.1 S05 M05B4**	280	**A203_129.1 P63 BN63B4**	281
11.0	143	1.5	120.5	6200	**A203_120.5 S05 M05B4**	280	**A203_120.5 P63 BN63B4**	281
11.0	143	2.1	120.5	9600	**A303_120.5 S05 M05B4**	284	**A303_120.5 P63 BN63B4**	285
12.1	129	1.6	109.2	6200	**A203_109.2 S05 M05B4**	280	**A203_109.2 P63 BN63B4**	281
12.1	129	2.3	109.1	9600	**A303_109.1 S05 M05B4**	284	**A303_109.1 P63 BN63B4**	285
13.5	119	2.5	97.5	9600			**A302_97.5 P63 BN63B4**	285
14.3	113	1.8	92.3	6200	**A202_92.3 S05 M05B4**	280	**A202_92.3 P63 BN63B4**	281
14.4	112	0.9	91.6	4120	**A052_91.6 S05 M05B4**	273	**A052_91.6 P63 BN63B4**	273
14.4	112	1.2	91.6	5500	**A102_91.6 S05 M05B4**	276	**A102_91.6 P63 BN63B4**	277
15.2	106	3.0	86.7	9600			**A302_86.7 P63 BN63B4**	285
16.5	98	2.1	79.9	6200	**A202_79.9 S05 M05B4**	280	**A202_79.9 P63 BN63B4**	281
17.3	94	1.1	76.4	3980	**A052_76.4 S05 M05B4**	273	**A052_76.4 P63 BN63B4**	273
17.3	94	1.6	76.4	5500	**A102_76.4 S05 M05B4**	276	**A102_76.4 P63 BN63B4**	277
18.6	87	2.4	71.0	6200	**A202_71.0 S05 M05B4**	280	**A202_71.0 P63 BN63B4**	281
20.0	81	1.2	65.9	3860	**A052_65.9 S05 M05B4**	273	**A052_65.9 P63 BN63B4**	273
20.0	81	1.9	65.9	5500	**A102_65.9 S05 M05B4**	276	**A102_65.9 P63 BN63B4**	277
20.9	77	3.2	63.1	6200	**A202_63.1 S05 M05B4**	280	**A202_63.1 P63 BN63B4**	281
22.5	72	1.4	58.6	3760	**A052_58.6 S05 M05B4**	273	**A052_58.6 P63 BN63B4**	273
22.5	72	2.1	58.6	5500	**A102_58.6 S05 M05B4**	276	**A102_58.6 P63 BN63B4**	277
25.8	63	1.6	51.3	3640	**A052_51.3 S05 M05B4**	273	**A052_51.3 P63 BN63B4**	273
25.8	63	2.4	51.3	5500	**A102_51.3 S05 M05B4**	276	**A102_51.3 P63 BN63B4**	277
29.1	56	1.8	45.4	3540	**A052_45.4 S05 M05B4**	273	**A052_45.4 P63 BN63B4**	273
29.1	56	2.7	45.4	5500	**A102_45.4 S05 M05B4**	276	**A102_45.4 P63 BN63B4**	277
32	50	2.0	40.9	3440	**A052_40.9 S05 M05B4**	273	**A052_40.9 P63 BN63B4**	273

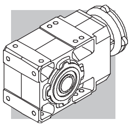

0.18 kW

n_2 min^{-1}	M_2 Nm	S	i	R_{n2} N			IEC	
32	50	3.0	40.9	5500	**A102_40.9 S05 M05B4**	276	**A102_40.9 P63 BN63B4**	277
38	43	2.3	35.1	3310	**A052_35.1 S05 M05B4**	273	**A052_35.1 P63 BN63B4**	273
38	43	3.5	35.1	5380	**A102_35.1 S05 M05B4**	276	**A102_35.1 P63 BN63B4**	277
41	39	2.5	32.2	3240	**A052_32.2 S05 M05B4**	273	**A052_32.2 P63 BN63B4**	273
46	35	2.9	28.6	3130	**A052_28.6 S05 M05B4**	273	**A052_28.6 P63 BN63B4**	273
52	31	3.2	25.5	3040	**A052_25.5 S05 M05B4**	273	**A052_25.5 P63 BN63B4**	273
56	29	3.4	23.8	2980	**A052_23.8 S05 M05B4**	273	**A052_23.8 P63 BN63B4**	273
62	26	3.8	21.4	2890	**A052_21.4 S05 M05B4**	273	**A052_21.4 P63 BN63B4**	273
71	23	4.4	18.6	2780	**A052_18.6 S05 M05B4**	273	**A052_18.6 P63 BN63B4**	273
80	20	5.0	16.4	2680	**A052_16.4 S05 M05B4**	273	**A052_16.4 P63 BN63B4**	273
95	17.1	5.9	13.9	2550	**A052_13.9 S05 M05B4**	273	**A052_13.9 P63 BN63B4**	273
107	15.1	6.6	12.3	2460	**A052_12.3 S05 M05B4**	273	**A052_12.3 P63 BN63B4**	273
125	12.9	7.7	10.6	2350	**A052_10.6 S05 M05B4**	273	**A052_10.6 P63 BN63B4**	273
137	11.8	8.5	9.6	2280	**A052_9.6 S05 M05B4**	273	**A052_9.6 P63 BN63B4**	273
142	11.4	8.8	6.3	2300	**A052_6.3 S1 M1SC6**	273	**A052_6.3 P71 BN71A6**	273
155	10.4	9.6	8.5	2200	**A052_8.5 S05 M05B4**	273	**A052_8.5 P63 BN63B4**	273
183	8.8	11.3	7.2	2090	**A052_7.2 S05 M05B4**	273	**A052_7.2 P63 BN63B4**	273
208	7.8	12.9	6.3	2010	**A052_6.3 S05 M05B4**	273	**A052_6.3 P63 BN63B4**	273
242	6.7	14.2	5.5	1920	**A052_5.5 S05 M05B4**	273	**A052_5.5 P63 BN63B4**	273
284	5.7	16.7	9.6	1830	**A052_9.6 S05 M05A2**	273	**A052_9.6 P63 BN63A2**	273
321	5.0	17.8	8.5	1770	**A052_8.5 S05 M05A2**	273	**A052_8.5 P63 BN63A2**	273
379	4.3	19.9	7.2	1670	**A052_7.2 S05 M05A2**	273	**A052_7.2 P63 BN63A2**	273
431	3.8	21.3	6.3	1610	**A052_6.3 S05 M05A2**	273	**A052_6.3 P63 BN63A2**	273
499	3.2	23.2	5.5	1530	**A052_5.5 S05 M05A2**	273	**A052_5.5 P63 BN63A2**	273

0.25 kW

n_2 min^{-1}	M_2 Nm	S	i	R_{n2} N			IEC	
0.52	4051	1.2	1715	50000	**A704_1715 S1 M1SD6**	308	**A704_1715 P71 BN71B6**	309
0.58	3680	2.2	1558	65000	**A804_1558 S1 M1SD6**	311	**A804_1558 P71 BN71B6**	312
0.67	3165	2.5	1340	65000	**A804_1340 S1 M1SD6**	311	**A804_1340 P71 BN71B6**	312
0.80	2642	1.9	1715	50000			**A704_1715 P71 BN71A4**	309
0.87	2439	2.1	1583	50000			**A704_1583 P71 BN71A4**	309
0.89	2400	3.3	1558	65000			**A804_1558 P71 BN71A4**	312
1.0	2073	2.4	1346	50000			**A704_1346 P71 BN71A4**	309
1.1	1914	2.6	1242	50000			**A704_1242 P71 BN71A4**	309
1.2	1789	2.8	1161	50000			**A704_1161 P71 BN71A4**	309
1.3	1652	3.0	1072	50000			**A704_1072 P71 BN71A4**	309
1.5	1427	3.5	926.5	50000			**A704_926.5 P71 BN71A4**	309
1.8	1199	1.3	778.2	20000			**A504_778.2 P71 BN71A4**	297
1.8	1164	2.4	755.4	30000			**A604_755.4 P71 BN71A4**	305
1.9	1091	1.4	707.9	20000			**A504_707.9 P71 BN71A4**	297
2.0	1074	2.6	697.3	30000			**A604_697.3 P71 BN71A4**	305
2.2	978	2.9	634.6	30000			**A604_634.6 P71 BN71A4**	305
2.2	972	1.5	631.2	20000			**A504_631.2 P71 BN71A4**	297
2.4	902	3.1	585.8	30000			**A604_585.8 P71 BN71A4**	305
2.4	885	1.7	574.2	20000			**A504_574.2 P71 BN71A4**	297
2.5	835	3.4	542.0	30000			**A604_542.0 P71 BN71A4**	305

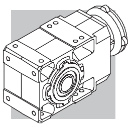

0.25 kW

n2 min-1	M2 Nm	S	i	Rn2 N	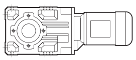		IEC	
2.6	816	1.8	529.5	20000			**A504_529.5 P71 BN71A4**	297
2.9	742	2.0	481.6	20000			**A504_481.6 P71 BN71A4**	297
3.1	688	2.2	446.8	20000			**A504_446.8 P71 BN71A4**	297
3.4	626	2.4	406.4	20000			**A504_406.4 P71 BN71A4**	297
3.6	611	1.4	376.8	15000	**A413_376.8 S05 M05C4**	292	**A413_376.8 P71 BN71A4**	293
3.8	563	2.7	365.6	20000			**A504_365.6 P71 BN71A4**	297
3.9	550	0.9	339.3	12000	**A353_339.3 S05 M05C4**	288	**A353_339.3 P71 BN71A4**	289
4.1	526	1.6	324.2	15000	**A413_324.2 S05 M05C4**	292	**A413_324.2 P71 BN71A4**	293
4.1	512	2.9	332.6	20000			**A504_332.6 P71 BN71A4**	297
4.4	495	1.2	305.4	12000	**A353_305.4 S05 M05C4**	288	**A353_305.4 P71 BN71A4**	289
4.7	460	1.8	291.7	15000	**A413_291.7 S05 M05C4**	292	**A413_291.7 P71 BN71A4**	293
4.8	442	3.4	286.8	20000			**A504_286.8 P71 BN71A4**	297
4.9	440	0.9	271.5	9600	**A303_271.5 S05 M05C4**	284	**A303_271.5 P71 BN71A4**	285
5.0	439	1.4	270.7	12000	**A353_270.7 S05 M05C4**	288	**A353_270.7 P71 BN71A4**	289
5.1	426	2.0	262.5	15000	**A413_262.5 S05 M05C4**	292	**A413_262.5 P71 BN71A4**	293
5.4	403	1.5	248.1	12000	**A353_248.1 S05 M05C4**	288	**A353_248.1 P71 BN71A4**	289
5.6	385	1.0	244.3	9600	**A303_244.3 S05 M05C4**	284	**A303_244.3 P71 BN71A4**	285
5.7	379	2.2	240.6	15000	**A413_240.6 S05 M05C4**	292	**A413_240.6 P71 BN71A4**	293
6.0	362	1.7	223.2	12000	**A353_223.2 S05 M05C4**	288	**A353_223.2 P71 BN71A4**	289
6.2	353	2.4	217.4	15000	**A413_217.4 S05 M05C4**	292	**A413_217.4 P71 BN71A4**	293
6.2	351	1.0	216.6	9600	**A303_216.6 S05 M05C4**	284	**A303_216.6 P71 BN71A4**	285
6.6	327	1.8	201.8	12000	**A353_201.8 S05 M05C4**	288	**A353_201.8 P71 BN71A4**	289
7.0	313	1.1	198.5	9600	**A303_198.5 S05 M05C4**	284	**A303_198.5 P71 BN71A4**	285
7.0	311	2.7	197.5	15000	**A413_197.5 S05 M05C4**	292	**A413_197.5 P71 BN71A4**	293
7.1	306	2.0	188.3	12000	**A353_188.3 S05 M05C4**	288	**A353_188.3 P71 BN71A4**	289
7.3	299	2.8	184.4	15000	**A413_184.4 S05 M05C4**	292	**A413_184.4 P71 BN71A4**	293
7.5	290	1.2	178.5	9600	**A303_178.5 S05 M05C4**	284	**A303_178.5 P71 BN71A4**	285
7.8	279	2.2	171.8	12000	**A353_171.8 S05 M05C4**	288	**A353_171.8 P71 BN71A4**	289
8.4	257	0.9	163.4	6200	**A203_163.4 S05 M05C4**	280	**A203_163.4 P71 BN71A4**	281
8.5	254	1.3	161.4	9600	**A303_161.4 S05 M05C4**	284	**A303_161.4 P71 BN71A4**	285
8.9	244	1.4	150.7	9600	**A303_150.7 S05 M05C4**	284	**A303_150.7 P71 BN71A4**	285
8.9	244	2.5	150.6	12000	**A353_150.6 S05 M05C4**	288	**A353_150.6 P71 BN71A4**	289
9.2	237	1.0	146.1	6200	**A203_146.1 S05 M05C4**	280	**A203_146.1 P71 BN71A4**	281
9.8	221	2.6	136.3	12000	**A353_136.3 S05 M05C4**	288	**A353_136.3 P71 BN71A4**	289
10.0	216	1.5	137.4	9600	**A303_137.4 S05 M05C4**	284	**A303_137.4 P71 BN71A4**	285
10.7	203	1.1	129.1	6200	**A203_129.1 S05 M05C4**	280	**A203_129.1 P71 BN71A4**	281
11.1	196	1.1	120.5	6200	**A203_120.5 S05 M05C4**	280	**A203_120.5 P71 BN71A4**	281
11.1	195	1.5	120.5	9600	**A303_120.5 S05 M05C4**	284	**A303_120.5 P71 BN71A4**	285
11.5	190	3.0	116.9	12000	**A353_116.9 S05 M05C4**	288	**A353_116.9 P71 BN71A4**	289
12.6	172	1.2	109.2	6200	**A203_109.2 S05 M05C4**	280	**A203_109.2 P71 BN71A4**	281
12.7	172	1.7	109.1	9600	**A303_109.1 S05 M05C4**	284	**A303_109.1 P71 BN71A4**	285
12.7	171	3.1	105.5	12000	**A353_105.5 S05 M05C4**	288	**A353_105.5 P71 BN71A4**	289
14.2	159	1.9	97.5	9600			**A302_97.5 P71 BN71A4**	285
14.4	156	3.5	95.6	12000			**A352_95.6 P71 BN71A4**	289
14.5	155	1.3	92.3	6200	**A202_92.3 S05 M05C4**	280	**A202_92.3 P71 BN71A4**	281
15.9	141	2.3	86.7	9600			**A302_86.7 P71 BN71A4**	285
16.8	134	1.6	79.9	6200	**A202_79.9 S05 M05C4**	280	**A202_79.9 P71 BN71A4**	281
17.5	128	1.2	76.4	5500	**A102_76.4 S05 M05C4**	276	**A102_76.4 P71 BN71A4**	277
18.0	125	2.8	76.5	9600			**A302_76.5 P71 BN71A4**	285
19.4	116	1.8	71.0	6200	**A202_71.0 S05 M05C4**	280	**A202_71.0 P71 BN71A4**	281
20.3	110	0.9	65.9	3610	**A052_65.9 S05 M05C4**	273	**A052_65.9 P71 BN71A4**	273

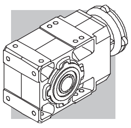

0.25 kW

n2 min-1	M2 Nm	S	i	Rn2 N	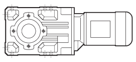			
20.3	110	1.4	65.9	5500	**A102_65.9 S05 M05C4**	276	**A102_65.9 P71 BN71A4**	277
21.2	106	2.3	63.1	6200	**A202_63.1 S05 M05C4**	280	**A202_63.1 P71 BN71A4**	281
22.9	98	1.0	58.6	3540	**A052_58.6 S05 M05C4**	273	**A052_58.6 P71 BN71A4**	273
23.5	95	1.6	58.6	5500	**A102_58.6 S05 M05C4**	276	**A102_58.6 P71 BN71A4**	277
25.0	90	2.8	53.7	6200	**A202_53.7 S05 M05C4**	280	**A202_53.7 P71 BN71A4**	281
26.1	86	1.2	51.3	3450	**A052_51.3 S05 M05C4**	273	**A052_51.3 P71 BN71A4**	273
26.1	86	1.7	51.3	5500	**A102_51.3 S05 M05C4**	276	**A102_51.3 P71 BN71A4**	277
28.6	79	3.2	48.3	6180	**A202_48.3 S05 M05C4**	280	**A202_48.3 P71 BN71A4**	281
29.5	76	1.3	45.4	3370	**A052_45.4 S05 M05C4**	273	**A052_45.4 P71 BN71A4**	273
29.5	76	2.0	45.4	5500	**A102_45.4 S05 M05C4**	276	**A102_45.4 P71 BN71A4**	277
33	68	1.5	40.9	3290	**A052_40.9 S05 M05C4**	273	**A052_40.9 P71 BN71A4**	273
34	66	2.3	40.9	5500	**A102_40.9 S05 M05C4**	276	**A102_40.9 P71 BN71A4**	277
38	59	1.7	35.1	3180	**A052_35.1 S05 M05C4**	273	**A052_35.1 P71 BN71A4**	273
38	59	2.5	35.1	5260	**A102_35.1 S05 M05C4**	276	**A102_35.1 P71 BN71A4**	277
42	54	1.9	32.2	3120	**A052_32.2 S05 M05C4**	273	**A052_32.2 P71 BN71A4**	273
43	52	2.9	32.2	5500	**A102_32.2 S05 M05C4**	276	**A102_32.2 P71 BN71A4**	277
47	48	2.1	28.6	3030	**A052_28.6 S05 M05C4**	273	**A052_28.6 P71 BN71A4**	273
47	48	3.1	28.6	4970	**A102_28.6 S05 M05C4**	276	**A102_28.6 P71 BN71A4**	277
53	43	2.3	25.5	2940	**A052_25.5 S05 M05C4**	273	**A052_25.5 P71 BN71A4**	273
56	40	2.5	23.8	2890	**A052_23.8 S05 M05C4**	273	**A052_23.8 P71 BN71A4**	273
63	36	2.8	21.4	2810	**A052_21.4 S05 M05C4**	273	**A052_21.4 P71 BN71A4**	273
72	31	3.2	18.6	2710	**A052_18.6 S05 M05C4**	273	**A052_18.6 P71 BN71A4**	273
84	27	3.7	16.4	2620	**A052_16.4 S05 M05C4**	273	**A052_16.4 P71 BN71A4**	273
99	23	4.4	13.9	2500	**A052_13.9 S05 M05C4**	273	**A052_13.9 P71 BN71A4**	273
112	20	5.0	12.3	2420	**A052_12.3 S05 M05C4**	273	**A052_12.3 P71 BN71A4**	273
131	17.2	5.8	10.6	2310	**A052_10.6 S05 M05C4**	273	**A052_10.6 P71 BN71A4**	273
144	15.7	6.4	9.6	2260	**A052_9.6 S05 M05C4**	273	**A052_9.6 P71 BN71A4**	273
162	13.9	7.2	8.5	2180	**A052_8.5 S05 M05C4**	273	**A052_8.5 P71 BN71A4**	273
191	11.7	8.5	7.2	2070	**A052_7.2 S05 M05C4**	273	**A052_7.2 P71 BN71A4**	273
218	10.3	9.7	6.3	1990	**A052_6.3 S05 M05C4**	273	**A052_6.3 P71 BN71A4**	273
252	8.9	10.7	5.5	1900	**A052_5.5 S05 M05C4**	273	**A052_5.5 P71 BN71A4**	273
285	7.9	12.1	9.6	1820	**A052_9.6 S05 M05B2**	273	**A052_9.6 P63 BN63B2**	273
322	7.0	12.9	8.5	1750	**A052_8.5 S05 M05B2**	273	**A052_8.5 P63 BN63B2**	273
380	5.9	14.4	7.2	1660	**A052_7.2 S05 M05B2**	273	**A052_7.2 P63 BN63B2**	273
433	5.2	15.4	6.3	1590	**A052_6.3 S05 M05B2**	273	**A052_6.3 P63 BN63B2**	273
501	4.5	16.7	5.5	1520	**A052_5.5 S05 M05B2**	273	**A052_5.5 P63 BN63B2**	273

0.37 kW

n2 min-1	M2 Nm	S	i	Rn2 N	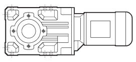			
0.56	5644	2.5	1632	75000	**A904_1632 S1 M1LA6**	314	**A904_1632 P80 BN80A6**	315
0.63	4972	1.6	1438	65000	**A804_1438 S1 M1LA6**	311	**A804_1438 P80 BN80A6**	312
0.74	4226	3.3	1222	75000	**A904_1222 S1 M1LA6**	314	**A904_1222 P80 BN80A6**	315
0.80	3939	1.3	1715	50000	**A704_1715 S1 M1SD4**	308	**A704_1715 P71 BN71B4**	309
0.87	3636	1.4	1583	50000	**A704_1583 S1 M1SD4**	308	**A704_1583 P71 BN71B4**	309
0.88	3577	2.2	1558	65000	**A804_1558 S1 M1SD4**	311	**A804_1558 P71 BN71B4**	312
0.95	3302	2.4	1438	65000	**A804_1438 S1 M1SD4**	311	**A804_1438 P71 BN71B4**	312
1.0	3091	1.6	1346	50000	**A704_1346 S1 M1SD4**	308	**A704_1346 P71 BN71B4**	309

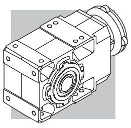

0.37 kW

n_2 min^{-1}	M_2 Nm	S	i	R_{n2} N	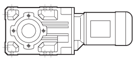			
1.0	3077	2.6	1340	65000	**A804_1340 S1 M1SD4**	311	**A804_1340 P71 BN71B4**	312
1.1	2853	1.8	1242	50000	**A704_1242 S1 M1SD4**	308	**A704_1242 P71 BN71B4**	309
1.1	2841	2.8	1237	65000	**A804_1237 S1 M1SD4**	311	**A804_1237 P71 BN71B4**	312
1.2	2668	1.9	1161	50000	**A704_1161 S1 M1SD4**	308	**A704_1161 P71 BN71B4**	309
1.3	2492	3.2	1085	65000	**A804_1085 S1 M1SD4**	311	**A804_1085 P71 BN71B4**	312
1.3	2462	2.0	1072	50000	**A704_1072 S1 M1SD4**	308	**A704_1072 P71 BN71B4**	309
1.4	2300	3.5	1001	65000	**A804_1001 S1 M1SD4**	311	**A804_1001 P71 BN71B4**	312
1.5	2128	2.3	926.5	50000	**A704_926.5 S1 M1SD4**	308	**A704_926.5 P71 BN71B4**	309
1.6	1964	2.5	855.3	50000	**A704_855.3 S1 M1SD4**	308	**A704_855.3 P71 BN71B4**	309
1.8	1754	2.8	763.9	50000	**A704_763.9 S1 M1SD4**	308	**A704_763.9 P71 BN71B4**	309
1.8	1735	1.6	755.4	30000	**A604_755.4 S1 M1SD4**	304	**A604_755.4 P71 BN71B4**	305
1.9	1626	0.9	707.9	20000	**A504_707.9 S1 M1SD4**	296	**A504_707.9 P71 BN71B4**	297
1.9	1619	3.1	705.1	50000	**A704_705.1 S1 M1SD4**	308	**A704_705.1 P71 BN71B4**	309
2.0	1601	1.7	697.3	30000	**A604_697.3 S1 M1SD4**	304	**A604_697.3 P71 BN71B4**	305
2.1	1481	3.4	644.6	50000	**A704_644.6 S1 M1SD4**	308	**A704_644.6 P71 BN71B4**	309
2.2	1457	1.9	634.6	30000	**A604_634.6 S1 M1SD4**	304	**A604_634.6 P71 BN71B4**	305
2.2	1450	1.0	631.2	20000	**A504_631.2 S1 M1SD4**	296	**A504_631.2 P71 BN71B4**	297
2.3	1345	2.1	585.8	30000	**A604_585.8 S1 M1SD4**	304	**A604_585.8 P71 BN71B4**	305
2.4	1319	1.1	574.2	20000	**A504_574.2 S1 M1SD4**	296	**A504_574.2 P71 BN71B4**	297
2.5	1245	2.2	542.0	30000	**A604_542.0 S1 M1SD4**	304	**A604_542.0 P71 BN71B4**	305
2.6	1216	1.2	529.5	20000	**A504_529.5 S1 M1SD4**	296	**A504_529.5 P71 BN71B4**	297
2.7	1149	2.4	500.3	30000	**A604_500.3 S1 M1SD4**	304	**A604_500.3 P71 BN71B4**	305
2.8	1106	1.4	481.6	20000	**A504_481.6 S1 M1SD4**	296	**A504_481.6 P71 BN71B4**	297
3.1	1026	1.5	446.8	20000	**A504_446.8 S1 M1SD4**	296	**A504_446.8 P71 BN71B4**	297
3.1	1007	2.8	438.4	30000	**A604_438.4 S1 M1SD4**	304	**A604_438.4 P71 BN71B4**	305
3.4	933	1.6	406.4	20000	**A504_406.4 S1 M1SD4**	296	**A504_406.4 P71 BN71B4**	297
3.4	929	3.0	404.7	30000	**A604_404.7 S1 M1SD4**	304	**A604_404.7 P71 BN71B4**	305
3.6	885	1.0	376.8	15000	**A413_376.8 S1 M1SD4**	292	**A413_376.8 P71 BN71B4**	293
3.7	840	1.8	365.6	20000	**A504_365.6 S1 M1SD4**	296	**A504_365.6 P71 BN71B4**	297
3.9	807	3.5	351.2	30000	**A604_351.2 S1 M1SD4**	304	**A604_351.2 P71 BN71B4**	305
4.1	764	2.0	332.6	20000	**A504_332.6 S1 M1SD4**	296	**A504_332.6 P71 BN71B4**	297
4.2	761	1.1	324.2	15000	**A413_324.2 S1 M1SD4**	292	**A413_324.2 P71 BN71B4**	293
4.7	685	1.2	291.7	15000	**A413_291.7 S1 M1SD4**	292	**A413_291.7 P71 BN71B4**	293
4.8	659	2.3	286.8	20000	**A504_286.8 S1 M1SD4**	296	**A504_286.8 P71 BN71B4**	297
5.1	636	0.9	270.7	12000	**A353_270.7 S1 M1SD4**	288	**A353_270.7 P71 BN71B4**	289
5.2	616	1.4	262.5	15000	**A413_262.5 S1 M1SD4**	292	**A413_262.5 P71 BN71B4**	293
5.3	599	2.5	260.9	20000	**A504_260.9 S1 M1SD4**	296	**A504_260.9 P71 BN71B4**	297
5.5	583	1.0	248.1	12000	**A353_248.1 S1 M1SD4**	288	**A353_248.1 P71 BN71B4**	289
5.7	565	1.5	240.6	15000	**A413_240.6 S1 M1SD4**	292	**A413_240.6 P71 BN71B4**	293
5.9	533	2.8	232.0	20000	**A504_232.0 S1 M1SD4**	296	**A504_232.0 P71 BN71B4**	297
6.1	524	1.1	223.2	12000	**A353_223.2 S1 M1SD4**	288	**A353_223.2 P71 BN71B4**	289
6.3	511	1.7	217.4	15000	**A413_217.4 S1 M1SD4**	292	**A413_217.4 P71 BN71B4**	293
6.5	485	3.1	211.0	20000	**A504_211.0 S1 M1SD4**	296	**A504_211.0 P71 BN71B4**	297
6.8	474	1.3	201.8	12000	**A353_201.8 S1 M1SD4**	288	**A353_201.8 P71 BN71B4**	289
6.9	464	1.8	197.5	15000	**A413_197.5 S1 M1SD4**	292	**A413_197.5 P71 BN71B4**	293
7.2	448	3.4	190.6	20000	**A503_190.6 S1 M1SD4**	296	**A503_190.6 P71 BN71B4**	297
7.3	442	1.4	188.3	12000	**A353_188.3 S1 M1SD4**	288	**A353_188.3 P71 BN71B4**	289
7.4	433	2.0	184.4	15000	**A413_184.4 S1 M1SD4**	292	**A413_184.4 P71 BN71B4**	293
8.0	403	1.5	171.8	12000	**A353_171.8 S1 M1SD4**	288	**A353_171.8 P71 BN71B4**	289
9.1	354	0.9	150.7	9600	**A303_150.7 S1 M1SD4**	284	**A303_150.7 P71 BN71B4**	285
9.1	354	1.7	150.6	12000	**A353_150.6 S1 M1SD4**	288	**A353_150.6 P71 BN71B4**	289

0.37 kW

n_2 min-1	M_2 Nm	S	i	R_{n2} N			IEC	
9.3	345	2.5	146.9	15000	**A413_146.9 S1 M1SD4**	292	**A413_146.9 P71 BN71B4**	293
10.0	323	1.0	137.4	9600	**A303_137.4 S1 M1SD4**	284	**A303_137.4 P71 BN71B4**	285
10.0	320	1.8	136.3	12000	**A353_136.3 S1 M1SD4**	288	**A353_136.3 P71 BN71B4**	289
11.4	283	1.1	120.5	9600	**A303_120.5 S1 M1SD4**	284	**A303_120.5 P71 BN71B4**	285
11.7	275	2.0	116.9	12000	**A353_116.9 S1 M1SD4**	288	**A353_116.9 P71 BN71B4**	289
11.8	272	3.1	115.9	15000	**A413_115.9 S1 M1SD4**	292	**A413_115.9 P71 BN71B4**	293
12.6	256	1.2	109.1	9600	**A303_109.1 S1 M1SD4**	284	**A303_109.1 P71 BN71B4**	285
13.0	248	2.1	105.5	12000	**A353_105.5 S1 M1SD4**	288	**A353_105.5 P71 BN71B4**	289
14.1	237	1.3	97.5	9600			**A302_97.5 P71 BN71B4**	285
14.3	232	2.3	95.6	12000	**A352_95.6 S1 M1SD4**	288	**A352_95.6 P71 BN71B4**	289
15.8	210	1.5	86.7	9600			**A302_86.7 P71 BN71B4**	285
16.6	200	3.0	82.5	12000	**A352_82.5 S1 M1SD4**	288	**A352_82.5 P71 BN71B4**	289
17.2	194	1.1	79.9	6200			**A202_79.9 P71 BN71B4**	281
17.9	186	1.9	76.5	9600	**A302_76.5 S1 M1SD4**	284	**A302_76.5 P71 BN71B4**	285
18.4	180	3.3	74.3	12000	**A352_74.3 S1 M1SD4**	288	**A352_74.3 P71 BN71B4**	289
19.3	172	1.2	71.0	6200			**A202_71.0 P71 BN71B4**	281
20.7	160	2.4	66.0	9350	**A302_66.0 S1 M1SD4**	284	**A302_66.0 P71 BN71B4**	285
20.8	160	0.9	65.9	5500			**A102_65.9 P71 BN71B4**	277
21.7	153	1.6	63.1	6200	**A202_63.1 S1 M1SD4**	280	**A202_63.1 P71 BN71B4**	281
23.1	144	2.8	59.4	9080	**A302_59.4 S1 M1SD4**	284	**A302_59.4 P71 BN71B4**	285
23.4	142	1.1	58.6	5500			**A102_58.6 P71 BN71B4**	277
25.5	130	1.9	53.7	6090	**A202_53.7 S1 M1SD4**	280	**A202_53.7 P71 BN71B4**	281
26.0	128	3.2	52.7	8790	**A302_52.7 S1 M1SD4**	284	**A302_52.7 P71 BN71B4**	285
26.7	124	1.2	51.3	5490	**A102_51.3 S1 M1SD4**	276	**A102_51.3 P71 BN71B4**	277
28.4	117	2.1	48.3	5940	**A202_48.3 S1 M1SD4**	280	**A202_48.3 P71 BN71B4**	281
28.4	117	3.5	48.3	8580	**A302_48.3 S1 M1SD4**	284	**A302_48.3 P71 BN71B4**	285
30	110	0.9	45.4	3060	**A052_45.4 S1 M1SD4**	273	**A052_45.4 P71 BN71B4**	273
30	110	1.4	45.4	5350	**A102_45.4 S1 M1SD4**	276	**A102_45.4 P71 BN71B4**	277
32	105	2.4	43.2	5780	**A202_43.2 S1 M1SD4**	280	**A202_43.2 P71 BN71B4**	281
34	99	1.0	40.9	3020	**A052_40.9 S1 M1SD4**	273	**A052_40.9 P71 BN71B4**	273
34	99	1.5	40.9	5500	**A102_40.9 S1 M1SD4**	276	**A102_40.9 P71 BN71B4**	277
35	96	2.6	39.6	5650	**A202_39.6 S1 M1SD4**	280	**A202_39.6 P71 BN71B4**	281
39	86	2.9	35.4	5480	**A202_35.4 S1 M1SD4**	280	**A202_35.4 P71 BN71B4**	281
39	85	1.2	35.1	2950	**A052_35.1 S1 M1SD4**	273	**A052_35.1 P71 BN71B4**	273
39	85	1.8	35.1	5040	**A102_35.1 S1 M1SD4**	276	**A102_35.1 P71 BN71B4**	277
43	78	1.3	32.2	2900	**A052_32.2 S1 M1SD4**	273	**A052_32.2 P71 BN71B4**	273
43	78	1.9	32.2	5500	**A102_32.2 S1 M1SD4**	276	**A102_32.2 P71 BN71B4**	277
44	76	3.3	31.3	5310	**A202_31.3 S1 M1SD4**	280	**A202_31.3 P71 BN71B4**	281
47	71	3.5	29.2	5210	**A202_29.2 S1 M1SD4**	280	**A202_29.2 P71 BN71B4**	281
48	69	1.4	28.6	2840	**A052_28.6 S1 M1SD4**	273	**A052_28.6 P71 BN71B4**	273
48	69	2.2	28.6	4790	**A102_28.6 S1 M1SD4**	276	**A102_28.6 P71 BN71B4**	277
54	62	1.6	25.5	2770	**A052_25.5 S1 M1SD4**	273	**A052_25.5 P71 BN71B4**	273
54	62	2.4	25.5	5500	**A102_25.5 S1 M1SD4**	276	**A102_25.5 P71 BN71B4**	277
58	58	1.7	23.8	2730	**A052_23.8 S1 M1SD4**	273	**A052_23.8 P71 BN71B4**	273
58	58	2.6	23.8	4570	**A102_23.8 S1 M1SD4**	276	**A102_23.8 P71 BN71B4**	277
64	52	1.9	21.4	2670	**A052_21.4 S1 M1SD4**	273	**A052_21.4 P71 BN71B4**	273
64	52	2.9	21.4	5270	**A102_21.4 S1 M1SD4**	276	**A102_21.4 P71 BN71B4**	277
74	45	2.2	18.6	2590	**A052_18.6 S1 M1SD4**	273	**A052_18.6 P71 BN71B4**	273
74	45	3.3	18.6	4270	**A102_18.6 S1 M1SD4**	276	**A102_18.6 P71 BN71B4**	277
83	40	2.5	16.4	2510	**A052_16.4 S1 M1SD4**	273	**A052_16.4 P71 BN71B4**	273
98	34	3.0	13.9	2410	**A052_13.9 S1 M1SD4**	273	**A052_13.9 P71 BN71B4**	273

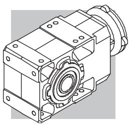

0.37 kW

n_2 min-1	M_2 Nm	S	i	R_{n2} N			IEC	
111	30	3.3	12.3	2350	**A052_12.3 S1 M1SD4**	273	**A052_12.3 P71 BN71B4**	273
130	26	3.9	10.6	2240	**A052_10.6 S1 M1SD4**	273	**A052_10.6 P71 BN71B4**	273
142	23	4.3	9.6	2190	**A052_9.6 S1 M1SD4**	273	**A052_9.6 P71 BN71B4**	273
161	21	4.8	8.5	2120	**A052_8.5 S1 M1SD4**	273	**A052_8.5 P71 BN71B4**	273
190	17.5	5.7	7.2	2030	**A052_7.2 S1 M1SD4**	273	**A052_7.2 P71 BN71B4**	273
216	15.4	6.5	6.3	1950	**A052_6.3 S1 M1SD4**	273	**A052_6.3 P71 BN71B4**	273
228	14.6	6.8	12.3	1920	**A052_12.3 S05 M05C2**	273	**A052_12.3 P71 BN71A2**	273
251	13.3	7.2	5.5	1870	**A052_5.5 S1 M1SD4**	273	**A052_5.5 P71 BN71B4**	273
265	12.5	6.4	10.6	1830	**A052_10.6 S05 M05C2**	273	**A052_10.6 P71 BN71A2**	273
291	11.4	8.3	9.6	1790	**A052_9.6 S05 M05C2**	273	**A052_9.6 P71 BN71A2**	273
331	10.0	9.0	8.5	1720	**A052_8.5 S05 M05C2**	273	**A052_8.5 P71 BN71A2**	273
388	8.6	9.9	7.2	1640	**A052_7.2 S05 M05C2**	273	**A052_7.2 P71 BN71A2**	273
445	7.5	10.7	6.3	1570	**A052_6.3 S05 M05C2**	273	**A052_6.3 P71 BN71A2**	273
512	6.5	11.6	5.5	1500	**A052_5.5 S05 M05C2**	273		

0.55 kW

n_2 min-1	M_2 Nm	S	i	R_{n2} N			IEC	
0.56	8299	1.7	1632	75000	**A904_1632 S2 M2SA6**	314	**A904_1632 P80 BN80B6**	315
0.64	7310	1.1	1438	65000	**A804_1438 S2 M2SA6**	311	**A804_1438 P80 BN80B6**	312
0.75	6213	2.3	1222	75000	**A904_1222 S2 M2SA6**	314	**A904_1222 P80 BN80B6**	315
0.80	5813	0.9	1715	50000	**A704_1715 S1 M1LA4**	308	**A704_1715 P80 BN80A4**	309
0.85	5532	2.5	1632	75000	**A904_1632 S1 M1LA4**	314	**A904_1632 P80 BN80A4**	315
0.87	5365	0.9	1583	50000	**A704_1583 S1 M1LA4**	308	**A704_1583 P80 BN80A4**	309
0.89	5279	1.5	1558	65000	**A804_1558 S1 M1LA4**	311	**A804_1558 P80 BN80A4**	312
0.92	5070	2.8	1507	75000	**A904_1507 S1 M1LA4**	314	**A904_1507 P80 BN80A4**	315
0.96	4873	1.6	1438	65000	**A804_1438 S1 M1LA4**	311	**A804_1438 P80 BN80A4**	312
1.0	4561	1.1	1346	50000	**A704_1346 S1 M1LA4**	308	**A704_1346 P80 BN80A4**	309
1.0	4541	1.8	1340	65000	**A804_1340 S1 M1LA4**	311	**A804_1340 P80 BN80A4**	312
1.0	4455	3.1	1324	75000	**A904_1324 S1 M1LA4**	314	**A904_1324 P80 BN80A4**	315
1.1	4211	1.2	1242	50000	**A704_1242 S1 M1LA4**	308	**A704_1242 P80 BN80A4**	309
1.1	4192	1.9	1237	65000	**A804_1237 S1 M1LA4**	311	**A804_1237 P80 BN80A4**	312
1.1	4112	3.4	1222	75000	**A904_1222 S1 M1LA4**	314	**A904_1222 P80 BN80A4**	315
1.2	3937	1.3	1161	50000	**A704_1161 S1 M1LA4**	308	**A704_1161 P80 BN80A4**	309
1.3	3677	2.2	1085	65000	**A804_1085 S1 M1LA4**	311	**A804_1085 P80 BN80A4**	312
1.3	3634	1.4	1072	50000	**A704_1072 S1 M1LA4**	308	**A704_1072 P80 BN80A4**	309
1.4	3394	2.4	1001	65000	**A804_1001 S1 M1LA4**	311	**A804_1001 P80 BN80A4**	312
1.5	3140	1.6	926.5	50000	**A704_926.5 S1 M1LA4**	308	**A704_926.5 P80 BN80A4**	309
1.5	3046	2.6	898.7	65000	**A804_898.7 S1 M1LA4**	311	**A804_898.7 P80 BN80A4**	312
1.6	2899	1.7	855.3	50000	**A704_855.3 S1 M1LA4**	308	**A704_855.3 P80 BN80A4**	309
1.7	2811	2.8	829.5	65000	**A804_829.5 S1 M1LA4**	311	**A804_829.5 P80 BN80A4**	312
1.8	2589	1.9	763.9	50000	**A704_763.9 S1 M1LA4**	308	**A704_763.9 P80 BN80A4**	309
1.8	2583	3.1	762.1	65000	**A804_762.1 S1 M1LA4**	311	**A804_762.1 P80 BN80A4**	312
1.8	2560	1.1	755.4	30000	**A604_755.4 S1 M1LA4**	304	**A604_755.4 P80 BN80A4**	305
2.0	2390	2.1	705.1	50000	**A704_705.1 S1 M1LA4**	308	**A704_705.1 P80 BN80A4**	309
2.0	2384	3.4	703.5	65000	**A804_703.5 S1 M1LA4**	311	**A804_703.5 P80 BN80A4**	312
2.0	2363	1.2	697.3	30000	**A604_697.3 S1 M1LA4**	304	**A604_697.3 P80 BN80A4**	305
2.1	2185	2.3	644.6	50000	**A704_644.6 S1 M1LA4**	308	**A704_644.6 P80 BN80A4**	309

0.55 kW

n_2 min^{-1}	M_2 Nm	S	i	R_{n2} N	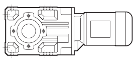			
2.2	2151	1.3	634.6	30000	**A604_634.6 S1 M1LA4**	304	**A604_634.6 P80 BN80A4**	305
2.3	2017	2.5	595.0	50000	**A704_595.0 S1 M1LA4**	308	**A704_595.0 P80 BN80A4**	309
2.4	1985	1.4	585.8	30000	**A604_585.8 S1 M1LA4**	304	**A604_585.8 P80 BN80A4**	305
2.5	1837	1.5	542.0	30000	**A604_542.0 S1 M1LA4**	304	**A604_542.0 P80 BN80A4**	305
2.7	1747	2.9	515.4	50000	**A704_515.4 S1 M1LA4**	308	**A704_515.4 P80 BN80A4**	309
2.8	1696	1.7	500.3	30000	**A604_500.3 S1 M1LA4**	304	**A604_500.3 P80 BN80A4**	305
2.9	1632	0.9	481.6	20000	**A504_481.6 S1 M1LA4**	296	**A504_481.6 P80 BN80A4**	297
2.9	1612	3.1	475.8	50000	**A704_475.8 S1 M1LA4**	308	**A704_475.8 P80 BN80A4**	309
3.1	1514	1.0	446.8	20000	**A504_446.8 S1 M1LA4**	296	**A504_446.8 P80 BN80A4**	297
3.1	1486	1.9	438.4	30000	**A604_438.4 S1 M1LA4**	304	**A604_438.4 P80 BN80A4**	305
3.4	1378	1.1	406.4	20000	**A504_406.4 S1 M1LA4**	296	**A504_406.4 P80 BN80A4**	297
3.4	1372	2.0	404.7	30000	**A604_404.7 S1 M1LA4**	304	**A604_404.7 P80 BN80A4**	305
3.8	1239	1.2	365.6	20000	**A504_365.6 S1 M1LA4**	296	**A504_365.6 P80 BN80A4**	297
3.9	1190	2.4	351.2	30000	**A604_351.2 S1 M1LA4**	304	**A604_351.2 P80 BN80A4**	305
4.1	1127	1.3	332.6	20000	**A504_332.6 S1 M1LA4**	296	**A504_332.6 P80 BN80A4**	297
4.3	1099	2.5	324.2	30000	**A604_324.2 S1 M1LA4**	304	**A604_324.2 P80 BN80A4**	305
4.8	972	1.5	286.8	20000	**A504_286.8 S1 M1LA4**	296	**A504_286.8 P80 BN80A4**	297
4.8	970	2.9	286.3	30000	**A604_286.3 S1 M1LA4**	304	**A604_286.3 P80 BN80A4**	305
5.2	896	3.1	264.3	30000	**A604_264.3 S1 M1LA4**	304	**A604_264.3 P80 BN80A4**	305
5.3	910	0.9	262.5	15000	**A413_262.5 S1 M1LA4**	292	**A413_262.5 P80 BN80A4**	293
5.3	884	1.7	260.9	20000	**A504_260.9 S1 M1LA4**	296	**A504_260.9 P80 BN80A4**	297
5.7	834	1.0	240.6	15000	**A413_240.6 S1 M1LA4**	292	**A413_240.6 P80 BN80A4**	293
5.9	786	1.9	232.0	20000	**A504_232.0 S1 M1LA4**	296	**A504_232.0 P80 BN80A4**	297
6.3	753	1.1	217.4	15000	**A413_217.4 S1 M1LA4**	292	**A413_217.4 P80 BN80A4**	293
6.5	715	2.1	211.0	20000	**A504_211.0 S1 M1LA4**	296	**A504_211.0 P80 BN80A4**	297
7.0	685	1.2	197.5	15000	**A413_197.5 S1 M1LA4**	292	**A413_197.5 P80 BN80A4**	293
7.1	673	3.0	194.2	30000	**A553_194.2 S1 M1LA4**	300	**A553_194.2 P80 BN80A4**	301
7.2	660	2.3	190.6	20000	**A503_190.6 S1 M1LA4**	296	**A503_190.6 P80 BN80A4**	297
7.3	653	0.9	188.3	12000	**A353_188.3 S1 M1LA4**	288	**A353_188.3 P80 BN80A4**	289
7.5	639	1.3	184.4	15000	**A413_184.4 S1 M1LA4**	292	**A413_184.4 P80 BN80A4**	293
7.9	607	3.3	175.0	30000	**A553_175.0 S1 M1LA4**	300	**A553_175.0 P80 BN80A4**	301
8.0	601	2.5	173.4	20000	**A503_173.4 S1 M1LA4**	296	**A503_173.4 P80 BN80A4**	297
8.0	595	1.0	171.8	12000	**A353_171.8 S1 M1LA4**	288	**A353_171.8 P80 BN80A4**	289
9.0	532	2.8	154.6	20000	**A503_154.6 S1 M1LA4**	296	**A503_154.6 P80 BN80A4**	297
9.2	522	1.1	150.6	12000	**A353_150.6 S1 M1LA4**	288	**A353_150.6 P80 BN80A4**	289
9.4	509	1.7	146.9	15000	**A413_146.9 S1 M1LA4**	292	**A413_146.9 P80 BN80A4**	293
9.9	484	3.1	140.6	20000	**A503_140.6 S1 M1LA4**	296	**A503_140.6 P80 BN80A4**	297
10.1	472	1.2	136.3	12000	**A353_136.3 S1 M1LA4**	288	**A353_136.3 P80 BN80A4**	289
10.7	446	3.4	129.7	20000	**A503_129.7 S1 M1LA4**	296	**A503_129.7 P80 BN80A4**	297
11.8	405	1.4	116.9	12000	**A353_116.9 S1 M1LA4**	288	**A353_116.9 P80 BN80A4**	289
11.9	402	2.1	115.9	15000	**A413_115.9 S1 M1LA4**	292	**A413_115.9 P80 BN80A4**	293
13.1	366	1.4	105.5	12000	**A353_105.5 S1 M1LA4**	288	**A353_105.5 P80 BN80A4**	289
14.2	349	0.9	97.5	9600			**A302_97.5 P80 BN80A4**	285
14.4	342	1.6	95.6	12000	**A352_95.6 S1 M1LA4**	288	**A352_95.6 P80 BN80A4**	289
14.9	321	2.5	92.8	15000	**A413_92.8 S1 M1LA4**	292	**A413_92.8 P80 BN80A4**	293
15.9	310	1.0	86.7	9420			**A302_86.7 P80 BN80A4**	285
16.7	295	2.0	82.5	12000	**A352_82.5 S1 M1LA4**	288	**A352_82.5 P80 BN80A4**	289
17.4	284	3.0	79.2	15000	**A412_79.2 S1 M1LA4**	292	**A412_79.2 P80 BN80A4**	293
18.0	274	1.3	76.5	9180	**A302_76.5 S1 M1LA4**	284	**A302_76.5 P80 BN80A4**	285
18.6	266	2.3	74.3	12000	**A352_74.3 S1 M1LA4**	288	**A352_74.3 P80 BN80A4**	289
19.4	255	3.3	71.3	15000	**A412_71.3 S1 M1LA4**	292	**A412_71.3 P80 BN80A4**	293

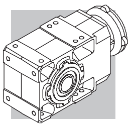

0.55 kW

n_2 min-1	M_2 Nm	S	i	R_{n2} N			IEC	
20.9	236	1.6	66.0	8880	**A302_66.0 S1 M1LA4**	284	**A302_66.0 P80 BN80A4**	285
21.0	236	2.5	65.8	12000	**A352_65.8 S1 M1LA4**	288	**A352_65.8 P80 BN80A4**	289
21.9	226	1.1	63.1	5840	**A202_63.1 S1 M1LA4**	280	**A202_63.1 P80 BN80A4**	281
22.9	216	2.8	60.4	12000	**A352_60.4 S1 M1LA4**	288	**A352_60.4 P80 BN80A4**	289
23.2	213	1.9	59.4	8660	**A302_59.4 S1 M1LA4**	284	**A302_59.4 P80 BN80A4**	285
25.4	194	3.1	54.3	12000	**A352_54.3 S1 M1LA4**	288	**A352_54.3 P80 BN80A4**	289
25.7	192	1.3	53.7	5670	**A202_53.7 S1 M1LA4**	280	**A202_53.7 P80 BN80A4**	281
26.2	189	2.2	52.7	8410	**A302_52.7 S1 M1LA4**	284	**A302_52.7 P80 BN80A4**	285
28.1	176	3.4	49.1	12000	**A352_49.1 S1 M1LA4**	288	**A352_49.1 P80 BN80A4**	289
28.6	173	1.4	48.3	5560	**A202_48.3 S1 M1LA4**	280	**A202_48.3 P80 BN80A4**	281
28.6	173	2.4	48.3	8230	**A302_48.3 S1 M1LA4**	284	**A302_48.3 P80 BN80A4**	285
30	163	0.9	45.4	4910	**A102_45.4 S1 M1LA4**	276	**A102_45.4 P80 BN80A4**	277
32	155	2.6	43.4	8010	**A302_43.4 S1 M1LA4**	284	**A302_43.4 P80 BN80A4**	285
32	155	1.6	43.2	5440	**A202_43.2 S1 M1LA4**	280	**A202_43.2 P80 BN80A4**	281
34	146	1.0	40.9	5500	**A102_40.9 S1 M1LA4**	276	**A102_40.9 P80 BN80A4**	277
35	142	1.8	39.6	5340	**A202_39.6 S1 M1LA4**	280	**A202_39.6 P80 BN80A4**	281
35	141	2.9	39.3	7800	**A302_39.3 S1 M1LA4**	284	**A302_39.3 P80 BN80A4**	285
38	131	3.1	36.6	7660	**A302_36.6 S1 M1LA4**	284	**A302_36.6 P80 BN80A4**	285
39	127	2.0	35.4	5200	**A202_35.4 S1 M1LA4**	280	**A202_35.4 P80 BN80A4**	281
39	126	1.2	35.1	4700	**A102_35.1 S1 M1LA4**	276	**A102_35.1 P80 BN80A4**	277
41	120	3.4	33.4	7480	**A302_33.4 S1 M1LA4**	284	**A302_33.4 P80 BN80A4**	285
43	115	1.3	32.2	5490	**A102_32.2 S1 M1LA4**	276	**A102_32.2 P80 BN80A4**	277
44	112	2.2	31.3	5060	**A202_31.3 S1 M1LA4**	280	**A202_31.3 P80 BN80A4**	281
47	105	2.4	29.2	4970	**A202_29.2 S1 M1LA4**	280	**A202_29.2 P80 BN80A4**	281
48	102	1.0	28.6	2550	**A052_28.6 S1 M1LA4**	273	**A052_28.6 P80 BN80A4**	273
48	102	1.5	28.6	4510	**A102_28.6 S1 M1LA4**	276	**A102_28.6 P80 BN80A4**	277
52	95	2.6	26.5	4850	**A202_26.5 S1 M1LA4**	280	**A202_26.5 P80 BN80A4**	281
54	91	1.1	25.5	2510	**A052_25.5 S1 M1LA4**	273	**A052_25.5 P80 BN80A4**	273
54	91	1.6	25.5	5230	**A102_25.5 S1 M1LA4**	276	**A102_25.5 P80 BN80A4**	277
58	85	1.2	23.8	2490	**A052_23.8 S1 M1LA4**	273	**A052_23.8 P80 BN80A4**	273
58	85	1.8	23.8	4330	**A102_23.8 S1 M1LA4**	276	**A102_23.8 P80 BN80A4**	277
60	83	3.0	23.1	4690	**A202_23.1 S1 M1LA4**	280	**A202_23.1 P80 BN80A4**	281
65	76	1.3	21.4	2450	**A052_21.4 S1 M1LA4**	273	**A052_21.4 P80 BN80A4**	273
65	76	2.0	21.4	5020	**A102_21.4 S1 M1LA4**	276	**A102_21.4 P80 BN80A4**	277
65	76	3.3	21.2	4590	**A202_21.2 S1 M1LA4**	280	**A202_21.2 P80 BN80A4**	281
74	66	1.5	18.6	2400	**A052_18.6 S1 M1LA4**	273	**A052_18.6 P80 BN80A4**	273
74	66	2.3	18.6	4090	**A102_18.6 S1 M1LA4**	276	**A102_18.6 P80 BN80A4**	277
84	59	1.7	16.4	2340	**A052_16.4 S1 M1LA4**	273	**A052_16.4 P80 BN80A4**	273
84	59	2.5	16.4	4710	**A102_16.4 S1 M1LA4**	276	**A102_16.4 P80 BN80A4**	277
99	50	2.0	13.9	2270	**A052_13.9 S1 M1LA4**	273	**A052_13.9 P80 BN80A4**	273
99	50	3.0	13.9	3800	**A102_13.9 S1 M1LA4**	276	**A102_13.9 P80 BN80A4**	277
112	44	2.3	12.3	2220	**A052_12.3 S1 M1LA4**	273	**A052_12.3 P80 BN80A4**	273
112	44	3.2	12.3	3670	**A102_12.3 S1 M1LA4**	276	**A102_12.3 P80 BN80A4**	277
131	38	2.6	10.6	2130	**A052_10.6 S1 M1LA4**	273	**A052_10.6 P80 BN80A4**	273
144	34	2.9	9.6	2100	**A052_9.6 S1 M1LA4**	273	**A052_9.6 P80 BN80A4**	273
162	30	3.3	8.5	2030	**A052_8.5 S1 M1LA4**	273	**A052_8.5 P80 BN80A4**	273
171	29	3.1	16.4	2000	**A052_16.4 S1 M1SD2**	273	**A052_16.4 P71 BN71B2**	273
191	26	3.9	7.2	1950	**A052_7.2 S1 M1LA4**	273	**A052_7.2 P80 BN80A4**	273
218	23	4.4	6.3	1880	**A052_6.3 S1 M1LA4**	273	**A052_6.3 P80 BN80A4**	273
229	22	4.6	12.3	1860	**A052_12.3 S1 M1SD2**	273	**A052_12.3 P71 BN71B2**	273
252	19.6	4.9	5.5	1810	**A052_5.5 S1 M1LA4**	273	**A052_5.5 P80 BN80A4**	273

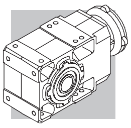

0.55 kW

n2 min-1	M2 Nm	S	i	Rn2 N			IEC	
267	18.5	4.3	10.6	1780	**A052_10.6 S1 M1SD2**	273	**A052_10.6 P71 BN71B2**	273
293	16.8	5.6	9.6	1740	**A052_9.6 S1 M1SD2**	273	**A052_9.6 P71 BN71B2**	273
331	14.9	6.0	8.5	1680	**A052_8.5 S1 M1SD2**	273	**A052_8.5 P71 BN71B2**	273
391	12.6	6.7	7.2	1600	**A052_7.2 S1 M1SD2**	273	**A052_7.2 P71 BN71B2**	273
445	11.1	7.2	6.3	1540	**A052_6.3 S1 M1SD2**	273	**A052_6.3 P71 BN71B2**	273
516	9.6	7.8	5.5	1480	**A052_5.5 S1 M1SD2**	273	**A052_5.5 P71 BN71B2**	273

0.75 kW

n2 min-1	M2 Nm	S	i	Rn2 N			IEC	
0.56	11316	1.2	1632	75000	**A904_1632 S2 M2SB6**	314	**A904_1632 P90 BN90S6**	315
0.61	10446	1.3	1507	75000	**A904_1507 S2 M2SB6**	314	**A904_1507 P90 BN90S6**	315
0.69	9179	1.5	1324	75000	**A904_1324 S2 M2SB6**	314	**A904_1324 P90 BN90S6**	315
0.75	8473	1.7	1222	75000	**A904_1222 S2 M2SB6**	314	**A904_1222 P90 BN90S6**	315
0.86	7436	1.9	1632	75000	**A904_1632 S2 M2SA4**	314	**A904_1632 P80 BN80B4**	315
0.90	7096	1.1	1558	65000	**A804_1558 S2 M2SA4**	311	**A804_1558 P80 BN80B4**	312
0.93	6864	2.0	1507	75000	**A904_1507 S2 M2SA4**	314	**A904_1507 P80 BN80B4**	315
0.97	6550	1.2	1438	65000	**A804_1438 S2 M2SA4**	311	**A804_1438 P80 BN80B4**	312
1.0	6104	1.3	1340	65000	**A804_1340 S2 M2SA4**	311	**A804_1340 P80 BN80B4**	312
1.1	6032	2.3	1324	75000	**A904_1324 S2 M2SA4**	314	**A904_1324 P80 BN80B4**	315
1.1	5660	0.9	1242	50000	**A704_1242 S2 M2SA4**	308	**A704_1242 P80 BN80B4**	309
1.1	5635	1.4	1237	65000	**A804_1237 S2 M2SA4**	311	**A804_1237 P80 BN80B4**	312
1.1	5568	2.5	1222	75000	**A904_1222 S2 M2SA4**	314	**A904_1222 P80 BN80B4**	315
1.2	5291	0.9	1161	50000	**A704_1161 S2 M2SA4**	308	**A704_1161 P80 BN80B4**	309
1.3	5060	2.8	1111	75000	**A904_1111 S2 M2SA4**	314	**A904_1111 P80 BN80B4**	315
1.3	4942	1.6	1085	65000	**A804_1085 S2 M2SA4**	311	**A804_1085 P80 BN80B4**	312
1.3	4884	1.0	1072	50000	**A704_1072 S2 M2SA4**	308	**A704_1072 P80 BN80B4**	309
1.4	4670	3.0	1025	75000	**A904_1025 S2 M2SA4**	314	**A904_1025 P80 BN80B4**	315
1.4	4562	1.8	1001	65000	**A804_1001 S2 M2SA4**	311	**A804_1001 P80 BN80B4**	312
1.5	4270	3.3	937.2	75000	**A904_937.2 S2 M2SA4**	314	**A904_937.2 P80 BN80B4**	315
1.5	4221	1.2	926.5	50000	**A704_926.5 S2 M2SA4**	308	**A704_926.5 P80 BN80B4**	309
1.6	4094	2.0	898.7	65000	**A804_898.7 S2 M2SA4**	311	**A804_898.7 P80 BN80B4**	312
1.6	3896	1.3	855.3	50000	**A704_855.3 S2 M2SA4**	308	**A704_855.3 P80 BN80B4**	309
1.7	3779	2.1	829.5	65000	**A804_829.5 S2 M2SA4**	311	**A804_829.5 P80 BN80B4**	312
1.8	3480	1.4	763.9	50000	**A704_763.9 S2 M2SA4**	308	**A704_763.9 P80 BN80B4**	309
1.8	3472	2.3	762.1	65000	**A804_762.1 S2 M2SA4**	311	**A804_762.1 P80 BN80B4**	312
2.0	3212	1.6	705.1	50000	**A704_705.1 S2 M2SA4**	308	**A704_705.1 P80 BN80B4**	309
2.0	3205	2.5	703.5	65000	**A804_703.5 S2 M2SA4**	311	**A804_703.5 P80 BN80B4**	312
2.0	3177	0.9	697.3	30000	**A604_697.3 S2 M2SA4**	304	**A604_697.3 P80 BN80B4**	305
2.2	2937	1.7	644.6	50000	**A704_644.6 S2 M2SA4**	308	**A704_644.6 P80 BN80B4**	309
2.2	2891	1.0	634.6	30000	**A604_634.6 S2 M2SA4**	304	**A604_634.6 P80 BN80B4**	305
2.3	2766	2.9	607.2	65000	**A804_607.2 S2 M2SA4**	311	**A804_607.2 P80 BN80B4**	312
2.4	2711	1.8	595.0	50000	**A704_595.0 S2 M2SA4**	308	**A704_595.0 P80 BN80B4**	309
2.4	2669	1.0	585.8	30000	**A604_585.8 S2 M2SA4**	304	**A604_585.8 P80 BN80B4**	305
2.5	2553	3.1	560.5	65000	**A804_560.5 S2 M2SA4**	311	**A804_560.5 P80 BN80B4**	312
2.6	2469	1.1	542.0	30000	**A604_542.0 S2 M2SA4**	304	**A604_542.0 P80 BN80B4**	305
2.7	2348	2.1	515.4	50000	**A704_515.4 S2 M2SA4**	308	**A704_515.4 P80 BN80B4**	309
2.8	2279	1.2	500.3	30000	**A604_500.3 S2 M2SA4**	304	**A604_500.3 P80 BN80B4**	305

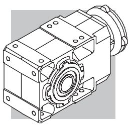

0.75 kW

n_2 min-1	M_2 Nm	S	i	R_{n2} N	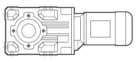	⇹		⇹
2.9	2167	2.3	475.8	50000	**A704_475.8 S2 M2SA4**	308	**A704_475.8 P80 BN80B4**	309
3.2	1997	1.4	438.4	30000	**A604_438.4 S2 M2SA4**	304	**A604_438.4 P80 BN80B4**	305
3.5	1844	1.5	404.7	30000	**A604_404.7 S2 M2SA4**	304	**A604_404.7 P80 BN80B4**	305
3.5	1823	2.7	400.2	50000	**A704_400.2 S2 M2SA4**	308	**A704_400.2 P80 BN80B4**	309
3.8	1683	3.0	369.4	50000	**A704_369.4 S2 M2SA4**	308	**A704_369.4 P80 BN80B4**	309
3.8	1666	0.9	365.6	20000	**A504_365.6 S2 M2SA4**	296	**A504_365.6 P80 BN80B4**	297
4.0	1600	1.8	351.2	30000	**A604_351.2 S2 M2SA4**	304	**A604_351.2 P80 BN80B4**	305
4.2	1515	1.0	332.6	20000	**A504_332.6 S2 M2SA4**	296	**A504_332.6 P80 BN80B4**	297
4.3	1477	1.9	324.2	30000	**A604_324.2 S2 M2SA4**	304	**A604_324.2 P80 BN80B4**	305
4.4	1441	3.5	316.4	50000	**A704_316.4 S2 M2SA4**	308	**A704_316.4 P80 BN80B4**	309
4.9	1307	1.1	286.8	20000	**A504_286.8 S2 M2SA4**	296	**A504_286.8 P80 BN80B4**	297
4.9	1304	2.1	286.3	30000	**A604_286.3 S2 M2SA4**	304	**A604_286.3 P80 BN80B4**	305
5.3	1204	2.3	264.3	30000	**A604_264.3 S2 M2SA4**	304	**A604_264.3 P80 BN80B4**	305
5.4	1189	1.3	260.9	20000	**A504_260.9 S2 M2SA4**	296	**A504_260.9 P80 BN80B4**	297
6.0	1057	1.4	232.0	20000	**A504_232.0 S2 M2SA4**	296	**A504_232.0 P80 BN80B4**	297
6.2	1030	2.7	226.1	30000	**A604_226.1 S2 M2SA4**	304	**A604_226.1 P80 BN80B4**	305
6.6	961	1.6	211.0	20000	**A504_211.0 S2 M2SA4**	296	**A504_211.0 P80 BN80B4**	297
6.7	951	2.9	208.7	30000	**A604_208.7 S2 M2SA4**	304	**A604_208.7 P80 BN80B4**	305
7.1	920	0.9	197.5	15000	**A413_197.5 S2 M2SA4**	292	**A413_197.5 P80 BN80B4**	293
7.2	905	2.2	194.2	30000	**A553_194.2 S2 M2SA4**	300	**A553_194.2 P80 BN80B4**	301
7.3	888	1.7	190.6	20000	**A503_190.6 S2 M2SA4**	296	**A503_190.6 P80 BN80B4**	297
7.5	865	3.2	185.8	30000	**A603_185.8 S2 M2SA4**	304	**A603_185.8 P80 BN80B4**	305
7.6	859	1.0	184.4	15000	**A413_184.4 S2 M2SA4**	292	**A413_184.4 P80 BN80B4**	293
8.0	815	2.5	175.0	30000	**A553_175.0 S2 M2SA4**	300	**A553_175.0 P80 BN80B4**	301
8.1	808	1.9	173.4	20000	**A503_173.4 S2 M2SA4**	296	**A503_173.4 P80 BN80B4**	297
8.2	799	3.5	171.5	30000	**A603_171.5 S2 M2SA4**	304	**A603_171.5 P80 BN80B4**	305
8.7	747	2.7	160.4	30000	**A553_160.4 S2 M2SA4**	300	**A553_160.4 P80 BN80B4**	301
9.1	720	2.1	154.6	20000	**A503_154.6 S2 M2SA4**	296	**A503_154.6 P80 BN80B4**	297
9.5	684	1.2	146.9	15000	**A413_146.9 S2 M2SA4**	292	**A413_146.9 P80 BN80B4**	293
9.5	684	2.9	146.8	30000	**A553_146.8 S2 M2SA4**	300	**A553_146.8 P80 BN80B4**	301
10.0	655	2.3	140.6	20000	**A503_140.6 S2 M2SA4**	296	**A503_140.6 P80 BN80B4**	297
10.3	635	0.9	136.3	12000	**A353_136.3 S2 M2SA4**	288	**A353_136.3 P80 BN80B4**	289
10.5	618	3.2	132.7	30000	**A553_132.7 S2 M2SA4**	300	**A553_132.7 P80 BN80B4**	301
10.8	604	2.5	129.7	20000	**A503_129.7 S2 M2SA4**	296	**A503_129.7 P80 BN80B4**	297
11.3	577	3.5	123.9	30000	**A553_123.9 S2 M2SA4**	300	**A553_123.9 P80 BN80B4**	301
11.9	549	2.7	118.0	20000	**A503_118.0 S2 M2SA4**	296	**A503_118.0 P80 BN80B4**	297
12.0	545	1.0	116.9	12000	**A353_116.9 S2 M2SA4**	288	**A353_116.9 P80 BN80B4**	289
12.1	540	1.6	115.9	15000	**A413_115.9 S2 M2SA4**	292	**A413_115.9 P80 BN80B4**	293
12.8	510	2.9	109.4	20000	**A503_109.4 S2 M2SA4**	296	**A503_109.4 P80 BN80B4**	297
13.3	492	1.1	105.5	12000	**A353_105.5 S2 M2SA4**	288	**A353_105.5 P80 BN80B4**	289
14.1	464	3.2	99.5	20000	**A503_99.5 S2 M2SA4**	296	**A503_99.5 P80 BN80B4**	297
14.6	460	1.2	95.6	12000	**A352_95.6 S2 M2SA4**	288	**A352_95.6 P80 BN80B4**	289
15.1	432	1.9	92.8	15000	**A413_92.8 S2 M2SA4**	292	**A413_92.8 P80 BN80B4**	293
17.0	397	1.5	82.5	12000	**A352_82.5 S2 M2SA4**	288	**A352_82.5 P80 BN80B4**	289
17.7	381	2.2	79.2	15000	**A412_79.2 S2 M2SA4**	292	**A412_79.2 P80 BN80B4**	293
18.3	368	1.0	76.5	8580	**A302_76.5 S2 M2SA4**	284	**A302_76.5 P80 BN80B4**	285
18.8	357	1.7	74.3	12000	**A352_74.3 S2 M2SA4**	288	**A352_74.3 P80 BN80B4**	289
19.6	343	2.5	71.3	15000	**A412_71.3 S2 M2SA4**	292	**A412_71.3 P80 BN80B4**	293
21.2	318	1.2	66.0	8360	**A302_66.0 S2 M2SA4**	284	**A302_66.0 P80 BN80B4**	285
21.3	317	1.9	65.8	12000	**A352_65.8 S2 M2SA4**	288	**A352_65.8 P80 BN80B4**	289
21.8	309	2.8	64.2	15000	**A412_64.2 S2 M2SA4**	292	**A412_64.2 P80 BN80B4**	293

0.75 kW

n2 min-1	M2 Nm	S	i	Rn2 N			IEC	
23.2	290	2.1	60.4	12000	**A352_60.4 S2 M2SA4**	288	**A352_60.4 P80 BN80B4**	289
23.6	286	1.4	59.4	8190	**A302_59.4 S2 M2SA4**	284	**A302_59.4 P80 BN80B4**	285
23.8	283	3.0	58.8	15000	**A412_58.8 S2 M2SA4**	292	**A412_58.8 P80 BN80B4**	293
25.8	261	2.3	54.3	12000	**A352_54.3 S2 M2SA4**	288	**A352_54.3 P80 BN80B4**	289
26.1	258	1.0	53.7	5210	**A202_53.7 S2 M2SA4**	280	**A202_53.7 P80 BN80B4**	281
26.3	256	3.3	53.1	15000	**A412_53.1 S2 M2SA4**	292	**A412_53.1 P80 BN80B4**	293
26.6	253	1.6	52.7	7990	**A302_52.7 S2 M2SA4**	284	**A302_52.7 P80 BN80B4**	285
28.5	236	2.5	49.1	12000	**A352_49.1 S2 M2SA4**	288	**A352_49.1 P80 BN80B4**	289
29.0	232	1.1	48.3	5140	**A202_48.3 S2 M2SA4**	280	**A202_48.3 P80 BN80B4**	281
29.0	232	1.8	48.3	7840	**A302_48.3 S2 M2SA4**	284	**A302_48.3 P80 BN80B4**	285
31	220	2.7	45.8	12000	**A352_45.8 S2 M2SA4**	288	**A352_45.8 P80 BN80B4**	289
32	209	2.0	43.4	7660	**A302_43.4 S2 M2SA4**	284	**A302_43.4 P80 BN80B4**	285
32	208	1.2	43.2	5060	**A202_43.2 S2 M2SA4**	280	**A202_43.2 P80 BN80B4**	281
34	201	3.0	41.8	11900	**A352_41.8 S2 M2SA4**	288	**A352_41.8 P80 BN80B4**	289
35	191	1.3	39.6	4990	**A202_39.6 S2 M2SA4**	280	**A202_39.6 P80 BN80B4**	281
36	189	2.2	39.3	7480	**A302_39.3 S2 M2SA4**	284	**A302_39.3 P80 BN80B4**	285
38	176	2.3	36.6	7360	**A302_36.6 S2 M2SA4**	284	**A302_36.6 P80 BN80B4**	285
38	176	3.4	36.6	11500	**A352_36.6 S2 M2SA4**	288	**A352_36.6 P80 BN80B4**	289
40	170	1.5	35.4	4890	**A202_35.4 S2 M2SA4**	280	**A202_35.4 P80 BN80B4**	281
40	169	0.9	35.1	4320	**A102_35.1 S2 M2SA4**	276	**A102_35.1 P80 BN80B4**	277
42	161	2.5	33.4	7200	**A302_33.4 S2 M2SA4**	284	**A302_33.4 P80 BN80B4**	285
43	155	1.0	32.2	5080	**A102_32.2 S2 M2SA4**	276	**A102_32.2 P80 BN80B4**	277
45	151	1.7	31.3	4780	**A202_31.3 S2 M2SA4**	280	**A202_31.3 P80 BN80B4**	281
48	141	2.9	29.3	6960	**A302_29.3 S2 M2SA4**	284	**A302_29.3 P80 BN80B4**	285
48	141	1.8	29.2	4710	**A202_29.2 S2 M2SA4**	280	**A202_29.2 P80 BN80B4**	281
49	137	1.1	28.6	4200	**A102_28.6 S2 M2SA4**	276	**A102_28.6 P80 BN80B4**	277
53	128	3.2	26.5	6790	**A302_26.5 S2 M2SA4**	284	**A302_26.5 P80 BN80B4**	285
53	127	2.0	26.5	4620	**A202_26.5 S2 M2SA4**	280	**A202_26.5 P80 BN80B4**	281
55	123	1.2	25.5	4900	**A102_25.5 S2 M2SA4**	276	**A102_25.5 P80 BN80B4**	277
59	114	1.3	23.8	4070	**A102_23.8 S2 M2SA4**	276	**A102_23.8 P80 BN80B4**	277
61	111	2.2	23.1	4480	**A202_23.1 S2 M2SA4**	280	**A202_23.1 P80 BN80B4**	281
66	103	1.0	21.4	2210	**A052_21.4 S2 M2SA4**	273	**A052_21.4 P80 BN80B4**	273
66	103	1.5	21.4	4740	**A102_21.4 S2 M2SA4**	276	**A102_21.4 P80 BN80B4**	277
66	102	2.4	21.2	4390	**A202_21.2 S2 M2SA4**	280	**A202_21.2 P80 BN80B4**	281
75	89	1.1	18.6	2190	**A052_18.6 S2 M2SA4**	273	**A052_18.6 P80 BN80B4**	273
75	89	1.7	18.6	3880	**A102_18.6 S2 M2SA4**	276	**A102_18.6 P80 BN80B4**	277
77	87	2.9	18.1	4230	**A202_18.1 S2 M2SA4**	280	**A202_18.1 P80 BN80B4**	281
85	79	1.3	16.4	2160	**A052_16.4 S2 M2SA4**	273	**A052_16.4 P80 BN80B4**	273
85	79	1.9	16.4	4490	**A102_16.4 S2 M2SA4**	276	**A102_16.4 P80 BN80B4**	277
87	78	3.2	16.2	4110	**A202_16.2 S2 M2SA4**	280	**A202_16.2 P80 BN80B4**	281
101	67	1.5	13.9	2110	**A052_13.9 S2 M2SA4**	273	**A052_13.9 P80 BN80B4**	273
101	67	2.2	13.9	3640	**A102_13.9 S2 M2SA4**	276	**A102_13.9 P80 BN80B4**	277
114	59	1.7	12.3	2080	**A052_12.3 S2 M2SA4**	273	**A052_12.3 P80 BN80B4**	273
114	59	2.4	12.3	3530	**A102_12.3 S2 M2SA4**	276	**A102_12.3 P80 BN80B4**	277
133	51	2.0	10.6	2010	**A052_10.6 S2 M2SA4**	273	**A052_10.6 P80 BN80B4**	273
133	51	3.0	10.6	3400	**A102_10.6 S2 M2SA4**	276	**A102_10.6 P80 BN80B4**	277
146	46	2.2	9.6	1990	**A052_9.6 S2 M2SA4**	273	**A052_9.6 P80 BN80B4**	273
146	46	3.0	9.6	3320	**A102_9.6 S2 M2SA4**	276	**A102_9.6 P80 BN80B4**	277
164	41	2.4	8.5	1940	**A052_8.5 S2 M2SA4**	273	**A052_8.5 P80 BN80B4**	273
164	41	3.4	8.5	3820	**A102_8.5 S2 M2SA4**	276	**A102_8.5 P80 BN80B4**	277
194	35	2.9	7.2	1870	**A052_7.2 S2 M2SA4**	273	**A052_7.2 P80 BN80B4**	273

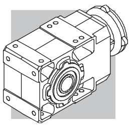

0.75 kW

n_2 min^{-1}	M_2 Nm	S	i	R_{n2} N	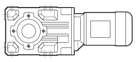		IEC	
221	30	3.3	6.3	1810	**A052_6.3 S2 M2SA4**	273	**A052_6.3 P80 BN80B4**	273
256	26	3.6	5.5	1750	**A052_5.5 S2 M2SA4**	273	**A052_5.5 P80 BN80B4**	273
266	25	3.2	10.6	1720	**A052_10.6 S1 M1LA2**	273	**A052_10.6 P80 BN80A2**	273
292	23	4.1	9.6	1690	**A052_9.6 S1 M1LA2**	273	**A052_9.6 P80 BN80A2**	273
330	20	4.4	8.5	1640	**A052_8.5 S1 M1LA2**	273	**A052_8.5 P80 BN80A2**	273
390	17.3	4.9	7.2	1570	**A052_7.2 S1 M1LA2**	273	**A052_7.2 P80 BN80A2**	273
444	15.2	5.3	6.3	1510	**A052_6.3 S1 M1LA2**	273	**A052_6.3 P80 BN80A2**	273
514	13.1	5.7	5.5	1450	**A052_5.5 S1 M1LA2**	273	**A052_5.5 P80 BN80A2**	273

1.1 kW

n_2 min^{-1}	M_2 Nm	S	i	R_{n2} N	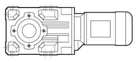		IEC	
0.61	15320	0.9	1507	75000	**A904_1507 S3 M3SA6**	314	**A904_1507 P90 BN90L6**	315
0.69	13462	1.0	1324	75000	**A904_1324 S3 M3SA6**	314	**A904_1324 P90 BN90L6**	315
0.75	12427	1.1	1222	75000	**A904_1222 S3 M3SA6**	314	**A904_1222 P90 BN90L6**	315
0.86	10907	1.3	1632	75000	**A904_1632 S2 M2SB4**	314	**A904_1632 P90 BN90S4**	315
0.93	10068	1.4	1507	75000	**A904_1507 S2 M2SB4**	314	**A904_1507 P90 BN90S4**	315
1.0	8953	0.9	1340	65000	**A804_1340 S2 M2SB4**	311	**A804_1340 P90 BN90S4**	312
1.1	8847	1.6	1324	75000	**A904_1324 S2 M2SB4**	314	**A904_1324 P90 BN90S4**	315
1.1	8264	1.0	1237	65000	**A804_1237 S2 M2SB4**	311	**A804_1237 P90 BN90S4**	312
1.1	8166	1.7	1222	75000	**A904_1222 S2 M2SB4**	314	**A904_1222 P90 BN90S4**	315
1.3	7421	1.9	1111	75000	**A904_1111 S2 M2SB4**	314	**A904_1111 P90 BN90S4**	315
1.3	7249	1.1	1085	65000	**A804_1085 S2 M2SB4**	311	**A804_1085 P90 BN90S4**	312
1.4	6850	2.0	1025	75000	**A904_1025 S2 M2SB4**	314	**A904_1025 P90 BN90S4**	315
1.4	6691	1.2	1001	65000	**A804_1001 S2 M2SB4**	311	**A804_1001 P90 BN90S4**	312
1.5	6262	2.2	937.2	75000	**A904_937.2 S2 M2SB4**	314	**A904_937.2 P90 BN90S4**	315
1.6	6005	1.3	898.7	65000	**A804_898.7 S2 M2SB4**	311	**A804_898.7 P90 BN90S4**	312
1.6	5780	2.4	865.1	75000	**A904_865.1 S2 M2SB4**	314	**A904_865.1 P90 BN90S4**	315
1.6	5715	0.9	855.3	50000	**A704_855.3 S2 M2SB4**	308	**A704_855.3 P90 BN90S4**	309
1.7	5543	1.4	829.5	65000	**A804_829.5 S2 M2SB4**	311	**A804_829.5 P90 BN90S4**	312
1.8	5124	2.7	766.9	75000	**A904_766.9 S2 M2SB4**	314	**A904_766.9 P90 BN90S4**	315
1.8	5104	1.0	763.9	50000	**A704_763.9 S2 M2SB4**	308	**A704_763.9 P90 BN90S4**	309
1.8	5092	1.6	762.1	65000	**A804_762.1 S2 M2SB4**	311	**A804_762.1 P90 BN90S4**	312
2.0	4730	3.0	707.9	75000	**A904_707.9 S2 M2SB4**	314	**A904_707.9 P90 BN90S4**	315
2.0	4711	1.1	705.1	50000	**A704_705.1 S2 M2SB4**	308	**A704_705.1 P90 BN90S4**	309
2.0	4700	1.7	703.5	65000	**A804_703.5 S2 M2SB4**	311	**A804_703.5 P90 BN90S4**	312
2.2	4307	1.2	644.6	50000	**A704_644.6 S2 M2SB4**	308	**A704_644.6 P90 BN90S4**	309
2.3	4057	2.0	607.2	65000	**A804_607.2 S2 M2SB4**	311	**A804_607.2 P90 BN90S4**	312
2.3	4019	3.5	601.6	75000	**A904_601.6 S2 M2SB4**	314	**A904_601.6 P90 BN90S4**	315
2.4	3976	1.3	595.0	50000	**A704_595.0 S2 M2SB4**	308	**A704_595.0 P90 BN90S4**	309
2.5	3745	2.1	560.5	65000	**A804_560.5 S2 M2SB4**	311	**A804_560.5 P90 BN90S4**	312
2.7	3444	1.5	515.4	50000	**A704_515.4 S2 M2SB4**	308	**A704_515.4 P90 BN90S4**	309
2.9	3200	2.5	478.9	65000	**A804_478.9 S2 M2SB4**	311	**A804_478.9 P90 BN90S4**	312
2.9	3179	1.6	475.8	50000	**A704_475.8 S2 M2SB4**	308	**A704_475.8 P90 BN90S4**	309
3.2	2954	2.7	442.1	65000	**A804_442.1 S2 M2SB4**	311	**A804_442.1 P90 BN90S4**	312
3.2	2929	1.0	438.4	30000	**A604_438.4 S2 M2SB4**	304	**A604_438.4 P90 BN90S4**	305
3.5	2704	1.0	404.7	30000	**A604_404.7 S2 M2SB4**	304	**A604_404.7 P90 BN90S4**	305
3.5	2674	1.9	400.2	50000	**A704_400.2 S2 M2SB4**	308	**A704_400.2 P90 BN90S4**	309

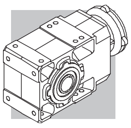

1.1 kW

n_2 min^{-1}	M_2 Nm	S	i	R_{n2} N			IEC	
3.7	2562	3.1	383.5	65000	**A804_383.5 S2 M2SB4**	311	**A804_383.5 P90 BN90S4**	312
3.8	2468	2.0	369.4	50000	**A704_369.4 S2 M2SB4**	308	**A704_369.4 P90 BN90S4**	309
4.0	2365	3.4	354.0	65000	**A804_354.0 S2 M2SB4**	311	**A804_354.0 P90 BN90S4**	312
4.0	2347	1.2	351.2	30000	**A604_351.2 S2 M2SB4**	304	**A604_351.2 P90 BN90S4**	305
4.3	2166	1.3	324.2	30000	**A604_324.2 S2 M2SB4**	304	**A604_324.2 P90 BN90S4**	305
4.4	2114	2.4	316.4	50000	**A704_316.4 S2 M2SB4**	308	**A704_316.4 P90 BN90S4**	309
4.8	1951	2.6	292.0	50000	**A704_292.0 S2 M2SB4**	308	**A704_292.0 P90 BN90S4**	309
4.9	1913	1.5	286.3	30000	**A604_286.3 S2 M2SB4**	304	**A604_286.3 P90 BN90S4**	305
5.3	1766	1.6	264.3	30000	**A604_264.3 S2 M2SB4**	304	**A604_264.3 P90 BN90S4**	305
5.4	1743	0.9	260.9	20000	**A504_260.9 S2 M2SB4**	296	**A504_260.9 P90 BN90S4**	297
5.9	1594	3.1	238.6	50000	**A704_238.6 S2 M2SB4**	308	**A704_238.6 P90 BN90S4**	309
6.0	1550	1.0	232.0	20000	**A504_232.0 S2 M2SB4**	296	**A504_232.0 P90 BN90S4**	297
6.2	1511	1.9	226.1	30000	**A604_226.1 S2 M2SB4**	304	**A604_226.1 P90 BN90S4**	305
6.4	1472	3.4	220.3	50000	**A704_220.3 S2 M2SB4**	308	**A704_220.3 P90 BN90S4**	309
6.6	1410	1.1	211.0	20000	**A504_211.0 S2 M2SB4**	296	**A504_211.0 P90 BN90S4**	297
6.7	1395	2.0	208.7	30000	**A604_208.7 S2 M2SB4**	304	**A604_208.7 P90 BN90S4**	305
7.2	1327	1.5	194.2	30000	**A553_194.2 S2 M2SB4**	300	**A553_194.2 P90 BN90S4**	301
7.3	1302	1.2	190.6	20000	**A503_190.6 S2 M2SB4**	296	**A503_190.6 P90 BN90S4**	297
7.5	1269	2.2	185.8	30000	**A603_185.8 S2 M2SB4**	304	**A603_185.8 P90 BN90S4**	305
8.0	1196	1.7	175.0	30000	**A553_175.0 S2 M2SB4**	300	**A553_175.0 P90 BN90S4**	301
8.1	1184	1.3	173.4	20000	**A503_173.4 S2 M2SB4**	296	**A503_173.4 P90 BN90S4**	297
8.2	1171	2.4	171.5	30000	**A603_171.5 S2 M2SB4**	304	**A603_171.5 P90 BN90S4**	305
8.7	1096	1.8	160.4	30000	**A553_160.4 S2 M2SB4**	300	**A553_160.4 P90 BN90S4**	301
9.0	1066	2.6	156.0	30000	**A603_156.0 S2 M2SB4**	304	**A603_156.0 P90 BN90S4**	305
9.1	1056	1.4	154.6	20000	**A503_154.6 S2 M2SB4**	296	**A503_154.6 P90 BN90S4**	297
9.5	1003	2.0	146.8	30000	**A553_146.8 S2 M2SB4**	300	**A553_146.8 P90 BN90S4**	301
9.7	984	2.8	144.0	30000	**A603_144.0 S2 M2SB4**	304	**A603_144.0 P90 BN90S4**	305
10.0	961	1.6	140.6	20000	**A503_140.6 S2 M2SB4**	296	**A503_140.6 P90 BN90S4**	297
10.5	911	3.1	133.3	30000	**A603_133.3 S2 M2SB4**	304	**A603_133.3 P90 BN90S4**	305
10.5	907	2.2	132.7	30000	**A553_132.7 S2 M2SB4**	300	**A553_132.7 P90 BN90S4**	301
10.8	886	1.7	129.7	20000	**A503_129.7 S2 M2SB4**	296	**A503_129.7 P90 BN90S4**	297
11.3	846	2.4	123.9	30000	**A553_123.9 S2 M2SB4**	300	**A553_123.9 P90 BN90S4**	301
11.4	841	3.3	123.0	30000	**A603_123.0 S2 M2SB4**	304	**A603_123.0 P90 BN90S4**	305
11.9	806	1.9	118.0	20000	**A503_118.0 S2 M2SB4**	296	**A503_118.0 P90 BN90S4**	297
12.1	792	1.1	115.9	15000	**A413_115.9 S2 M2SB4**	292	**A413_115.9 P90 BN90S4**	293
12.8	748	2.0	109.4	20000	**A503_109.4 S2 M2SB4**	296	**A503_109.4 P90 BN90S4**	297
13.8	693	2.9	101.4	30000	**A553_101.4 S2 M2SB4**	300	**A553_101.4 P90 BN90S4**	301
14.1	680	2.2	99.5	20000	**A503_99.5 S2 M2SB4**	296	**A503_99.5 P90 BN90S4**	297
15.1	634	1.3	92.8	15000	**A413_92.8 S2 M2SB4**	292	**A413_92.8 P90 BN90S4**	293
15.6	612	2.5	89.5	20000	**A503_89.5 S2 M2SB4**	296	**A503_89.5 P90 BN90S4**	297
17.0	582	1.0	82.5	12000	**A352_82.5 S2 M2SB4**	288	**A352_82.5 P90 BN90S4**	289
17.2	556	2.7	81.5	20000	**A503_81.5 S2 M2SB4**	296	**A503_81.5 P90 BN90S4**	297
17.7	559	1.5	79.2	15000	**A412_79.2 S2 M2SB4**	292	**A412_79.2 P90 BN90S4**	293
18.8	524	1.1	74.3	12000	**A352_74.3 S2 M2SB4**	288	**A352_74.3 P90 BN90S4**	289
19.6	503	1.7	71.3	15000	**A412_71.3 S2 M2SB4**	292	**A412_71.3 P90 BN90S4**	293
19.9	480	3.1	70.2	20000	**A503_70.2 S2 M2SB4**	296	**A503_70.2 P90 BN90S4**	297
21.3	465	1.3	65.8	12000	**A352_65.8 S2 M2SB4**	288	**A352_65.8 P90 BN90S4**	289
21.8	453	1.9	64.2	15000	**A412_64.2 S2 M2SB4**	292	**A412_64.2 P90 BN90S4**	293
21.9	436	3.4	63.9	20000	**A503_63.9 S2 M2SB4**	296	**A503_63.9 P90 BN90S4**	297
23.2	426	1.4	60.4	12000	**A352_60.4 S2 M2SB4**	288	**A352_60.4 P90 BN90S4**	289
23.6	419	1.0	59.4	7420	**A302_59.4 S2 M2SB4**	284	**A302_59.4 P90 BN90S4**	285

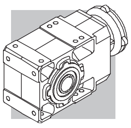

1.1 kW

n2 min-1	M2 Nm	S	i	Rn2 N	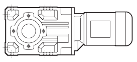		IEC	
23.8	415	2.0	58.8	15000	**A412_58.8 S2 M2SB4**	292	**A412_58.8 P90 BN90S4**	293
25.8	383	1.6	54.3	12000	**A352_54.3 S2 M2SB4**	288	**A352_54.3 P90 BN90S4**	289
26.3	375	2.3	53.1	15000	**A412_53.1 S2 M2SB4**	292	**A412_53.1 P90 BN90S4**	293
26.6	372	1.1	52.7	7310	**A302_52.7 S2 M2SB4**	284	**A302_52.7 P90 BN90S4**	285
28.5	346	1.7	49.1	11800	**A352_49.1 S2 M2SB4**	288	**A352_49.1 P90 BN90S4**	289
29.0	341	1.2	48.3	7220	**A302_48.3 S2 M2SB4**	284	**A302_48.3 P90 BN90S4**	285
29.0	341	2.5	48.3	15000	**A412_48.3 S2 M2SB4**	292	**A412_48.3 P90 BN90S4**	293
31	323	1.9	45.8	11700	**A352_45.8 S2 M2SB4**	288	**A352_45.8 P90 BN90S4**	289
31	318	2.6	45.1	15000	**A412_45.1 S2 M2SB4**	292	**A412_45.1 P90 BN90S4**	293
32	306	1.3	43.4	7100	**A302_43.4 S2 M2SB4**	284	**A302_43.4 P90 BN90S4**	285
34	295	2.0	41.8	11400	**A352_41.8 S2 M2SB4**	288	**A352_41.8 P90 BN90S4**	289
36	277	1.5	39.3	6970	**A302_39.3 S2 M2SB4**	284	**A302_39.3 P90 BN90S4**	285
38	259	1.6	36.6	6880	**A302_36.6 S2 M2SB4**	284	**A302_36.6 P90 BN90S4**	285
38	258	2.3	36.6	11100	**A352_36.6 S2 M2SB4**	288	**A352_36.6 P90 BN90S4**	289
39	253	3.1	35.9	14300	**A412_35.9 S2 M2SB4**	292	**A412_35.9 P90 BN90S4**	293
40	250	1.0	35.4	4380	**A202_35.4 S2 M2SB4**	280	**A202_35.4 P90 BN90S4**	281
42	236	1.7	33.4	6760	**A302_33.4 S2 M2SB4**	284	**A302_33.4 P90 BN90S4**	285
42	234	2.6	33.2	10800	**A352_33.2 S2 M2SB4**	288	**A352_33.2 P90 BN90S4**	289
45	221	1.1	31.3	4320	**A202_31.3 S2 M2SB4**	280	**A202_31.3 P90 BN90S4**	281
48	207	2.0	29.3	6580	**A302_29.3 S2 M2SB4**	284	**A302_29.3 P90 BN90S4**	285
48	206	1.2	29.2	4290	**A202_29.2 S2 M2SB4**	280	**A202_29.2 P90 BN90S4**	281
49	201	3.0	28.4	10400	**A352_28.4 S2 M2SB4**	288	**A352_28.4 P90 BN90S4**	289
53	187	2.2	26.5	6440	**A302_26.5 S2 M2SB4**	284	**A302_26.5 P90 BN90S4**	285
53	187	1.3	26.5	4230	**A202_26.5 S2 M2SB4**	280	**A202_26.5 P90 BN90S4**	281
55	181	3.3	25.7	10100	**A352_25.7 S2 M2SB4**	288	**A352_25.7 P90 BN90S4**	289
59	168	0.9	23.8	3640	**A102_23.8 S2 M2SB4**	276	**A102_23.8 P90 BN90S4**	277
61	163	1.5	23.1	4140	**A202_23.1 S2 M2SB4**	280	**A202_23.1 P90 BN90S4**	281
62	161	2.6	22.8	6220	**A302_22.8 S2 M2SB4**	284	**A302_22.8 P90 BN90S4**	285
66	151	1.0	21.4	4280	**A102_21.4 S2 M2SB4**	276	**A102_21.4 P90 BN90S4**	277
66	150	1.7	21.2	4080	**A202_21.2 S2 M2SB4**	280	**A202_21.2 P90 BN90S4**	281
68	145	2.8	20.5	6070	**A302_20.5 S2 M2SB4**	284	**A302_20.5 P90 BN90S4**	285
75	131	1.1	18.6	3540	**A102_18.6 S2 M2SB4**	276	**A102_18.6 P90 BN90S4**	277
77	128	2.0	18.1	3970	**A202_18.1 S2 M2SB4**	280	**A202_18.1 P90 BN90S4**	281
78	127	3.2	18.0	5880	**A302_18.0 S2 M2SB4**	284	**A302_18.0 P90 BN90S4**	285
85	116	1.3	16.4	4130	**A102_16.4 S2 M2SB4**	276	**A102_16.4 P90 BN90S4**	277
86	115	3.3	16.3	5740	**A302_16.3 S2 M2SB4**	284	**A302_16.3 P90 BN90S4**	285
87	114	2.2	16.2	3880	**A202_16.2 S2 M2SB4**	280	**A202_16.2 P90 BN90S4**	281
99	99	2.5	14.1	3770	**A202_14.1 S2 M2SB4**	280	**A202_14.1 P90 BN90S4**	281
101	98	1.0	13.9	1840	**A052_13.9 S2 M2SB4**	273		
101	98	1.5	13.9	3380	**A102_13.9 S2 M2SB4**	276	**A102_13.9 P90 BN90S4**	277
114	87	1.2	12.3	1850	**A052_12.3 S2 M2SB4**	273		
114	87	1.6	12.3	3300	**A102_12.3 S2 M2SB4**	276	**A102_12.3 P90 BN90S4**	277
117	84	2.5	12.0	3620	**A202_12.0 S2 M2SB4**	280	**A202_12.0 P90 BN90S4**	281
133	75	1.3	10.6	1810	**A052_10.6 S2 M2SB4**	273		
133	75	2.0	10.6	3210	**A102_10.6 S2 M2SB4**	276	**A102_10.6 P90 BN90S4**	277
135	73	3.1	10.3	3510	**A202_10.3 S2 M2SB4**	280	**A202_10.3 P90 BN90S4**	281
146	68	1.5	9.6	1810	**A052_9.6 S2 M2SB4**	273		
146	68	2.1	9.6	3140	**A102_9.6 S2 M2SB4**	276	**A102_9.6 P90 BN90S4**	277
149	66	3.2	9.4	3420	**A202_9.4 S2 M2SB4**	280	**A202_9.4 P90 BN90S4**	281
164	60	1.7	8.5	1780	**A052_8.5 S2 M2SB4**	273		
164	60	2.3	8.5	3630	**A102_8.5 S2 M2SB4**	276	**A102_8.5 P90 BN90S4**	277

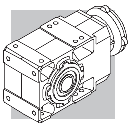

1.1 kW

n_2 min^{-1}	M_2 Nm	S	i	R_{n2} N			IEC	
194	51	2.0	7.2	1730	**A052_7.2 S2 M2SB4**	273		
194	51	2.8	7.2	2940	**A102_7.2 S2 M2SB4**	276	**A102_7.2 P90 BN90S4**	277
221	45	2.2	6.3	1690	**A052_6.3 S2 M2SB4**	273		
221	45	3.1	6.3	3390	**A102_6.3 S2 M2SB4**	276	**A102_6.3 P90 BN90S4**	277
228	43	3.2	12.3	2830	**A102_12.3 S2 M2SA2**	276	**A102_12.3 P80 BN80B2**	277
256	39	2.5	5.5	1640	**A052_5.5 S2 M2SB4**	273		
291	34	2.8	9.6	1600	**A052_9.6 S2 M2SA2**	273	**A052_9.6 P80 BN80B2**	273
329	30	3.0	8.5	1560	**A052_8.5 S2 M2SA2**	273	**A052_8.5 P80 BN80B2**	273
388	25	3.3	7.2	1500	**A052_7.2 S2 M2SA2**	273	**A052_7.2 P80 BN80B2**	273
442	22	3.6	6.3	1450	**A052_6.3 S2 M2SA2**	273	**A052_6.3 P80 BN80B2**	273
512	19.3	3.9	5.5	1400	**A052_5.5 S2 M2SA2**	273	**A052_5.5 P80 BN80B2**	273

1.5 kW

n_2 min^{-1}	M_2 Nm	S	i	R_{n2} N			IEC	
0.86	14767	0.9	1632	75000	**A904_1632 S3 M3SA4**	314	**A904_1632 P90 BN90LA4**	315
0.94	13631	1.0	1507	75000	**A904_1507 S3 M3SA4**	314	**A904_1507 P90 BN90LA4**	315
1.1	11978	1.2	1324	75000	**A904_1324 S3 M3SA4**	314	**A904_1324 P90 BN90LA4**	315
1.2	11057	1.3	1222	75000	**A904_1222 S3 M3SA4**	314	**A904_1222 P90 BN90LA4**	315
1.3	10047	1.4	1111	75000	**A904_1111 S3 M3SA4**	314	**A904_1111 P90 BN90LA4**	315
1.4	9274	1.5	1025	75000	**A904_1025 S3 M3SA4**	314	**A904_1025 P90 BN90LA4**	315
1.4	9060	0.9	1001	65000	**A804_1001 S3 M3SA4**	311	**A804_1001 P90 BN90LA4**	312
1.5	8478	1.7	937.2	75000	**A904_937.2 S3 M3SA4**	314	**A904_937.2 P90 BN90LA4**	315
1.6	8130	1.0	898.7	65000	**A804_898.7 S3 M3SA4**	311	**A804_898.7 P90 BN90LA4**	312
1.6	7826	1.8	865.1	75000	**A904_865.1 S3 M3SA4**	314	**A904_865.1 P90 BN90LA4**	315
1.7	7505	1.1	829.5	65000	**A804_829.5 S3 M3SA4**	311	**A804_829.5 P90 BN90LA4**	312
1.8	6938	2.0	766.9	75000	**A904_766.9 S3 M3SA4**	314	**A904_766.9 P90 BN90LA4**	315
1.9	6894	1.2	762.1	65000	**A804_762.1 S3 M3SA4**	311	**A804_762.1 P90 BN90LA4**	312
2.0	6404	2.2	707.9	75000	**A904_707.9 S3 M3SA4**	314	**A904_707.9 P90 BN90LA4**	315
2.0	6364	1.3	703.5	65000	**A804_703.5 S3 M3SA4**	311	**A804_703.5 P90 BN90LA4**	312
2.2	5832	0.9	644.6	50000	**A704_644.6 S3 M3SA4**	308	**A704_644.6 P90 BN90LA4**	309
2.3	5493	1.5	607.2	65000	**A804_607.2 S3 M3SA4**	311	**A804_607.2 P90 BN90LA4**	312
2.3	5442	2.6	601.6	75000	**A904_601.6 S3 M3SA4**	314	**A904_601.6 P90 BN90LA4**	315
2.4	5383	0.9	595.0	50000	**A704_595.0 S3 M3SA4**	308	**A704_595.0 P90 BN90LA4**	309
2.5	5070	1.6	560.5	65000	**A804_560.5 S3 M3SA4**	311	**A804_560.5 P90 BN90LA4**	312
2.5	5024	2.8	555.3	75000	**A904_555.3 S3 M3SA4**	314	**A904_555.3 P90 BN90LA4**	315
2.7	4663	1.1	515.4	50000	**A704_515.4 S3 M3SA4**	308	**A704_515.4 P90 BN90LA4**	309
2.9	4402	3.2	486.6	75000	**A904_486.6 S3 M3SA4**	314	**A904_486.6 P90 BN90LA4**	315
2.9	4333	1.8	478.9	65000	**A804_478.9 S3 M3SA4**	311	**A804_478.9 P90 BN90LA4**	312
3.0	4304	1.2	475.8	50000	**A704_475.8 S3 M3SA4**	308	**A704_475.8 P90 BN90LA4**	309
3.1	4063	3.4	449.2	75000	**A904_449.2 S3 M3SA4**	314	**A904_449.2 P90 BN90LA4**	315
3.2	3999	2.0	442.1	65000	**A804_442.1 S3 M3SA4**	311	**A804_442.1 P90 BN90LA4**	312
3.5	3620	1.4	400.2	50000	**A704_400.2 S3 M3SA4**	308	**A704_400.2 P90 BN90LA4**	309
3.7	3469	2.3	383.5	65000	**A804_383.5 S3 M3SA4**	311	**A804_383.5 P90 BN90LA4**	312
3.8	3342	1.5	369.4	50000	**A704_369.4 S3 M3SA4**	308	**A704_369.4 P90 BN90LA4**	309
4.0	3202	2.5	354.0	65000	**A804_354.0 S3 M3SA4**	311	**A804_354.0 P90 BN90LA4**	312
4.0	3177	0.9	351.2	30000	**A604_351.2 S3 M3SA4**	304	**A604_351.2 P90 BN90LA4**	305
4.3	2933	1.0	324.2	30000	**A604_324.2 S3 M3SA4**	304	**A604_324.2 P90 BN90LA4**	305

1.5 kW

n_2 min^{-1}	M_2 Nm	S	i	R_{n2} N	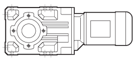		IEC	
4.5	2862	1.7	316.4	50000	**A704_316.4 S3 M3SA4**	308	**A704_316.4 P90 BN90LA4**	309
4.7	2718	2.9	300.4	65000	**A804_300.4 S3 M3SA4**	311	**A804_300.4 P90 BN90LA4**	312
4.8	2642	1.9	292.0	50000	**A704_292.0 S3 M3SA4**	308	**A704_292.0 P90 BN90LA4**	309
4.9	2590	1.1	286.3	30000	**A604_286.3 S3 M3SA4**	304	**A604_286.3 P90 BN90LA4**	305
5.1	2509	3.2	277.3	65000	**A804_277.3 S3 M3SA4**	311	**A804_277.3 P90 BN90LA4**	312
5.3	2391	1.2	264.3	30000	**A604_264.3 S3 M3SA4**	304	**A604_264.3 P90 BN90LA4**	305
5.9	2159	2.3	238.6	50000	**A704_238.6 S3 M3SA4**	308	**A704_238.6 P90 BN90LA4**	309
6.2	2046	1.4	226.1	30000	**A604_226.1 S3 M3SA4**	304	**A604_226.1 P90 BN90LA4**	305
6.4	1993	2.5	220.3	50000	**A704_220.3 S3 M3SA4**	308	**A704_220.3 P90 BN90LA4**	309
6.8	1888	1.5	208.7	30000	**A604_208.7 S3 M3SA4**	304	**A604_208.7 P90 BN90LA4**	305
7.3	1796	1.1	194.2	30000	**A553_194.2 S3 M3SA4**	300	**A553_194.2 P90 BN90LA4**	301
7.6	1718	1.6	185.8	30000	**A603_185.8 S3 M3SA4**	304	**A603_185.8 P90 BN90LA4**	305
7.7	1664	3.0	183.9	50000	**A704_183.9 S3 M3SA4**	308	**A704_183.9 P90 BN90LA4**	309
8.1	1619	1.2	175.0	30000	**A553_175.0 S3 M3SA4**	300	**A553_175.0 P90 BN90LA4**	301
8.1	1604	0.9	173.4	20000	**A503_173.4 S3 M3SA4**	296	**A503_173.4 P90 BN90LA4**	297
8.2	1586	1.8	171.5	30000	**A603_171.5 S3 M3SA4**	304	**A603_171.5 P90 BN90LA4**	305
8.3	1536	3.3	169.8	50000	**A704_169.8 S3 M3SA4**	308	**A704_169.8 P90 BN90LA4**	309
8.8	1484	1.3	160.4	30000	**A553_160.4 S3 M3SA4**	300	**A553_160.4 P90 BN90LA4**	301
9.0	1443	1.9	156.0	30000	**A603_156.0 S3 M3SA4**	304	**A603_156.0 P90 BN90LA4**	305
9.1	1430	1.0	154.6	20000	**A503_154.6 S3 M3SA4**	296	**A503_154.6 P90 BN90LA4**	297
9.2	1422	2.8	153.7	50000	**A703_153.7 S3 M3SA4**	308	**A703_153.7 P90 BN90LA4**	309
9.6	1358	1.5	146.8	30000	**A553_146.8 S3 M3SA4**	300	**A553_146.8 P90 BN90LA4**	301
9.8	1332	2.1	144.0	30000	**A603_144.0 S3 M3SA4**	304	**A603_144.0 P90 BN90LA4**	305
10.0	1301	1.2	140.6	20000	**A503_140.6 S3 M3SA4**	296	**A503_140.6 P90 BN90LA4**	297
10.6	1233	2.3	133.3	30000	**A603_133.3 S3 M3SA4**	304	**A603_133.3 P90 BN90LA4**	305
10.6	1228	1.6	132.7	30000	**A553_132.7 S3 M3SA4**	300	**A553_132.7 P90 BN90LA4**	301
10.9	1199	1.3	129.7	20000	**A503_129.7 S3 M3SA4**	296	**A503_129.7 P90 BN90LA4**	297
11.4	1146	1.7	123.9	30000	**A553_123.9 S3 M3SA4**	300	**A553_123.9 P90 BN90LA4**	301
11.5	1138	2.5	123.0	30000	**A603_123.0 S3 M3SA4**	304	**A603_123.0 P90 BN90LA4**	305
12.0	1091	1.4	118.0	20000	**A503_118.0 S3 M3SA4**	296	**A503_118.0 P90 BN90LA4**	297
12.9	1012	1.5	109.4	20000	**A503_109.4 S3 M3SA4**	296	**A503_109.4 P90 BN90LA4**	297
13.1	997	2.8	107.8	30000	**A603_107.8 S3 M3SA4**	304	**A603_107.8 P90 BN90LA4**	305
13.9	938	2.1	101.4	30000	**A553_101.4 S3 M3SA4**	300	**A553_101.4 P90 BN90LA4**	301
14.2	921	1.6	99.5	20000	**A503_99.5 S3 M3SA4**	296	**A503_99.5 P90 BN90LA4**	297
14.2	920	3.0	99.5	30000	**A603_99.5 S3 M3SA4**	304	**A603_99.5 P90 BN90LA4**	305
15.2	858	0.9	92.8	15000	**A413_92.8 S3 M3SA4**	292	**A413_92.8 P90 BN90LA4**	293
15.7	828	1.8	89.5	20000	**A503_89.5 S3 M3SA4**	296	**A503_89.5 P90 BN90LA4**	297
16.3	799	3.5	86.4	30000	**A603_86.4 S3 M3SA4**	304	**A603_86.4 P90 BN90LA4**	305
17.3	753	2.0	81.5	20000	**A503_81.5 S3 M3SA4**	296	**A503_81.5 P90 BN90LA4**	297
17.7	736	2.7	79.5	30000	**A553_79.5 S3 M3SA4**	300	**A553_79.5 P90 BN90LA4**	301
17.8	757	1.1	79.2	15000	**A412_79.2 S3 M3SA4**	292	**A412_79.2 P90 BN90LA4**	293
19.8	681	1.2	71.3	15000	**A412_71.3 S3 M3SA4**	292	**A412_71.3 P90 BN90LA4**	293
20.1	650	2.3	70.2	20000	**A503_70.2 S3 M3SA4**	296	**A503_70.2 P90 BN90LA4**	297
21.4	629	1.0	65.8	11600	**A352_65.8 S3 M3SA4**	288	**A352_65.8 P90 BN90LA4**	289
21.9	595	3.4	64.3	30000	**A553_64.3 S3 M3SA4**	300	**A553_64.3 P90 BN90LA4**	301
22.0	613	1.4	64.2	15000	**A412_64.2 S3 M3SA4**	292	**A412_64.2 P90 BN90LA4**	293
22.1	591	2.5	63.9	20000	**A503_63.9 S3 M3SA4**	296	**A503_63.9 P90 BN90LA4**	297
23.4	577	1.0	60.4	11500	**A352_60.4 S3 M3SA4**	288	**A352_60.4 P90 BN90LA4**	289
24.0	562	1.5	58.8	15000	**A412_58.8 S3 M3SA4**	292	**A412_58.8 P90 BN90LA4**	293
24.8	526	2.9	56.8	20000	**A503_56.8 S3 M3SA4**	296	**A503_56.8 P90 BN90LA4**	297
26.0	519	1.2	54.3	11300	**A352_54.3 S3 M3SA4**	288	**A352_54.3 P90 BN90LA4**	289

1.5 kW

n_2 min^{-1}	M_2 Nm	S	i	R_{n2} N			IEC	
26.5	508	1.7	53.1	15000	**A412_53.1 S3 M3SA4**	292	**A412_53.1 P90 BN90LA4**	293
27.3	478	3.1	51.7	19700	**A503_51.7 S3 M3SA4**	296	**A503_51.7 P90 BN90LA4**	297
28.7	469	1.3	49.1	11100	**A352_49.1 S3 M3SA4**	288	**A352_49.1 P90 BN90LA4**	289
29.2	461	1.8	48.3	14900	**A412_48.3 S3 M3SA4**	292	**A412_48.3 P90 BN90LA4**	293
31	438	1.4	45.8	11000	**A352_45.8 S3 M3SA4**	288	**A352_45.8 P90 BN90LA4**	289
31	431	1.9	45.1	14600	**A412_45.1 S3 M3SA4**	292	**A412_45.1 P90 BN90LA4**	293
32	415	1.0	43.4	6450	**A302_43.4 S3 M3SA4**	284	**A302_43.4 P90 BN90LA4**	285
34	399	1.5	41.8	10800	**A352_41.8 S3 M3SA4**	288	**A352_41.8 P90 BN90LA4**	289
36	375	1.1	39.3	6380	**A302_39.3 S3 M3SA4**	284	**A302_39.3 P90 BN90LA4**	285
38	350	1.2	36.6	6330	**A302_36.6 S3 M3SA4**	284	**A302_36.6 P90 BN90LA4**	285
38	350	1.7	36.6	10500	**A352_36.6 S3 M3SA4**	288	**A352_36.6 P90 BN90LA4**	289
39	343	2.3	35.9	13800	**A412_35.9 S3 M3SA4**	292	**A412_35.9 P90 BN90LA4**	293
42	319	1.3	33.4	6260	**A302_33.4 S3 M3SA4**	284	**A302_33.4 P90 BN90LA4**	285
43	317	1.9	33.2	10300	**A352_33.2 S3 M3SA4**	288	**A352_33.2 P90 BN90LA4**	289
48	280	1.5	29.3	6140	**A302_29.3 S3 M3SA4**	284	**A302_29.3 P90 BN90LA4**	285
50	272	2.2	28.4	9940	**A352_28.4 S3 M3SA4**	288	**A352_28.4 P90 BN90LA4**	289
50	271	2.7	28.3	13000	**A412_28.3 S3 M3SA4**	292	**A412_28.3 P90 BN90LA4**	293
53	254	1.6	26.5	6040	**A302_26.5 S3 M3SA4**	284	**A302_26.5 P90 BN90LA4**	285
53	253	1.0	26.5	3790	**A202_26.5 S3 M3SA4**	280	**A202_26.5 P90 BN90LA4**	281
55	245	2.4	25.7	9710	**A352_25.7 S3 M3SA4**	288	**A352_25.7 P90 BN90LA4**	289
61	221	1.1	23.1	3760	**A202_23.1 S3 M3SA4**	280	**A202_23.1 P90 BN90LA4**	281
62	217	1.9	22.8	5870	**A302_22.8 S3 M3SA4**	284	**A302_22.8 P90 BN90LA4**	285
62	217	3.1	22.7	12200	**A412_22.7 S3 M3SA4**	292	**A412_22.7 P90 BN90LA4**	293
63	215	2.8	22.5	9400	**A352_22.5 S3 M3SA4**	288	**A352_22.5 P90 BN90LA4**	289
66	203	1.2	21.2	3730	**A202_21.2 S3 M3SA4**	280	**A202_21.2 P90 BN90LA4**	281
69	196	2.1	20.5	5760	**A302_20.5 S3 M3SA4**	284	**A302_20.5 P90 BN90LA4**	285
69	195	3.1	20.4	9170	**A352_20.4 S3 M3SA4**	288	**A352_20.4 P90 BN90LA4**	289
78	173	1.4	18.1	3660	**A202_18.1 S3 M3SA4**	280	**A202_18.1 P90 BN90LA4**	281
78	172	2.3	18.0	5600	**A302_18.0 S3 M3SA4**	284	**A302_18.0 P90 BN90LA4**	285
86	157	1.0	16.4	3720	**A102_16.4 S3 M3SA4**	276	**A102_16.4 P90 BN90LA4**	277
86	156	2.5	16.3	5480	**A302_16.3 S3 M3SA4**	284	**A302_16.3 P90 BN90LA4**	285
87	154	1.6	16.2	3600	**A202_16.2 S3 M3SA4**	280	**A202_16.2 P90 BN90LA4**	281
100	134	1.8	14.1	3530	**A202_14.1 S3 M3SA4**	280	**A202_14.1 P90 BN90LA4**	281
101	133	1.1	13.9	3090	**A102_13.9 S3 M3SA4**	276	**A102_13.9 P90 BN90LA4**	277
104	130	2.9	13.6	5250	**A302_13.6 S3 M3SA4**	284	**A302_13.6 P90 BN90LA4**	285
115	118	1.2	12.3	3040	**A102_12.3 S3 M3SA4**	276	**A102_12.3 P90 BN90LA4**	277
118	114	1.8	12.0	3420	**A202_12.0 S3 M3SA4**	280	**A202_12.0 P90 BN90LA4**	281
120	113	2.7	11.8	5060	**A302_11.8 S3 M3SA4**	284	**A302_11.8 P90 BN90LA4**	285
123	109	3.2	22.8	5040	**A302_22.8 S2 M2SB2**	284	**A302_22.8 P90 BN90SA2**	285
134	101	1.5	10.6	2990	**A102_10.6 S3 M3SA4**	276	**A102_10.6 P90 BN90LA4**	277
135	100	3.4	10.5	4930	**A302_10.5 S3 M3SA4**	284	**A302_10.5 P90 BN90LA4**	285
136	99	2.3	10.3	3330	**A202_10.3 S3 M3SA4**	280	**A202_10.3 P90 BN90LA4**	281
147	92	1.5	9.6	2940	**A102_9.6 S3 M3SA4**	276	**A102_9.6 P90 BN90LA4**	277
150	90	2.3	9.4	3250	**A202_9.4 S3 M3SA4**	280	**A202_9.4 P90 BN90LA4**	281
151	89	3.4	9.3	4770	**A302_9.3 S3 M3SA4**	284	**A302_9.3 P90 BN90LA4**	285
166	81	1.7	8.5	3420	**A102_8.5 S3 M3SA4**	276	**A102_8.5 P90 BN90LA4**	277
168	80	2.6	8.4	3180	**A202_8.4 S3 M3SA4**	280	**A202_8.4 P90 BN90LA4**	281
193	70	3.0	7.3	3080	**A202_7.3 S3 M3SA4**	280	**A202_7.3 P90 BN90LA4**	281
196	69	2.0	7.2	2790	**A102_7.2 S3 M3SA4**	276	**A102_7.2 P90 BN90LA4**	277
216	62	3.4	6.5	3000	**A202_6.5 S3 M3SA4**	280	**A202_6.5 P90 BN90LA4**	281
223	61	2.3	6.3	3220	**A102_6.3 S3 M3SA4**	276	**A102_6.3 P90 BN90LA4**	277

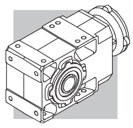

1.5 kW

n2 min-1	M2 Nm	S	i	Rn2 N	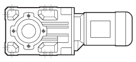		IEC	
258	52	2.7	5.5	2630	**A102_5.5 S3 M3SA4**	276	**A102_5.5 P90 BN90LA4**	277
291	46	3.0	9.6	2560	**A102_9.6 S2 M2SB2**	276	**A102_9.6 P90 BN90SA2**	277
329	41	3.4	8.5	2950	**A102_8.5 S2 M2SB2**	276	**A102_8.5 P90 BN90SA2**	277
388	35	2.4	7.2	1420	**A052_7.2 S2 M2SB2**	273		
442	30	2.6	6.3	1380	**A052_6.3 S2 M2SB2**	273		
512	26	2.9	5.5	1340	**A052_5.5 S2 M2SB2**	273		

2.2 kW

n2 min-1	M2 Nm	S	i	Rn2 N	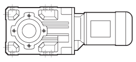		IEC	
1.2	16217	0.9	1222	75000	**A904_1222 S3 M3LA4**	314	**A904_1222 P100 BN100LA4**	315
1.3	14736	1.0	1111	75000	**A904_1111 S3 M3LA4**	314	**A904_1111 P100 BN100LA4**	315
1.4	13602	1.0	1025	75000	**A904_1025 S3 M3LA4**	314	**A904_1025 P100 BN100LA4**	315
1.5	12435	1.1	937.2	75000	**A904_937.2 S3 M3LA4**	314	**A904_937.2 P100 BN100LA4**	315
1.6	11479	1.2	865.1	75000	**A904_865.1 S3 M3LA4**	314	**A904_865.1 P100 BN100LA4**	315
1.8	10176	1.4	766.9	75000	**A904_766.9 S3 M3LA4**	314	**A904_766.9 P100 BN100LA4**	315
2.0	9393	1.5	707.9	75000	**A904_707.9 S3 M3LA4**	314	**A904_707.9 P100 BN100LA4**	315
2.0	9334	0.9	703.5	65000	**A804_703.5 S3 M3LA4**	311	**A804_703.5 P100 BN100LA4**	312
2.3	8056	1.0	607.2	65000	**A804_607.2 S3 M3LA4**	311	**A804_607.2 P100 BN100LA4**	312
2.3	7982	1.8	601.6	75000	**A904_601.6 S3 M3LA4**	314	**A904_601.6 P100 BN100LA4**	315
2.5	7436	1.1	560.5	65000	**A804_560.5 S3 M3LA4**	311	**A804_560.5 P100 BN100LA4**	312
2.5	7368	1.9	555.3	75000	**A904_555.3 S3 M3LA4**	314	**A904_555.3 P100 BN100LA4**	315
2.9	6456	2.2	486.6	75000	**A904_486.6 S3 M3LA4**	314	**A904_486.6 P100 BN100LA4**	315
2.9	6355	1.3	478.9	65000	**A804_478.9 S3 M3LA4**	311	**A804_478.9 P100 BN100LA4**	312
3.1	5960	2.3	449.2	75000	**A904_449.2 S3 M3LA4**	314	**A904_449.2 P100 BN100LA4**	315
3.2	5866	1.4	442.1	65000	**A804_442.1 S3 M3LA4**	311	**A804_442.1 P100 BN100LA4**	312
3.5	5310	0.9	400.2	50000	**A704_400.2 S3 M3LA4**	308	**A704_400.2 P100 BN100LA4**	309
3.7	5114	2.7	385.4	75000	**A904_385.4 S3 M3LA4**	314	**A904_385.4 P100 BN100LA4**	315
3.7	5088	1.6	383.5	65000	**A804_383.5 S3 M3LA4**	311	**A804_383.5 P100 BN100LA4**	312
3.8	4901	1.0	369.4	50000	**A704_369.4 S3 M3LA4**	308	**A704_369.4 P100 BN100LA4**	309
4.0	4721	3.0	355.8	75000	**A904_355.8 S3 M3LA4**	314	**A904_355.8 P100 BN100LA4**	315
4.0	4697	1.7	354.0	65000	**A804_354.0 S3 M3LA4**	311	**A804_354.0 P100 BN100LA4**	312
4.5	4198	1.2	316.4	50000	**A704_316.4 S3 M3LA4**	308	**A704_316.4 P100 BN100LA4**	309
4.6	4045	3.5	304.9	75000	**A904_304.9 S3 M3LA4**	314	**A904_304.9 P100 BN100LA4**	315
4.7	3986	2.0	300.4	65000	**A804_300.4 S3 M3LA4**	311	**A804_300.4 P100 BN100LA4**	312
4.8	3875	1.3	292.0	50000	**A704_292.0 S3 M3LA4**	308	**A704_292.0 P100 BN100LA4**	309
5.1	3679	2.2	277.3	65000	**A804_277.3 S3 M3LA4**	311	**A804_277.3 P100 BN100LA4**	312
5.9	3166	1.6	238.6	50000	**A704_238.6 S3 M3LA4**	308	**A704_238.6 P100 BN100LA4**	309
6.1	3087	2.6	232.6	65000	**A804_232.6 S3 M3LA4**	311	**A804_232.6 P100 BN100LA4**	312
6.2	3000	0.9	226.1	30000	**A604_226.1 S3 M3LA4**	304	**A604_226.1 P100 BN100LA4**	305
6.4	2922	1.7	220.3	50000	**A704_220.3 S3 M3LA4**	308	**A704_220.3 P100 BN100LA4**	309
6.6	2849	2.8	214.7	65000	**A804_214.7 S3 M3LA4**	311	**A804_214.7 P100 BN100LA4**	312
6.8	2770	1.0	208.7	30000	**A604_208.7 S3 M3LA4**	304	**A604_208.7 P100 BN100LA4**	305
7.6	2520	1.1	185.8	30000	**A603_185.8 S3 M3LA4**	304	**A603_185.8 P100 BN100LA4**	305
7.7	2440	2.0	183.9	50000	**A704_183.9 S3 M3LA4**	308	**A704_183.9 P100 BN100LA4**	309
8.2	2326	1.2	171.5	30000	**A603_171.5 S3 M3LA4**	304	**A603_171.5 P100 BN100LA4**	305
8.2	2273	3.5	171.3	65000	**A804_171.3 S3 M3LA4**	311	**A804_171.3 P100 BN100LA4**	312
8.3	2252	2.2	169.8	50000	**A704_169.8 S3 M3LA4**	308	**A704_169.8 P100 BN100LA4**	309

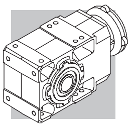

2.2 kW

n2 min-1	M2 Nm	S	i	Rn2 N	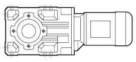			
8.8	2177	0.9	160.4	30000	**A553_160.4 S3 M3LA4**	300	**A553_160.4 P100 BN100LA4**	301
9.0	2117	1.3	156.0	30000	**A603_156.0 S3 M3LA4**	304	**A603_156.0 P100 BN100LA4**	305
9.2	2085	1.9	153.7	50000	**A703_153.7 S3 M3LA4**	308	**A703_153.7 P100 BN100LA4**	309
9.6	1992	1.0	146.8	30000	**A553_146.8 S3 M3LA4**	300	**A553_146.8 P100 BN100LA4**	301
9.8	1954	1.4	144.0	30000	**A603_144.0 S3 M3LA4**	304	**A603_144.0 P100 BN100LA4**	305
9.9	1925	2.6	141.9	50000	**A703_141.9 S3 M3LA4**	308	**A703_141.9 P100 BN100LA4**	309
10.6	1808	1.5	133.3	30000	**A603_133.3 S3 M3LA4**	304	**A603_133.3 P100 BN100LA4**	305
10.6	1801	1.1	132.7	30000	**A553_132.7 S3 M3LA4**	300	**A553_132.7 P100 BN100LA4**	301
10.8	1773	2.8	130.7	50000	**A703_130.7 S3 M3LA4**	308	**A703_130.7 P100 BN100LA4**	309
11.4	1681	1.2	123.9	30000	**A553_123.9 S3 M3LA4**	300	**A553_123.9 P100 BN100LA4**	301
11.5	1669	1.7	123.0	30000	**A603_123.0 S3 M3LA4**	304	**A603_123.0 P100 BN100LA4**	305
11.7	1636	3.1	120.6	50000	**A703_120.6 S3 M3LA4**	308	**A703_120.6 P100 BN100LA4**	309
12.0	1600	0.9	118.0	20000	**A503_118.0 S3 M3LA4**	296	**A503_118.0 P100 BN100LA4**	297
12.9	1485	1.0	109.4	20000	**A503_109.4 S3 M3LA4**	296	**A503_109.4 P100 BN100LA4**	297
13.1	1463	1.9	107.8	30000	**A603_107.8 S3 M3LA4**	304	**A603_107.8 P100 BN100LA4**	305
13.5	1414	3.5	104.2	50000	**A703_104.2 S3 M3LA4**	308	**A703_104.2 P100 BN100LA4**	309
13.9	1375	1.5	101.4	30000	**A553_101.4 S3 M3LA4**	300	**A553_101.4 P100 BN100LA4**	301
14.2	1350	1.1	99.5	20000	**A503_99.5 S3 M3LA4**	296	**A503_99.5 P100 BN100LA4**	297
14.2	1350	2.1	99.5	30000	**A603_99.5 S3 M3LA4**	304	**A603_99.5 P100 BN100LA4**	305
15.7	1215	1.2	89.5	19800	**A503_89.5 S3 M3LA4**	296	**A503_89.5 P100 BN100LA4**	297
16.3	1172	2.4	86.4	30000	**A603_86.4 S3 M3LA4**	304	**A603_86.4 P100 BN100LA4**	305
17.3	1105	1.4	81.5	19600	**A503_81.5 S3 M3LA4**	296	**A503_81.5 P100 BN100LA4**	297
17.7	1082	2.6	79.7	30000	**A603_79.7 S3 M3LA4**	304	**A603_79.7 P100 BN100LA4**	305
17.7	1079	1.9	79.5	30000	**A553_79.5 S3 M3LA4**	300	**A553_79.5 P100 BN100LA4**	301
20.0	955	2.9	70.4	30000	**A603_70.4 S3 M3LA4**	304	**A603_70.4 P100 BN100LA4**	305
20.1	953	1.6	70.2	19300	**A503_70.2 S3 M3LA4**	296	**A503_70.2 P100 BN100LA4**	297
21.7	882	3.2	65.0	30000	**A603_65.0 S3 M3LA4**	304	**A603_65.0 P100 BN100LA4**	305
21.9	873	2.3	64.3	30000	**A553_64.3 S3 M3LA4**	300	**A553_64.3 P100 BN100LA4**	301
22.0	899	0.9	64.2	14500	**A412_64.2 S3 M3LA4**	292	**A412_64.2 P100 BN100LA4**	293
22.1	867	1.7	63.9	19000	**A503_63.9 S3 M3LA4**	296	**A503_63.9 P100 BN100LA4**	297
24.0	824	1.0	58.8	14400	**A412_58.8 S3 M3LA4**	292	**A412_58.8 P100 BN100LA4**	293
24.8	771	1.9	56.8	18600	**A503_56.8 S3 M3LA4**	296	**A503_56.8 P100 BN100LA4**	297
26.5	745	1.1	53.1	14100	**A412_53.1 S3 M3LA4**	292	**A412_53.1 P100 BN100LA4**	293
27.3	701	2.1	51.7	18300	**A503_51.7 S3 M3LA4**	296	**A503_51.7 P100 BN100LA4**	297
27.7	691	2.9	51.0	30000	**A553_51.0 S3 M3LA4**	300	**A553_51.0 P100 BN100LA4**	301
28.7	688	0.9	49.1	9900	**A352_49.1 S3 M3LA4**	288	**A352_49.1 P100 BN100LA4**	289
29.2	677	1.3	48.3	13900	**A412_48.3 S3 M3LA4**	292	**A412_48.3 P100 BN100LA4**	293
31	642	0.9	45.8	9840	**A352_45.8 S3 M3LA4**	288	**A352_45.8 P100 BN100LA4**	289
31	632	1.3	45.1	13700	**A412_45.1 S3 M3LA4**	292	**A412_45.1 P100 BN100LA4**	293
31	611	2.5	45.0	17900	**A503_45.0 S3 M3LA4**	296	**A503_45.0 P100 BN100LA4**	297
34	586	1.0	41.8	9750	**A352_41.8 S3 M3LA4**	288	**A352_41.8 P100 BN100LA4**	289
34	555	2.7	40.9	17500	**A503_40.9 S3 M3LA4**	296	**A503_40.9 P100 BN100LA4**	297
38	513	1.2	36.6	9600	**A352_36.6 S3 M3LA4**	288	**A352_36.6 P100 BN100LA4**	289
39	503	1.6	35.9	13100	**A412_35.9 S3 M3LA4**	292	**A412_35.9 P100 BN100LA4**	293
40	483	3.1	35.6	17000	**A503_35.6 S3 M3LA4**	296	**A503_35.6 P100 BN100LA4**	297
43	465	1.3	33.2	9460	**A352_33.2 S3 M3LA4**	288	**A352_33.2 P100 BN100LA4**	289
44	439	3.4	32.4	16600	**A503_32.4 S3 M3LA4**	296	**A503_32.4 P100 BN100LA4**	297
48	411	1.0	29.3	5380	**A302_29.3 S3 M3LA4**	284	**A302_29.3 P100 BN100LA4**	285
50	399	1.5	28.4	9230	**A352_28.4 S3 M3LA4**	288	**A352_28.4 P100 BN100LA4**	289
50	397	1.8	28.3	12400	**A412_28.3 S3 M3LA4**	292	**A412_28.3 P100 BN100LA4**	293
53	372	1.1	26.5	5350	**A302_26.5 S3 M3LA4**	284	**A302_26.5 P100 BN100LA4**	285

2.2 kW

n_2 min^{-1}	M_2 Nm	S	i	R_{n2} N	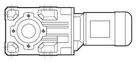		IEC	
55	360	1.7	25.7	9070	**A352_25.7 S3 M3LA4**	288	**A352_25.7 P100 BN100LA4**	289
62	319	1.3	22.8	5290	**A302_22.8 S3 M3LA4**	284	**A302_22.8 P100 BN100LA4**	285
62	318	2.1	22.7	11700	**A412_22.7 S3 M3LA4**	292	**A412_22.7 P100 BN100LA4**	293
63	315	1.9	22.5	8840	**A352_22.5 S3 M3LA4**	288	**A352_22.5 P100 BN100LA4**	289
69	288	1.4	20.5	5230	**A302_20.5 S3 M3LA4**	284	**A302_20.5 P100 BN100LA4**	285
69	286	2.1	20.4	8660	**A352_20.4 S3 M3LA4**	288	**A352_20.4 P100 BN100LA4**	289
78	254	1.0	18.1	3140	**A202_18.1 S3 M3LA4**	280	**A202_18.1 P100 BN100LA4**	281
78	252	1.6	18.0	5140	**A302_18.0 S3 M3LA4**	284	**A302_18.0 P100 BN100LA4**	285
79	249	2.5	17.8	11000	**A412_17.8 S3 M3LA4**	292	**A412_17.8 P100 BN100LA4**	293
83	238	2.5	17.0	8320	**A352_17.0 S3 M3LA4**	288	**A352_17.0 P100 BN100LA4**	289
86	229	1.7	16.3	5060	**A302_16.3 S3 M3LA4**	284	**A302_16.3 P100 BN100LA4**	285
87	227	1.1	16.2	3140	**A202_16.2 S3 M3LA4**	280	**A202_16.2 P100 BN100LA4**	281
88	226	2.7	16.1	10800	**A412_16.1 S3 M3LA4**	292	**A412_16.1 P100 BN100LA4**	293
91	217	2.8	15.5	8150	**A352_15.5 S3 M3LA4**	288	**A352_15.5 P100 BN100LA4**	289
100	197	1.2	14.1	3120	**A202_14.1 S3 M3LA4**	280	**A202_14.1 P100 BN100LA4**	281
102	193	3.0	13.8	10300	**A412_13.8 S3 M3LA4**	292	**A412_13.8 P100 BN100LA4**	293
104	190	1.9	13.6	4900	**A302_13.6 S3 M3LA4**	284	**A302_13.6 P100 BN100LA4**	285
108	183	3.3	13.1	7820	**A352_13.1 S3 M3LA4**	288	**A352_13.1 P100 BN100LA4**	289
118	168	1.3	12.0	3070	**A202_12.0 S3 M3LA4**	280	**A202_12.0 P100 BN100LA4**	281
120	165	1.8	11.8	4750	**A302_11.8 S3 M3LA4**	284	**A302_11.8 P100 BN100LA4**	285
120	165	2.4	11.8	7710	**A352_11.8 S3 M3LA4**	288	**A352_11.8 P100 BN100LA4**	289
120	165	3.3	11.7	9870	**A412_11.7 S3 M3LA4**	292	**A412_11.7 P100 BN100LA4**	293
123	160	2.0	23.1	3070	**A202_23.1 S3 M3SA2**	280	**A202_23.1 P90 BN90L2**	281
133	149	2.7	10.6	7510	**A352_10.6 S3 M3LA4**	288	**A352_10.6 P100 BN100LA4**	289
134	148	1.0	10.6	2600	**A102_10.6 S3 M3LA4**	276	**A102_10.6 P100 BN100LA4**	277
135	147	2.3	10.5	4660	**A302_10.5 S3 M3LA4**	284	**A302_10.5 P100 BN100LA4**	285
136	145	1.6	10.3	3030	**A202_10.3 S3 M3LA4**	280	**A202_10.3 P100 BN100LA4**	281
147	135	1.0	9.6	2580	**A102_9.6 S3 M3LA4**	276	**A102_9.6 P100 BN100LA4**	277
150	131	1.6	9.4	2980	**A202_9.4 S3 M3LA4**	280	**A202_9.4 P100 BN100LA4**	281
151	130	2.3	9.3	4530	**A302_9.3 S3 M3LA4**	284	**A302_9.3 P100 BN100LA4**	285
151	130	3.1	9.3	7240	**A352_9.3 S3 M3LA4**	288	**A352_9.3 P100 BN100LA4**	289
166	119	1.2	8.5	3050	**A102_8.5 S3 M3LA4**	276	**A102_8.5 P100 BN100LA4**	277
167	119	2.5	8.5	4430	**A302_8.5 S3 M3LA4**	284	**A302_8.5 P100 BN100LA4**	285
167	119	3.2	8.5	7060	**A352_8.5 S3 M3LA4**	288	**A352_8.5 P100 BN100LA4**	289
168	117	1.8	8.4	2930	**A202_8.4 S3 M3LA4**	280	**A202_8.4 P100 BN100LA4**	281
193	102	2.1	7.3	2860	**A202_7.3 S3 M3LA4**	280	**A202_7.3 P100 BN100LA4**	281
196	101	1.4	7.2	2520	**A102_7.2 S3 M3LA4**	276	**A102_7.2 P100 BN100LA4**	277
201	98	3.0	7.0	4240	**A302_7.0 S3 M3LA4**	284	**A302_7.0 P100 BN100LA4**	285
216	92	2.3	6.5	2810	**A202_6.5 S3 M3LA4**	280	**A202_6.5 P100 BN100LA4**	281
220	90	3.3	6.4	4150	**A302_6.4 S3 M3LA4**	284	**A302_6.4 P100 BN100LA4**	285
223	89	1.6	6.3	2950	**A102_6.3 S3 M3LA4**	276	**A102_6.3 P100 BN100LA4**	277
258	77	1.8	5.5	2430	**A102_5.5 S3 M3LA4**	276	**A102_5.5 P100 BN100LA4**	277
263	75	2.8	5.4	2700	**A202_5.4 S3 M3LA4**	280	**A202_5.4 P100 BN100LA4**	281
304	65	3.2	9.4	2620	**A202_9.4 S3 M3SA2**	280	**A202_9.4 P90 BN90L2**	281

3.0 kW

n2 min-1	M2 Nm	S	i	Rn2 N	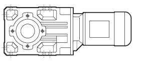			
1.6	15653	0.9	865.1	75000	**A904_865.1 S3 M3LB4**	314	**A904_865.1 P100 BN100LB4**	315
1.8	13876	1.0	766.9	75000	**A904_766.9 S3 M3LB4**	314	**A904_766.9 P100 BN100LB4**	315
2.0	12809	1.1	707.9	75000	**A904_707.9 S3 M3LB4**	314	**A904_707.9 P100 BN100LB4**	315
2.3	10885	1.3	601.6	75000	**A904_601.6 S3 M3LB4**	314	**A904_601.6 P100 BN100LB4**	315
2.5	10047	1.4	555.3	75000	**A904_555.3 S3 M3LB4**	314	**A904_555.3 P100 BN100LB4**	315
2.9	8804	1.6	486.6	75000	**A904_486.6 S3 M3LB4**	314	**A904_486.6 P100 BN100LB4**	315
2.9	8665	0.9	478.9	65000	**A804_478.9 S3 M3LB4**	311	**A804_478.9 P100 BN100LB4**	312
3.1	8127	1.7	449.2	75000	**A904_449.2 S3 M3LB4**	314	**A904_449.2 P100 BN100LB4**	315
3.2	7999	1.0	442.1	65000	**A804_442.1 S3 M3LB4**	311	**A804_442.1 P100 BN100LB4**	312
3.7	6974	2.0	385.4	75000	**A904_385.4 S3 M3LB4**	314	**A904_385.4 P100 BN100LB4**	315
3.7	6938	1.2	383.5	65000	**A804_383.5 S3 M3LB4**	311	**A804_383.5 P100 BN100LB4**	312
4.0	6438	2.2	355.8	75000	**A904_355.8 S3 M3LB4**	314	**A904_355.8 P100 BN100LB4**	315
4.0	6405	1.2	354.0	65000	**A804_354.0 S3 M3LB4**	311	**A804_354.0 P100 BN100LB4**	312
4.5	5724	0.9	316.4	50000	**A704_316.4 S3 M3LB4**	308	**A704_316.4 P100 BN100LB4**	309
4.6	5517	2.5	304.9	75000	**A904_304.9 S3 M3LB4**	314	**A904_304.9 P100 BN100LB4**	315
4.7	5435	1.5	300.4	65000	**A804_300.4 S3 M3LB4**	311	**A804_300.4 P100 BN100LB4**	312
4.8	5284	0.9	292.0	50000	**A704_292.0 S3 M3LB4**	308	**A704_292.0 P100 BN100LB4**	309
5.0	5092	2.7	281.4	75000	**A904_281.4 S3 M3LB4**	314	**A904_281.4 P100 BN100LB4**	315
5.1	5017	1.6	277.3	65000	**A804_277.3 S3 M3LB4**	311	**A804_277.3 P100 BN100LB4**	312
5.9	4317	1.2	238.6	50000	**A704_238.6 S3 M3LB4**	308	**A704_238.6 P100 BN100LB4**	309
6.1	4209	1.9	232.6	65000	**A804_232.6 S3 M3LB4**	311	**A804_232.6 P100 BN100LB4**	312
6.2	4097	3.4	226.4	75000	**A904_226.4 S3 M3LB4**	314	**A904_226.4 P100 BN100LB4**	315
6.4	3985	1.3	220.3	50000	**A704_220.3 S3 M3LB4**	308	**A704_220.3 P100 BN100LB4**	309
6.6	3885	2.1	214.7	65000	**A804_214.7 S3 M3LB4**	311	**A804_214.7 P100 BN100LB4**	312
7.7	3327	1.5	183.9	50000	**A704_183.9 S3 M3LB4**	308	**A704_183.9 P100 BN100LB4**	309
8.2	3172	0.9	171.5	30000	**A603_171.5 S3 M3LB4**	304	**A603_171.5 P100 BN100LB4**	305
8.2	3099	2.6	171.3	65000	**A804_171.3 S3 M3LB4**	311	**A804_171.3 P100 BN100LB4**	312
8.3	3071	1.6	169.8	50000	**A704_169.8 S3 M3LB4**	308	**A704_169.8 P100 BN100LB4**	309
9.0	2901	2.8	156.8	65000	**A803_156.8 S3 M3LB4**	311	**A803_156.8 P100 BN100LB4**	312
9.0	2887	1.0	156.0	30000	**A603_156.0 S3 M3LB4**	304	**A603_156.0 P100 BN100LB4**	305
9.2	2843	1.4	153.7	50000	**A703_153.7 S3 M3LB4**	308	**A703_153.7 P100 BN100LB4**	309
9.7	2678	3.0	144.7	65000	**A803_144.7 S3 M3LB4**	311	**A803_144.7 P100 BN100LB4**	312
9.8	2665	1.1	144.0	30000	**A603_144.0 S3 M3LB4**	304	**A603_144.0 P100 BN100LB4**	305
9.9	2624	1.9	141.9	50000	**A703_141.9 S3 M3LB4**	308	**A703_141.9 P100 BN100LB4**	309
10.6	2466	1.1	133.3	30000	**A603_133.3 S3 M3LB4**	304	**A603_133.3 P100 BN100LB4**	305
10.8	2417	2.1	130.7	50000	**A703_130.7 S3 M3LB4**	308	**A703_130.7 P100 BN100LB4**	309
11.2	2324	3.4	125.6	65000	**A803_125.6 S3 M3LB4**	311	**A803_125.6 P100 BN100LB4**	312
11.5	2276	1.2	123.0	30000	**A603_123.0 S3 M3LB4**	304	**A603_123.0 P100 BN100LB4**	305
11.7	2231	2.2	120.6	50000	**A703_120.6 S3 M3LB4**	308	**A703_120.6 P100 BN100LB4**	309
13.1	1994	1.4	107.8	30000	**A603_107.8 S3 M3LB4**	304	**A603_107.8 P100 BN100LB4**	305
13.5	1928	2.6	104.2	50000	**A703_104.2 S3 M3LB4**	308	**A703_104.2 P100 BN100LB4**	309
13.9	1876	1.1	101.4	30000	**A553_101.4 S3 M3LB4**	300	**A553_101.4 P100 BN100LB4**	301
14.2	1841	1.5	99.5	30000	**A603_99.5 S3 M3LB4**	304	**A603_99.5 P100 BN100LB4**	305
14.7	1780	2.8	96.2	50000	**A703_96.2 S3 M3LB4**	308	**A703_96.2 P100 BN100LB4**	309
15.7	1657	0.9	89.5	17100	**A503_89.5 S3 M3LB4**	296	**A503_89.5 P100 BN100LB4**	297
16.3	1598	1.8	86.4	30000	**A603_86.4 S3 M3LB4**	304	**A603_86.4 P100 BN100LB4**	305
16.4	1590	3.1	85.9	50000	**A703_85.9 S3 M3LB4**	308	**A703_85.9 P100 BN100LB4**	309
17.3	1507	1.0	81.5	17200	**A503_81.5 S3 M3LB4**	296	**A503_81.5 P100 BN100LB4**	297
17.7	1475	1.9	79.7	30000	**A603_79.7 S3 M3LB4**	304	**A603_79.7 P100 BN100LB4**	305
17.7	1471	1.4	79.5	30000	**A553_79.5 S3 M3LB4**	300	**A553_79.5 P100 BN100LB4**	301
17.8	1468	3.4	79.3	50000	**A703_79.3 S3 M3LB4**	308	**A703_79.3 P100 BN100LB4**	309

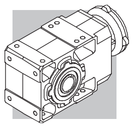

3.0 kW

n_2 min-1	M_2 Nm	S	i	R_{n2} N	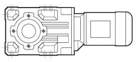			
20.0	1303	2.1	70.4	30000	**A603_70.4 S3 M3LB4**	304	**A603_70.4 P100 BN100LB4**	305
20.1	1299	1.2	70.2	17200	**A503_70.2 S3 M3LB4**	296	**A503_70.2 P100 BN100LB4**	297
21.7	1202	2.3	65.0	30000	**A603_65.0 S3 M3LB4**	304	**A603_65.0 P100 BN100LB4**	305
21.9	1190	1.7	64.3	30000	**A553_64.3 S3 M3LB4**	300	**A553_64.3 P100 BN100LB4**	301
22.1	1182	1.3	63.9	17100	**A503_63.9 S3 M3LB4**	296	**A503_63.9 P100 BN100LB4**	297
24.8	1051	1.4	56.8	17000	**A503_56.8 S3 M3LB4**	296	**A503_56.8 P100 BN100LB4**	297
25.4	1029	2.7	55.6	30000	**A603_55.6 S3 M3LB4**	304	**A603_55.6 P100 BN100LB4**	305
27.3	956	1.6	51.7	16800	**A503_51.7 S3 M3LB4**	296	**A503_51.7 P100 BN100LB4**	297
27.5	950	2.9	51.3	30000	**A603_51.3 S3 M3LB4**	304	**A603_51.3 P100 BN100LB4**	305
27.7	943	2.1	51.0	30000	**A553_51.0 S3 M3LB4**	300	**A553_51.0 P100 BN100LB4**	301
29.2	923	0.9	48.3	12700	**A412_48.3 S3 M3LB4**	292	**A412_48.3 P100 BN100LB4**	293
31	861	1.0	45.1	12600	**A412_45.1 S3 M3LB4**	292	**A412_45.1 P100 BN100LB4**	293
31	836	3.3	45.2	30000	**A603_45.2 S3 M3LB4**	304	**A603_45.2 P100 BN100LB4**	305
31	833	1.8	45.0	16500	**A503_45.0 S3 M3LB4**	296	**A503_45.0 P100 BN100LB4**	297
34	757	2.0	40.9	16300	**A503_40.9 S3 M3LB4**	296	**A503_40.9 P100 BN100LB4**	297
35	746	2.7	40.3	30000	**A553_40.3 S3 M3LB4**	300	**A553_40.3 P100 BN100LB4**	301
38	700	0.9	36.6	8550	**A352_36.6 S3 M3LB4**	288	**A352_36.6 P100 BN100LB4**	289
39	686	1.1	35.9	12200	**A412_35.9 S3 M3LB4**	292	**A412_35.9 P100 BN100LB4**	293
40	659	2.3	35.6	16000	**A503_35.6 S3 M3LB4**	296	**A503_35.6 P100 BN100LB4**	297
43	634	0.9	33.2	8520	**A352_33.2 S3 M3LB4**	288	**A352_33.2 P100 BN100LB4**	289
44	599	2.5	32.4	15700	**A503_32.4 S3 M3LB4**	296	**A503_32.4 P100 BN100LB4**	297
50	543	1.1	28.4	8420	**A352_28.4 S3 M3LB4**	288	**A352_28.4 P100 BN100LB4**	289
50	541	1.3	28.3	11700	**A412_28.3 S3 M3LB4**	292	**A412_28.3 P100 BN100LB4**	293
53	489	3.1	26.4	15100	**A503_26.4 S3 M3LB4**	296	**A503_26.4 P100 BN100LB4**	297
55	491	1.2	25.7	8330	**A352_25.7 S3 M3LB4**	288	**A352_25.7 P100 BN100LB4**	289
59	445	3.4	24.0	14800	**A503_24.0 S3 M3LB4**	296	**A503_24.0 P100 BN100LB4**	297
62	435	0.9	22.8	4610	**A302_22.8 S3 M3LB4**	284	**A302_22.8 P100 BN100LB4**	285
62	433	1.6	22.7	11200	**A412_22.7 S3 M3LB4**	292	**A412_22.7 P100 BN100LB4**	293
63	430	1.4	22.5	8190	**A352_22.5 S3 M3LB4**	288	**A352_22.5 P100 BN100LB4**	289
67	400	3.0	20.9	15500	**A502_20.9 S3 M3LB4**	296	**A502_20.9 P100 BN100LB4**	297
69	392	1.0	20.5	4620	**A302_20.5 S3 M3LB4**	284	**A302_20.5 P100 BN100LB4**	285
69	390	1.5	20.4	8080	**A352_20.4 S3 M3LB4**	288	**A352_20.4 P100 BN100LB4**	289
78	344	1.2	18.0	4600	**A302_18.0 S3 M3LB4**	284	**A302_18.0 P100 BN100LB4**	285
79	339	1.9	17.8	10600	**A412_17.8 S3 M3LB4**	292	**A412_17.8 P100 BN100LB4**	293
83	324	1.9	17.0	7830	**A352_17.0 S3 M3LB4**	288	**A352_17.0 P100 BN100LB4**	289
86	312	1.2	16.3	4580	**A302_16.3 S3 M3LB4**	284	**A302_16.3 P100 BN100LB4**	285
88	308	2.0	16.1	10400	**A412_16.1 S3 M3LB4**	292	**A412_16.1 P100 BN100LB4**	293
91	296	2.0	15.5	7700	**A352_15.5 S3 M3LB4**	288	**A352_15.5 P100 BN100LB4**	289
100	269	0.9	14.1	2650	**A202_14.1 S3 M3LB4**	280	**A202_14.1 P100 BN100LB4**	281
102	263	2.2	13.8	9990	**A412_13.8 S3 M3LB4**	292	**A412_13.8 P100 BN100LB4**	293
104	259	1.4	13.6	4500	**A302_13.6 S3 M3LB4**	284	**A302_13.6 P100 BN100LB4**	285
108	250	2.4	13.1	7450	**A352_13.1 S3 M3LB4**	288	**A352_13.1 P100 BN100LB4**	289
118	229	0.9	12.0	2670	**A202_12.0 S3 M3LB4**	280	**A202_12.0 P100 BN100LB4**	281
120	225	1.3	11.8	4400	**A302_11.8 S3 M3LB4**	284	**A302_11.8 P100 BN100LB4**	285
120	225	1.8	11.8	7410	**A352_11.8 S3 M3LB4**	288	**A352_11.8 P100 BN100LB4**	289
120	224	2.5	11.7	9580	**A412_11.7 S3 M3LB4**	292	**A412_11.7 P100 BN100LB4**	293
124	218	1.5	23.1	2690	**A202_23.1 S3 M3LA2**	280	**A202_23.1 P100 BN100L2**	281
133	203	2.0	10.6	7230	**A352_10.6 S3 M3LB4**	288	**A352_10.6 P100 BN100LB4**	289
135	200	1.7	10.5	4350	**A302_10.5 S3 M3LB4**	284	**A302_10.5 P100 BN100LB4**	285
136	198	1.1	10.3	2690	**A202_10.3 S3 M3LB4**	280	**A202_10.3 P100 BN100LB4**	281
139	194	2.8	10.1	9230	**A412_10.1 S3 M3LB4**	292	**A412_10.1 P100 BN100LB4**	293

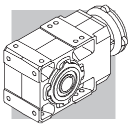

3.0 kW

n_2 min^{-1}	M_2 Nm	S	i	R_{n2} N			IEC	
150	179	1.2	9.4	2670	**A202_9.4 S3 M3LB4**	280	**A202_9.4 P100 BN100LB4**	281
151	178	1.7	9.3	4240	**A302_9.3 S3 M3LB4**	284	**A302_9.3 P100 BN100LB4**	285
151	178	2.2	9.3	7000	**A352_9.3 S3 M3LB4**	288	**A352_9.3 P100 BN100LB4**	289
153	176	3.1	9.2	8980	**A412_9.2 S3 M3LB4**	292	**A412_9.2 P100 BN100LB4**	293
167	162	1.9	8.5	4170	**A302_8.5 S3 M3LB4**	284	**A302_8.5 P100 BN100LB4**	285
167	162	2.4	8.5	6840	**A352_8.5 S3 M3LB4**	288	**A352_8.5 P100 BN100LB4**	289
168	160	1.3	8.4	2650	**A202_8.4 S3 M3LB4**	280	**A202_8.4 P100 BN100LB4**	281
169	159	3.5	8.3	8740	**A412_8.3 S3 M3LB4**	292	**A412_8.3 P100 BN100LB4**	293
193	139	1.5	7.3	2620	**A202_7.3 S3 M3LB4**	280	**A202_7.3 P100 BN100LB4**	281
196	138	1.0	7.2	2220	**A102_7.2 S3 M3LB4**	276	**A102_7.2 P100 BN100LB4**	277
201	134	2.2	7.0	4030	**A302_7.0 S3 M3LB4**	284	**A302_7.0 P100 BN100LB4**	285
201	134	2.8	7.0	6520	**A352_7.0 S3 M3LB4**	288	**A352_7.0 P100 BN100LB4**	289
216	125	1.7	6.5	2590	**A202_6.5 S3 M3LB4**	280	**A202_6.5 P100 BN100LB4**	281
220	123	2.4	6.4	3950	**A302_6.4 S3 M3LB4**	284	**A302_6.4 P100 BN100LB4**	285
220	123	2.9	6.4	6360	**A352_6.4 S3 M3LB4**	288	**A352_6.4 P100 BN100LB4**	289
223	121	1.2	6.3	2640	**A102_6.3 S3 M3LB4**	276	**A102_6.3 P100 BN100LB4**	277
243	111	2.7	11.8	3870	**A302_11.8 S3 M3LA2**	284	**A302_11.8 P100 BN100L2**	285
258	104	1.3	5.5	2200	**A102_5.5 S3 M3LB4**	276	**A102_5.5 P100 BN100LB4**	277
260	103	2.9	5.4	3810	**A302_5.4 S3 M3LB4**	284	**A302_5.4 P100 BN100LB4**	285
260	103	3.3	5.4	6070	**A352_5.4 S3 M3LB4**	288	**A352_5.4 P100 BN100LB4**	289
263	102	2.1	5.4	2520	**A202_5.4 S3 M3LB4**	280	**A202_5.4 P100 BN100LB4**	281
277	97	1.9	10.3	2500	**A202_10.3 S3 M3LA2**	280	**A202_10.3 P100 BN100L2**	281
307	88	3.4	9.3	3670	**A302_9.3 S3 M3LA2**	284	**A302_9.3 P100 BN100L2**	285
342	79	2.7	8.4	2410	**A202_8.4 S3 M3LA2**	280	**A202_8.4 P100 BN100L2**	281
397	68	2.1	7.2	2090	**A102_7.2 S3 M3LA2**	276	**A102_7.2 P100 BN100L2**	277
451	60	2.3	6.3	2430	**A102_6.3 S3 M3LA2**	276	**A102_6.3 P100 BN100L2**	277
523	51	2.6	5.5	1990	**A102_5.5 S3 M3LA2**	276	**A102_5.5 P100 BN100L2**	277

4.0 kW

n_2 min^{-1}	M_2 Nm	S	i	R_{n2} N			IEC	
2.3	14616	1.0	601.6	75000	**A904_601.6 S3 M3LC4**	314	**A904_601.6 P112 BN112M4**	315
2.5	13492	1.0	555.3	75000	**A904_555.3 S3 M3LC4**	314	**A904_555.3 P112 BN112M4**	315
2.9	11823	1.2	486.6	75000	**A904_486.6 S3 M3LC4**	314	**A904_486.6 P112 BN112M4**	315
3.1	10913	1.3	449.2	75000	**A904_449.2 S3 M3LC4**	314	**A904_449.2 P112 BN112M4**	315
3.6	9365	1.5	385.4	75000	**A904_385.4 S3 M3LC4**	314	**A904_385.4 P112 BN112M4**	315
3.7	9317	0.9	383.5	65000	**A804_383.5 S3 M3LC4**	311	**A804_383.5 P112 BN112M4**	312
3.9	8645	1.6	355.8	75000	**A904_355.8 S3 M3LC4**	314	**A904_355.8 P112 BN112M4**	315
4.0	8600	0.9	354.0	65000	**A804_354.0 S3 M3LC4**	311	**A804_354.0 P112 BN112M4**	312
4.6	7408	1.9	304.9	75000	**A904_304.9 S3 M3LC4**	314	**A904_304.9 P112 BN112M4**	315
4.7	7299	1.1	300.4	65000	**A804_300.4 S3 M3LC4**	311	**A804_300.4 P112 BN112M4**	312
5.0	6838	2.0	281.4	75000	**A904_281.4 S3 M3LC4**	314	**A904_281.4 P112 BN112M4**	315
5.0	6737	1.2	277.3	65000	**A804_277.3 S3 M3LC4**	311	**A804_277.3 P112 BN112M4**	312
5.9	5797	0.9	238.6	50000	**A704_238.6 S3 M3LC4**	308	**A704_238.6 P112 BN112M4**	309
6.0	5652	1.4	232.6	65000	**A804_232.6 S3 M3LC4**	311	**A804_232.6 P112 BN112M4**	312
6.2	5502	2.5	226.4	75000	**A904_226.4 S3 M3LC4**	314	**A904_226.4 P112 BN112M4**	315
6.4	5352	0.9	220.3	50000	**A704_220.3 S3 M3LC4**	308	**A704_220.3 P112 BN112M4**	309
6.5	5217	1.5	214.7	65000	**A804_214.7 S3 M3LC4**	311	**A804_214.7 P112 BN112M4**	312

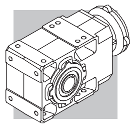

4.0 kW

n2 min-1	M2 Nm	S	i	Rn2 N			IEC	
6.7	5078	2.8	209.0	75000	**A904_209.0 S3 M3LC4**	314	**A904_209.0 P112 BN112M4**	315
7.6	4468	1.1	183.9	50000	**A704_183.9 S3 M3LC4**	308	**A704_183.9 P112 BN112M4**	309
7.8	4373	3.2	180.0	75000	**A904_180.0 S3 M3LC4**	314	**A904_180.0 P112 BN112M4**	315
8.2	4162	1.9	171.3	65000	**A804_171.3 S3 M3LC4**	311	**A804_171.3 P112 BN112M4**	312
8.2	4125	1.2	169.8	50000	**A704_169.8 S3 M3LC4**	308	**A704_169.8 P112 BN112M4**	309
8.4	4036	3.5	166.1	75000	**A904_166.1 S3 M3LC4**	314	**A904_166.1 P112 BN112M4**	315
8.9	3895	2.1	156.8	65000	**A803_156.8 S3 M3LC4**	311	**A803_156.8 P112 BN112M4**	312
9.1	3818	1.1	153.7	50000	**A703_153.7 S3 M3LC4**	308	**A703_153.7 P112 BN112M4**	309
9.7	3596	2.2	144.7	65000	**A803_144.7 S3 M3LC4**	311	**A803_144.7 P112 BN112M4**	312
9.9	3524	1.4	141.9	50000	**A703_141.9 S3 M3LC4**	308	**A703_141.9 P112 BN112M4**	309
10.7	3246	1.5	130.7	50000	**A703_130.7 S3 M3LC4**	308	**A703_130.7 P112 BN112M4**	309
11.1	3121	2.6	125.6	65000	**A803_125.6 S3 M3LC4**	311	**A803_125.6 P112 BN112M4**	312
11.4	3056	0.9	123.0	30000	**A603_123.0 S3 M3LC4**	304	**A603_123.0 P112 BN112M4**	305
11.6	2996	1.7	120.6	50000	**A703_120.6 S3 M3LC4**	308	**A703_120.6 P112 BN112M4**	309
12.1	2881	2.8	116.0	65000	**A803_116.0 S3 M3LC4**	311	**A803_116.0 P112 BN112M4**	312
13.0	2678	1.0	107.8	30000	**A603_107.8 S3 M3LC4**	304	**A603_107.8 P112 BN112M4**	305
13.4	2590	1.9	104.2	50000	**A703_104.2 S3 M3LC4**	308	**A703_104.2 P112 BN112M4**	309
13.5	2584	3.1	104.0	65000	**A803_104.0 S3 M3LC4**	311	**A803_104.0 P112 BN112M4**	312
14.1	2472	1.1	99.5	30000	**A603_99.5 S3 M3LC4**	304	**A603_99.5 P112 BN112M4**	305
14.6	2390	2.1	96.2	50000	**A703_96.2 S3 M3LC4**	308	**A703_96.2 P112 BN112M4**	309
14.6	2386	3.4	96.0	65000	**A803_96.0 S3 M3LC4**	311	**A803_96.0 P112 BN112M4**	312
16.2	2146	1.3	86.4	30000	**A603_86.4 S3 M3LC4**	304	**A603_86.4 P112 BN112M4**	305
16.3	2135	2.3	85.9	50000	**A703_85.9 S3 M3LC4**	308	**A703_85.9 P112 BN112M4**	309
17.6	1980	1.4	79.7	30000	**A603_79.7 S3 M3LC4**	304	**A603_79.7 P112 BN112M4**	305
17.6	1976	1.0	79.5	30000	**A553_79.5 S3 M3LC4**	300	**A553_79.5 P112 BN112M4**	301
17.6	1971	2.5	79.3	50000	**A703_79.3 S3 M3LC4**	308	**A703_79.3 P112 BN112M4**	309
19.3	1802	2.8	72.5	50000	**A703_72.5 S3 M3LC4**	308	**A703_72.5 P112 BN112M4**	309
19.9	1749	1.6	70.4	30000	**A603_70.4 S3 M3LC4**	304	**A603_70.4 P112 BN112M4**	305
20.9	1663	3.0	66.9	50000	**A703_66.9 S3 M3LC4**	308	**A703_66.9 P112 BN112M4**	309
21.5	1615	1.7	65.0	30000	**A603_65.0 S3 M3LC4**	304	**A603_65.0 P112 BN112M4**	305
21.8	1598	1.3	64.3	30000	**A553_64.3 S3 M3LC4**	300	**A553_64.3 P112 BN112M4**	301
21.9	1587	0.9	63.9	14700	**A503_63.9 S3 M3LC4**	296	**A503_63.9 P112 BN112M4**	297
24.6	1411	1.1	56.8	14800	**A503_56.8 S3 M3LC4**	296	**A503_56.8 P112 BN112M4**	297
25.2	1381	2.0	55.6	30000	**A603_55.6 S3 M3LC4**	304	**A603_55.6 P112 BN112M4**	305
27.1	1284	1.2	51.7	14900	**A503_51.7 S3 M3LC4**	296	**A503_51.7 P112 BN112M4**	297
27.3	1275	2.2	51.3	30000	**A603_51.3 S3 M3LC4**	304	**A603_51.3 P112 BN112M4**	305
28	1266	1.6	51.0	30000	**A553_51.0 S3 M3LC4**	300	**A553_51.0 P112 BN112M4**	301
31	1123	2.5	45.2	30000	**A603_45.2 S3 M3LC4**	304	**A603_45.2 P112 BN112M4**	305
31	1118	1.3	45.0	14900	**A503_45.0 S3 M3LC4**	296	**A503_45.0 P112 BN112M4**	297
34	1036	2.7	41.7	30000	**A603_41.7 S3 M3LC4**	304	**A603_41.7 P112 BN112M4**	305
34	1017	1.5	40.9	14800	**A503_40.9 S3 M3LC4**	296	**A503_40.9 P112 BN112M4**	297
35	1001	2.0	40.3	30000	**A553_40.3 S3 M3LC4**	300	**A553_40.3 P112 BN112M4**	301
39	884	1.7	35.6	14700	**A503_35.6 S3 M3LC4**	296	**A503_35.6 P112 BN112M4**	297
41	852	3.3	34.3	30000	**A603_34.3 S3 M3LC4**	304	**A603_34.3 P112 BN112M4**	305
43	804	1.9	32.4	14500	**A503_32.4 S3 M3LC4**	296	**A503_32.4 P112 BN112M4**	297
47	744	2.7	29.9	30000	**A553_29.9 S3 M3LC4**	300	**A553_29.9 P112 BN112M4**	301
49	727	1.0	28.3	10900	**A412_28.3 S3 M3LC4**	292	**A412_28.3 P112 BN112M4**	293
53	657	2.3	26.4	14100	**A503_26.4 S3 M3LC4**	296	**A503_26.4 P112 BN112M4**	297
55	659	0.9	25.7	7420	**A352_25.7 S3 M3LC4**	288	**A352_25.7 P112 BN112M4**	289
58	597	2.5	24.0	13900	**A503_24.0 S3 M3LC4**	296	**A503_24.0 P112 BN112M4**	297
59	591	3.3	23.8	30000	**A553_23.8 S3 M3LC4**	300	**A553_23.8 P112 BN112M4**	301

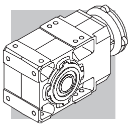

4.0 kW

n_2 min^{-1}	M_2 Nm	S	i	R_{n2} N	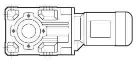			
62	582	1.2	22.7	10500	A412_22.7 S3 M3LC4	292	A412_22.7 P112 BN112M4	293
62	577	1.0	22.5	7400	A352_22.5 S3 M3LC4	288	A352_22.5 P112 BN112M4	289
67	537	2.2	20.9	15100	A502_20.9 S3 M3LC4	296	A502_20.9 P112 BN112M4	297
69	524	1.1	20.4	7360	A352_20.4 S3 M3LC4	288	A352_20.4 P112 BN112M4	289
78	462	0.9	18.0	3930	A302_18.0 S3 M3LC4	284	A302_18.0 P112 BN112M4	285
79	456	1.4	17.8	10100	A412_17.8 S3 M3LC4	292	A412_17.8 P112 BN112M4	293
83	435	1.4	17.0	7240	A352_17.0 S3 M3LC4	288	A352_17.0 P112 BN112M4	289
84	425	2.8	16.6	14200	A502_16.6 S3 M3LC4	296	A502_16.6 P112 BN112M4	297
86	419	0.9	16.3	3970	A302_16.3 S3 M3LC4	284	A302_16.3 P112 BN112M4	285
87	413	1.5	16.1	9940	A412_16.1 S3 M3LC4	292	A412_16.1 P112 BN112M4	293
90	397	1.5	15.5	7160	A352_15.5 S3 M3LC4	288	A352_15.5 P112 BN112M4	289
102	353	1.7	13.8	9610	A412_13.8 S3 M3LC4	292	A412_13.8 P112 BN112M4	293
103	348	1.1	13.6	4000	A302_13.6 S3 M3LC4	284	A302_13.6 P112 BN112M4	285
107	336	3.3	13.1	13300	A502_13.1 S3 M3LC4	296	A502_13.1 P112 BN112M4	297
107	335	1.8	13.1	7000	A352_13.1 S3 M3LC4	288	A352_13.1 P112 BN112M4	289
119	302	1.0	11.8	3960	A302_11.8 S3 M3LC4	284	A302_11.8 P112 BN112M4	285
119	302	1.3	11.8	7050	A352_11.8 S3 M3LC4	288	A352_11.8 P112 BN112M4	289
119	301	1.8	11.7	9260	A412_11.7 S3 M3LC4	292	A412_11.7 P112 BN112M4	293
126	285	1.2	22.8	3980	A302_22.8 S3 M3LB2	284	A302_22.8 P112 BN112M2	285
132	273	1.5	10.6	6910	A352_10.6 S3 M3LC4	288	A352_10.6 P112 BN112M4	289
134	268	1.3	10.5	3970	A302_10.5 S3 M3LC4	284	A302_10.5 P112 BN112M4	285
138	260	2.1	10.1	8960	A412_10.1 S3 M3LC4	292	A412_10.1 P112 BN112M4	293
150	239	1.3	9.3	3900	A302_9.3 S3 M3LC4	284	A302_9.3 P112 BN112M4	285
150	239	1.7	9.3	6730	A352_9.3 S3 M3LC4	288	A352_9.3 P112 BN112M4	289
152	236	2.3	9.2	8740	A412_9.2 S3 M3LC4	292	A412_9.2 P112 BN112M4	293
165	217	1.4	8.5	3860	A302_8.5 S3 M3LC4	284	A302_8.5 P112 BN112M4	285
165	217	1.8	8.5	6590	A352_8.5 S3 M3LC4	288	A352_8.5 P112 BN112M4	289
167	215	1.0	8.4	2300	A202_8.4 S3 M3LC4	280	A202_8.4 P112 BN112M4	281
168	214	2.6	8.3	8520	A412_8.3 S3 M3LC4	292	A412_8.3 P112 BN112M4	293
192	187	1.1	7.3	2310	A202_7.3 S3 M3LC4	280	A202_7.3 P112 BN112M4	281
197	183	3.0	7.1	8180	A412_7.1 S3 M3LC4	292	A412_7.1 P112 BN112M4	293
199	180	1.7	7.0	3770	A302_7.0 S3 M3LC4	284	A302_7.0 P112 BN112M4	285
199	180	2.1	7.0	6310	A352_7.0 S3 M3LC4	288	A352_7.0 P112 BN112M4	289
214	168	1.3	6.5	2310	A202_6.5 S3 M3LC4	280	A202_6.5 P112 BN112M4	281
218	165	1.8	6.4	3720	A302_6.4 S3 M3LC4	284	A302_6.4 P112 BN112M4	285
218	165	2.1	6.4	6180	A352_6.4 S3 M3LC4	288	A352_6.4 P112 BN112M4	289
256	140	1.0	5.5	1910	A102_5.5 S3 M3LC4	276	A102_5.5 P112 BN112M4	277
259	139	2.2	5.4	3610	A302_5.4 S3 M3LC4	284	A302_5.4 P112 BN112M4	285
259	139	2.4	5.4	5920	A352_5.4 S3 M3LC4	288	A352_5.4 P112 BN112M4	289
262	137	1.5	5.4	2300	A202_5.4 S3 M3LC4	280	A202_5.4 P112 BN112M4	281
270	133	3.0	10.6	5850	A352_10.6 S3 M3LB2	288	A352_10.6 P112 BN112M2	289
308	117	3.4	9.3	5650	A352_9.3 S3 M3LB2	288	A352_9.3 P112 BN112M2	289
343	105	2.1	8.4	2230	A202_8.4 S3 M3LB2	280	A202_8.4 P112 BN112M2	281
409	88	3.4	7.0	3280	A302_7.0 S3 M3LB2	284	A302_7.0 P112 BN112M2	285
453	79	1.7	6.3	2240	A102_6.3 S3 M3LB2	276	A102_6.3 P112 BN112M2	277
536	67	2.8	5.4	2080	A202_5.4 S3 M3LB2	280	A202_5.4 P112 BN112M2	281

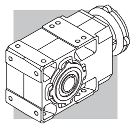

5.5 kW

n_2 min^{-1}	M_2 Nm	S	i	R_{n2} N	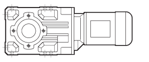			
3.0	15805	0.9	486.6	75000	**A904_486.6 S4 M4SA4**	314	**A904_486.6 P132 BN132S4**	315
3.2	14589	1.0	449.2	75000	**A904_449.2 S4 M4SA4**	314	**A904_449.2 P132 BN132S4**	315
3.7	12519	1.1	385.4	75000	**A904_385.4 S4 M4SA4**	314	**A904_385.4 P132 BN132S4**	315
4.0	11556	1.2	355.8	75000	**A904_355.8 S4 M4SA4**	314	**A904_355.8 P132 BN132S4**	315
4.7	9903	1.4	304.9	75000	**A904_304.9 S4 M4SA4**	314	**A904_304.9 P132 BN132S4**	315
5.1	9141	1.5	281.4	75000	**A904_281.4 S4 M4SA4**	314	**A904_281.4 P132 BN132S4**	315
5.2	9006	0.9	277.3	65000	**A804_277.3 S4 M4SA4**	311	**A804_277.3 P132 BN132S4**	312
6.2	7556	1.1	232.6	65000	**A804_232.6 S4 M4SA4**	311	**A804_232.6 P132 BN132S4**	312
6.4	7354	1.9	226.4	75000	**A904_226.4 S4 M4SA4**	314	**A904_226.4 P132 BN132S4**	315
6.7	6975	1.1	214.7	65000	**A804_214.7 S4 M4SA4**	311	**A804_214.7 P132 BN132S4**	312
6.9	6789	2.1	209.0	75000	**A904_209.0 S4 M4SA4**	314	**A904_209.0 P132 BN132S4**	315
8.0	5846	2.4	180.0	75000	**A904_180.0 S4 M4SA4**	314	**A904_180.0 P132 BN132S4**	315
8.4	5564	1.4	171.3	65000	**A804_171.3 S4 M4SA4**	311	**A804_171.3 P132 BN132S4**	312
8.5	5514	0.9	169.8	50000	**A704_169.8 S4 M4SA4**	308	**A704_169.8 P132 BN132S4**	309
8.7	5396	2.6	166.1	75000	**A904_166.1 S4 M4SA4**	314	**A904_166.1 P132 BN132S4**	315
9.2	5207	1.5	156.8	65000	**A803_156.8 S4 M4SA4**	311	**A803_156.8 P132 BN132S4**	312
9.5	5015	2.8	151.0	75000	**A903_151.0 S4 M4SA4**	314	**A903_151.0 P132 BN132S4**	315
9.9	4807	1.7	144.7	65000	**A803_144.7 S4 M4SA4**	311	**A803_144.7 P132 BN132S4**	312
10.2	4711	1.1	141.9	50000	**A703_141.9 S4 M4SA4**	308	**A703_141.9 P132 BN132S4**	309
10.3	4629	2.8	139.4	75000	**A903_139.4 S4 M4SA4**	314	**A903_139.4 P132 BN132S4**	315
11.0	4339	1.2	130.7	50000	**A703_130.7 S4 M4SA4**	308	**A703_130.7 P132 BN132S4**	309
11.4	4206	3.1	126.6	75000	**A903_126.6 S4 M4SA4**	314	**A903_126.6 P132 BN132S4**	315
11.5	4172	1.9	125.6	65000	**A803_125.6 S4 M4SA4**	311	**A803_125.6 P132 BN132S4**	312
11.9	4006	1.2	120.6	50000	**A703_120.6 S4 M4SA4**	308	**A703_120.6 P132 BN132S4**	309
12.4	3851	2.1	116.0	65000	**A803_116.0 S4 M4SA4**	311	**A803_116.0 P132 BN132S4**	312
13.8	3462	1.4	104.2	50000	**A703_104.2 S4 M4SA4**	308	**A703_104.2 P132 BN132S4**	309
13.8	3455	2.3	104.0	65000	**A803_104.0 S4 M4SA4**	311	**A803_104.0 P132 BN132S4**	312
15.0	3195	1.6	96.2	50000	**A703_96.2 S4 M4SA4**	308	**A703_96.2 P132 BN132S4**	309
15.0	3189	2.5	96.0	65000	**A803_96.0 S4 M4SA4**	311	**A803_96.0 P132 BN132S4**	312
16.1	2962	2.7	89.2	65000	**A803_89.2 S4 M4SA4**	311	**A803_89.2 P132 BN132S4**	312
16.7	2868	1.0	86.4	30000	**A603_86.4 S4 M4SA4**	304	**A603_86.4 P132 BN132S4**	305
16.8	2854	1.8	85.9	50000	**A703_85.9 S4 M4SA4**	308	**A703_85.9 P132 BN132S4**	309
17.5	2734	2.9	82.3	65000	**A803_82.3 S4 M4SA4**	311	**A803_82.3 P132 BN132S4**	312
18.1	2648	1.1	79.7	30000	**A603_79.7 S4 M4SA4**	304	**A603_79.7 P132 BN132S4**	305
18.2	2635	1.9	79.3	50000	**A703_79.3 S4 M4SA4**	308	**A703_79.3 P132 BN132S4**	309
19.9	2408	2.1	72.5	50000	**A703_72.5 S4 M4SA4**	308	**A703_72.5 P132 BN132S4**	309
19.9	2403	3.3	72.4	65000	**A803_72.4 S4 M4SA4**	311	**A803_72.4 P132 BN132S4**	312
20.5	2338	1.2	70.4	30000	**A603_70.4 S4 M4SA4**	304	**A603_70.4 P132 BN132S4**	305
21.5	2223	2.2	66.9	50000	**A703_66.9 S4 M4SA4**	308	**A703_66.9 P132 BN132S4**	309
22.2	2158	1.3	65.0	30000	**A603_65.0 S4 M4SA4**	304	**A603_65.0 P132 BN132S4**	305
22.4	2136	0.9	64.3	30000	**A553_64.3 S4 M4SA4**	300	**A553_64.3 P132 BN132S4**	301
25.0	1915	2.6	57.7	50000	**A703_57.7 S4 M4SA4**	308	**A703_57.7 P132 BN132S4**	309
25.9	1847	1.5	55.6	30000	**A603_55.6 S4 M4SA4**	304	**A603_55.6 P132 BN132S4**	305
27.1	1768	2.8	53.2	50000	**A703_53.2 S4 M4SA4**	308	**A703_53.2 P132 BN132S4**	309
28.1	1705	1.6	51.3	30000	**A603_51.3 S4 M4SA4**	304	**A603_51.3 P132 BN132S4**	305
28.3	1692	1.2	51.0	30000	**A553_51.0 S4 M4SA4**	300	**A553_51.0 P132 BN132S4**	301
29.4	1627	3.1	49.0	50000	**A703_49.0 S4 M4SA4**	308	**A703_49.0 P132 BN132S4**	309
32	1502	3.2	45.2	50000	**A703_45.2 S4 M4SA4**	308	**A703_45.2 P132 BN132S4**	309
32	1501	1.9	45.2	30000	**A603_45.2 S4 M4SA4**	304	**A603_45.2 P132 BN132S4**	305
32	1495	1.0	45.0	12400	**A503_45.0 S4 M4SA4**	296	**A503_45.0 P132 BN132S4**	297
35	1385	2.0	41.7	30000	**A603_41.7 S4 M4SA4**	304	**A603_41.7 P132 BN132S4**	305

5.5 kW

n2 min-1	M2 Nm	S	i	Rn2 N	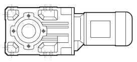		IEC	
35	1360	1.1	40.9	12600	**A503_40.9 S4 M4SA4**	296	**A503_40.9 P132 BN132S4**	297
36	1338	1.5	40.3	30000	**A553_40.3 S4 M4SA4**	300	**A553_40.3 P132 BN132S4**	301
40	1182	1.3	35.6	12700	**A503_35.6 S4 M4SA4**	296	**A503_35.6 P132 BN132S4**	297
42	1139	2.5	34.3	30000	**A603_34.3 S4 M4SA4**	304	**A603_34.3 P132 BN132S4**	305
44	1075	1.4	32.4	12700	**A503_32.4 S4 M4SA4**	296	**A503_32.4 P132 BN132S4**	297
45	1051	2.7	31.7	30000	**A603_31.7 S4 M4SA4**	304	**A603_31.7 P132 BN132S4**	305
48	994	2.0	29.9	30000	**A553_29.9 S4 M4SA4**	300	**A553_29.9 P132 BN132S4**	301
52	925	3.0	27.9	30000	**A603_27.9 S4 M4SA4**	304	**A603_27.9 P132 BN132S4**	305
54	878	1.7	26.4	12600	**A503_26.4 S4 M4SA4**	296	**A503_26.4 P132 BN132S4**	297
56	854	3.3	25.7	30000	**A603_25.7 S4 M4SA4**	304	**A603_25.7 P132 BN132S4**	305
60	799	1.9	24.0	12500	**A503_24.0 S4 M4SA4**	296	**A503_24.0 P132 BN132S4**	297
61	790	2.5	23.8	29800	**A553_23.8 S4 M4SA4**	300	**A553_23.8 P132 BN132S4**	301
69	718	1.7	20.9	14400	**A502_20.9 S4 M4SA4**	296	**A502_20.9 P132 BN132S4**	297
70	706	2.8	20.6	30000	**A602_20.6 S4 M4SA4**	304	**A602_20.6 P132 BN132S4**	305
75	660	2.7	19.2	29300	**A552_19.2 S4 M4SA4**	300	**A552_19.2 P132 BN132S4**	301
81	609	1.0	17.8	9280	**A412_17.8 S4 M4SA4**	292	**A412_17.8 P132 BN132S4**	293
86	574	3.5	16.7	30000	**A602_16.7 S4 M4SA4**	304	**A602_16.7 P132 BN132S4**	305
87	568	2.1	16.6	13600	**A502_16.6 S4 M4SA4**	296	**A502_16.6 P132 BN132S4**	297
89	552	1.1	16.1	9160	**A412_16.1 S4 M4SA4**	292	**A412_16.1 P132 BN132S4**	293
92	538	3.3	15.7	27700	**A552_15.7 S4 M4SA4**	300	**A552_15.7 P132 BN132S4**	301
105	472	1.2	13.8	8940	**A412_13.8 S4 M4SA4**	292	**A412_13.8 P132 BN132S4**	293
110	450	2.4	13.1	12800	**A502_13.1 S4 M4SA4**	296	**A502_13.1 P132 BN132S4**	297
122	404	1.0	11.8	6450	**A352_11.8 S4 M4SA4**	288	**A352_11.8 P132 BN132S4**	289
123	403	1.4	11.7	8670	**A412_11.7 S4 M4SA4**	292	**A412_11.7 P132 BN132S4**	293
135	365	1.1	10.6	6360	**A352_10.6 S4 M4SA4**	288	**A352_10.6 P132 BN132S4**	289
142	348	1.5	10.1	8440	**A412_10.1 S4 M4SA4**	292	**A412_10.1 P132 BN132S4**	293
148	334	3.0	9.7	11800	**A502_9.7 S4 M4SA4**	296	**A502_9.7 P132 BN132S4**	297
155	319	1.3	9.3	6240	**A352_9.3 S4 M4SA4**	288	**A352_9.3 P132 BN132S4**	289
157	316	1.7	9.2	8250	**A412_9.2 S4 M4SA4**	292	**A412_9.2 P132 BN132S4**	293
170	290	1.3	8.5	6140	**A352_8.5 S4 M4SA4**	288	**A352_8.5 P132 BN132S4**	289
173	286	1.9	8.3	8080	**A412_8.3 S4 M4SA4**	292	**A412_8.3 P132 BN132S4**	293
202	244	2.3	7.1	7790	**A412_7.1 S4 M4SA4**	292	**A412_7.1 P132 BN132S4**	293
205	241	1.5	7.0	5930	**A352_7.0 S4 M4SA4**	288	**A352_7.0 P132 BN132S4**	289
225	220	1.6	6.4	5820	**A352_6.4 S4 M4SA4**	288	**A352_6.4 P132 BN132S4**	289
246	201	2.7	11.7	7430	**A412_11.7 S4 M4SA2**	292	**A412_11.7 P132 BN132SA2**	293
266	186	1.8	5.4	5610	**A352_5.4 S4 M4SA4**	288	**A352_5.4 P132 BN132S4**	289
275	180	3.1	5.2	7230	**A412_5.2 S4 M4SA4**	292	**A412_5.2 P132 BN132S4**	293
285	173	2.5	10.1	7170	**A412_10.1 S4 M4SA2**	292	**A412_10.1 P132 BN132SA2**	293
411	120	3.1	7.0	5060	**A352_7.0 S4 M4SA2**	288	**A352_7.0 P132 BN132SA2**	289

7.5 kW

n2 min-1	M2 Nm	S	i	Rn2 N	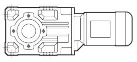		IEC	
4.0	15759	0.9	355.8	75000	**A904_355.8 S4 M4LA4**	314	**A904_355.8 P132 BN132MA4**	315
4.7	13504	1.0	304.9	75000	**A904_304.9 S4 M4LA4**	314	**A904_304.9 P132 BN132MA4**	315
5.1	12465	1.1	281.4	75000	**A904_281.4 S4 M4LA4**	314	**A904_281.4 P132 BN132MA4**	315
6.4	10029	1.4	226.4	75000	**A904_226.4 S4 M4LA4**	314	**A904_226.4 P132 BN132MA4**	315
6.9	9257	1.5	209.0	75000	**A904_209.0 S4 M4LA4**	314	**A904_209.0 P132 BN132MA4**	315

7.5 kW

n_2 min-1	M_2 Nm	S	i	R_{n2} N			IEC	
8.0	7971	1.8	180.0	75000	**A904_180.0 S4 M4LA4**	314	**A904_180.0 P132 BN132MA4**	315
8.4	7587	1.1	171.3	65000	**A804_171.3 S4 M4LA4**	311	**A804_171.3 P132 BN132MA4**	312
8.7	7358	1.9	166.1	75000	**A904_166.1 S4 M4LA4**	314	**A904_166.1 P132 BN132MA4**	315
9.2	7101	1.1	156.8	65000	**A803_156.8 S4 M4LA4**	311	**A803_156.8 P132 BN132MA4**	312
9.5	6839	2.0	151.0	75000	**A903_151.0 S4 M4LA4**	314	**A903_151.0 P132 BN132MA4**	315
9.9	6555	1.2	144.7	65000	**A803_144.7 S4 M4LA4**	311	**A803_144.7 P132 BN132MA4**	312
10.3	6313	2.0	139.4	75000	**A903_139.4 S4 M4LA4**	314	**A903_139.4 P132 BN132MA4**	315
11.4	5735	2.3	126.6	75000	**A903_126.6 S4 M4LA4**	314	**A903_126.6 P132 BN132MA4**	315
11.5	5689	1.4	125.6	65000	**A803_125.6 S4 M4LA4**	311	**A803_125.6 P132 BN132MA4**	312
11.9	5462	0.9	120.6	50000	**A703_120.6 S4 M4LA4**	308	**A703_120.6 P132 BN132MA4**	309
12.3	5294	2.6	116.9	75000	**A903_116.9 S4 M4LA4**	314	**A903_116.9 P132 BN132MA4**	315
12.4	5251	1.5	116.0	65000	**A803_116.0 S4 M4LA4**	311	**A803_116.0 P132 BN132MA4**	312
13.5	4838	2.9	106.8	75000	**A903_106.8 S4 M4LA4**	314	**A903_106.8 P132 BN132MA4**	315
13.8	4721	1.1	104.2	50000	**A703_104.2 S4 M4LA4**	308	**A703_104.2 P132 BN132MA4**	309
13.8	4711	1.7	104.0	65000	**A803_104.0 S4 M4LA4**	311	**A803_104.0 P132 BN132MA4**	312
14.6	4465	3.1	98.6	75000	**A903_98.6 S4 M4LA4**	314	**A903_98.6 P132 BN132MA4**	315
15.0	4357	1.1	96.2	50000	**A703_96.2 S4 M4LA4**	308	**A703_96.2 P132 BN132MA4**	309
15.0	4349	1.8	96.0	65000	**A803_96.0 S4 M4LA4**	311	**A803_96.0 P132 BN132MA4**	312
16.1	4039	2.0	89.2	65000	**A803_89.2 S4 M4LA4**	311	**A803_89.2 P132 BN132MA4**	312
16.8	3892	1.3	85.9	50000	**A703_85.9 S4 M4LA4**	308	**A703_85.9 P132 BN132MA4**	309
17.5	3728	2.1	82.3	65000	**A803_82.3 S4 M4LA4**	311	**A803_82.3 P132 BN132MA4**	312
18.2	3593	1.4	79.3	50000	**A703_79.3 S4 M4LA4**	308	**A703_79.3 P132 BN132MA4**	309
19.9	3284	1.5	72.5	50000	**A703_72.5 S4 M4LA4**	308	**A703_72.5 P132 BN132MA4**	309
19.9	3277	2.4	72.4	65000	**A803_72.4 S4 M4LA4**	311	**A803_72.4 P132 BN132MA4**	312
20.5	3188	0.9	70.4	30000	**A603_70.4 S4 M4LA4**	304	**A603_70.4 P132 BN132MA4**	305
21.5	3032	1.6	66.9	50000	**A703_66.9 S4 M4LA4**	308	**A703_66.9 P132 BN132MA4**	309
21.6	3025	2.6	66.8	65000	**A803_66.8 S4 M4LA4**	311	**A803_66.8 P132 BN132MA4**	312
22.2	2943	1.0	65.0	30000	**A603_65.0 S4 M4LA4**	304	**A603_65.0 P132 BN132MA4**	305
24.1	2707	3.0	59.8	63800	**A803_59.8 S4 M4LA4**	311	**A803_59.8 P132 BN132MA4**	312
25.0	2612	1.9	57.7	50000	**A703_57.7 S4 M4LA4**	308	**A703_57.7 P132 BN132MA4**	309
25.9	2518	1.1	55.6	30000	**A603_55.6 S4 M4LA4**	304	**A603_55.6 P132 BN132MA4**	305
26.1	2499	3.2	55.2	62600	**A803_55.2 S4 M4LA4**	311	**A803_55.2 P132 BN132MA4**	312
27.1	2411	2.1	53.2	50000	**A703_53.2 S4 M4LA4**	308	**A703_53.2 P132 BN132MA4**	309
28.1	2324	1.2	51.3	30000	**A603_51.3 S4 M4LA4**	304	**A603_51.3 P132 BN132MA4**	305
29.4	2219	2.3	49.0	50000	**A703_49.0 S4 M4LA4**	308	**A703_49.0 P132 BN132MA4**	309
32	2048	2.3	45.2	50000	**A703_45.2 S4 M4LA4**	308	**A703_45.2 P132 BN132MA4**	309
32	2046	1.4	45.2	30000	**A603_45.2 S4 M4LA4**	304	**A603_45.2 P132 BN132MA4**	305
35	1889	1.5	41.7	30000	**A603_41.7 S4 M4LA4**	304	**A603_41.7 P132 BN132MA4**	305
36	1825	1.1	40.3	30000	**A553_40.3 S4 M4LA4**	300	**A553_40.3 P132 BN132MA4**	301
38	1738	2.8	38.4	50000	**A703_38.4 S4 M4LA4**	308	**A703_38.4 P132 BN132MA4**	309
40	1612	0.9	35.6	10100	**A503_35.6 S4 M4LA4**	296	**A503_35.6 P132 BN132MA4**	297
41	1605	2.8	35.4	50000	**A703_35.4 S4 M4LA4**	308	**A703_35.4 P132 BN132MA4**	309
42	1553	1.8	34.3	30000	**A603_34.3 S4 M4LA4**	304	**A603_34.3 P132 BN132MA4**	305
44	1466	1.0	32.4	10300	**A503_32.4 S4 M4LA4**	296	**A503_32.4 P132 BN132MA4**	297
45	1434	2.0	31.7	30000	**A603_31.7 S4 M4LA4**	304	**A603_31.7 P132 BN132MA4**	305
48	1355	1.5	29.9	30000	**A553_29.9 S4 M4LA4**	300	**A553_29.9 P132 BN132MA4**	301
52	1261	2.2	27.9	30000	**A603_27.9 S4 M4LA4**	304	**A603_27.9 P132 BN132MA4**	305
54	1197	1.3	26.4	10700	**A503_26.4 S4 M4LA4**	296	**A503_26.4 P132 BN132MA4**	297
56	1164	2.4	25.7	30000	**A603_25.7 S4 M4LA4**	304	**A603_25.7 P132 BN132MA4**	305
60	1089	1.4	24.0	10800	**A503_24.0 S4 M4LA4**	296	**A503_24.0 P132 BN132MA4**	297
61	1077	1.8	23.8	28800	**A553_23.8 S4 M4LA4**	300	**A553_23.8 P132 BN132MA4**	301

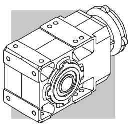

7.5 kW

n2 min-1	M2 Nm	S	i	Rn2 N			IEC	
69	979	1.2	20.9	13700	**A502_20.9 S4 M4LA4**	296	**A502_20.9 P132 BN132MA4**	297
70	963	2.1	20.6	30000	**A602_20.6 S4 M4LA4**	304	**A602_20.6 P132 BN132MA4**	305
75	900	2.0	19.2	28800	**A552_19.2 S4 M4LA4**	300	**A552_19.2 P132 BN132MA4**	301
86	783	2.6	16.7	30000	**A602_16.7 S4 M4LA4**	304	**A602_16.7 P132 BN132MA4**	305
87	775	1.5	16.6	13000	**A502_16.6 S4 M4LA4**	296	**A502_16.6 P132 BN132MA4**	297
92	734	2.5	15.7	27300	**A552_15.7 S4 M4LA4**	300	**A552_15.7 P132 BN132MA4**	301
105	644	0.9	13.8	8130	**A412_13.8 S4 M4LA4**	292	**A412_13.8 P132 BN132MA4**	293
110	613	1.8	13.1	12300	**A502_13.1 S4 M4LA4**	296	**A502_13.1 P132 BN132MA4**	297
110	612	2.9	13.1	26100	**A552_13.1 S4 M4LA4**	300	**A552_13.1 P132 BN132MA4**	301
113	594	3.4	12.7	30000	**A602_12.7 S4 M4LA4**	304	**A602_12.7 P132 BN132MA4**	305
123	549	1.0	11.7	7970	**A412_11.7 S4 M4LA4**	292	**A412_11.7 P132 BN132MA4**	293
142	474	1.1	10.1	7850	**A412_10.1 S4 M4LA4**	292	**A412_10.1 P132 BN132MA4**	293
148	455	2.2	9.7	11500	**A502_9.7 S4 M4LA4**	296	**A502_9.7 P132 BN132MA4**	297
155	436	0.9	9.3	5650	**A352_9.3 S4 M4LA4**	288	**A352_9.3 P132 BN132MA4**	289
157	430	1.3	9.2	7710	**A412_9.2 S4 M4LA4**	292	**A412_9.2 P132 BN132MA4**	293
170	396	1.0	8.5	5600	**A352_8.5 S4 M4LA4**	288	**A352_8.5 P132 BN132MA4**	289
173	390	1.4	8.3	7590	**A412_8.3 S4 M4LA4**	292	**A412_8.3 P132 BN132MA4**	293
186	362	2.6	7.7	10800	**A502_7.7 S4 M4LA4**	296	**A502_7.7 P132 BN132MA4**	297
202	333	1.7	7.1	7370	**A412_7.1 S4 M4LA4**	292	**A412_7.1 P132 BN132MA4**	293
205	329	1.1	7.0	5490	**A352_7.0 S4 M4LA4**	288	**A352_7.0 P132 BN132MA4**	289
225	300	1.2	6.4	5420	**A352_6.4 S4 M4LA4**	288	**A352_6.4 P132 BN132MA4**	289
266	253	1.3	5.4	5270	**A352_5.4 S4 M4LA4**	288	**A352_5.4 P132 BN132MA4**	289
275	245	2.2	5.2	6920	**A412_5.2 S4 M4LA4**	292	**A412_5.2 P132 BN132MA4**	293
315	214	2.5	9.2	6710	**A412_9.2 S4 M4SB2**	292	**A412_9.2 P132 BN132SB2**	293
348	194	2.6	8.3	6550	**A412_8.3 S4 M4SB2**	292	**A412_8.3 P132 BN132SB2**	293
413	163	2.3	7.0	4830	**A352_7.0 S4 M4SB2**	288	**A352_7.0 P132 BN132SB2**	289
536	126	2.7	5.4	4550	**A352_5.4 S4 M4SB2**	288	**A352_5.4 P132 BN132SB2**	289

9.2 kW

n2 min-1	M2 Nm	S	i	Rn2 N			IEC	
5.1	15291	0.9	281.4	75000	**A904_281.4 S4 M4LB4**	314	**A904_281.4 P132 BN132MB4**	315
6.4	12302	1.1	226.4	75000	**A904_226.4 S4 M4LB4**	314	**A904_226.4 P132 BN132MB4**	315
6.9	11356	1.2	209.0	75000	**A904_209.0 S4 M4LB4**	314	**A904_209.0 P132 BN132MB4**	315
8.0	9778	1.4	180.0	75000	**A904_180.0 S4 M4LB4**	314	**A904_180.0 P132 BN132MB4**	315
8.4	9307	0.9	171.3	65000	**A804_171.3 S4 M4LB4**	311	**A804_171.3 P132 BN132MB4**	312
8.7	9026	1.6	166.1	75000	**A904_166.1 S4 M4LB4**	314	**A904_166.1 P132 BN132MB4**	315
9.2	8711	0.9	156.8	65000	**A803_156.8 S4 M4LB4**	311	**A803_156.8 P132 BN132MB4**	312
9.5	8389	1.6	151.0	75000	**A903_151.0 S4 M4LB4**	314	**A903_151.0 P132 BN132MB4**	315
9.9	8040	1.0	144.7	65000	**A803_144.7 S4 M4LB4**	311	**A803_144.7 P132 BN132MB4**	312
10.3	7744	1.6	139.4	75000	**A903_139.4 S4 M4LB4**	314	**A903_139.4 P132 BN132MB4**	315
11.4	7035	1.9	126.6	75000	**A903_126.6 S4 M4LB4**	314	**A903_126.6 P132 BN132MB4**	315
11.5	6978	1.1	125.6	65000	**A803_125.6 S4 M4LB4**	311	**A803_125.6 P132 BN132MB4**	312
12.3	6494	2.2	116.9	75000	**A903_116.9 S4 M4LB4**	314	**A903_116.9 P132 BN132MB4**	315
12.4	6442	1.2	116.0	65000	**A803_116.0 S4 M4LB4**	311	**A803_116.0 P132 BN132MB4**	312
13.5	5934	2.4	106.8	75000	**A903_106.8 S4 M4LB4**	314	**A903_106.8 P132 BN132MB4**	315
13.8	5779	1.4	104.0	65000	**A803_104.0 S4 M4LB4**	311	**A803_104.0 P132 BN132MB4**	312
14.6	5478	2.6	98.6	75000	**A903_98.6 S4 M4LB4**	314	**A903_98.6 P132 BN132MB4**	315

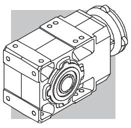

9.2 kW

n_2 min-1	M_2 Nm	S	i	R_{n2} N	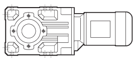			
15.0	5345	0.9	96.2	50000	**A703_96.2 S4 M4LB4**	308	**A703_96.2 P132 BN132MB4**	309
15.0	5335	1.5	96.0	65000	**A803_96.0 S4 M4LB4**	311	**A803_96.0 P132 BN132MB4**	312
16.1	4954	1.6	89.2	65000	**A803_89.2 S4 M4LB4**	311	**A803_89.2 P132 BN132MB4**	312
16.5	4837	2.9	87.1	75000	**A903_87.1 S4 M4LB4**	314	**A903_87.1 P132 BN132MB4**	315
16.8	4774	1.0	85.9	50000	**A703_85.9 S4 M4LB4**	308	**A703_85.9 P132 BN132MB4**	309
17.5	4573	1.7	82.3	65000	**A803_82.3 S4 M4LB4**	311	**A803_82.3 P132 BN132MB4**	312
17.9	4465	3.1	80.4	75000	**A903_80.4 S4 M4LB4**	314	**A903_80.4 P132 BN132MB4**	315
18.2	4407	1.1	79.3	50000	**A703_79.3 S4 M4LB4**	308	**A703_79.3 P132 BN132MB4**	309
19.3	4137	3.4	74.5	75000	**A903_74.5 S4 M4LB4**	314	**A903_74.5 P132 BN132MB4**	315
19.9	4029	1.2	72.5	50000	**A703_72.5 S4 M4LB4**	308	**A703_72.5 P132 BN132MB4**	309
19.9	4020	2.0	72.4	65000	**A803_72.4 S4 M4LB4**	311	**A803_72.4 P132 BN132MB4**	312
21.5	3719	1.3	66.9	50000	**A703_66.9 S4 M4LB4**	308	**A703_66.9 P132 BN132MB4**	309
21.6	3711	2.2	66.8	63800	**A803_66.8 S4 M4LB4**	311	**A803_66.8 P132 BN132MB4**	312
24.1	3321	2.4	59.8	62400	**A803_59.8 S4 M4LB4**	311	**A803_59.8 P132 BN132MB4**	312
25.0	3204	1.6	57.7	50000	**A703_57.7 S4 M4LB4**	308	**A703_57.7 P132 BN132MB4**	309
25.9	3089	0.9	55.6	30000	**A603_55.6 S4 M4LB4**	304	**A603_55.6 P132 BN132MB4**	305
26.1	3065	2.6	55.2	61300	**A803_55.2 S4 M4LB4**	311	**A803_55.2 P132 BN132MB4**	312
27.1	2957	1.7	53.2	50000	**A703_53.2 S4 M4LB4**	308	**A703_53.2 P132 BN132MB4**	309
28.1	2851	1.0	51.3	30000	**A603_51.3 S4 M4LB4**	304	**A603_51.3 P132 BN132MB4**	305
29.4	2722	1.8	49.0	50000	**A703_49.0 S4 M4LB4**	308	**A703_49.0 P132 BN132MB4**	309
30	2677	3.0	48.2	59500	**A803_48.2 S4 M4LB4**	311	**A803_48.2 P132 BN132MB4**	312
32	2513	1.9	45.2	50000	**A703_45.2 S4 M4LB4**	308	**A703_45.2 P132 BN132MB4**	309
32	2510	1.1	45.2	30000	**A603_45.2 S4 M4LB4**	304	**A603_45.2 P132 BN132MB4**	305
32	2471	3.0	44.5	58400	**A803_44.5 S4 M4LB4**	311	**A803_44.5 P132 BN132MB4**	312
35	2317	1.2	41.7	30000	**A603_41.7 S4 M4LB4**	304	**A603_41.7 P132 BN132MB4**	305
38	2132	2.3	38.4	50000	**A703_38.4 S4 M4LB4**	308	**A703_38.4 P132 BN132MB4**	309
41	1968	2.3	35.4	50000	**A703_35.4 S4 M4LB4**	308	**A703_35.4 P132 BN132MB4**	309
42	1905	1.5	34.3	30000	**A603_34.3 S4 M4LB4**	304	**A603_34.3 P132 BN132MB4**	305
45	1759	1.6	31.7	30000	**A603_31.7 S4 M4LB4**	304	**A603_31.7 P132 BN132MB4**	305
48	1663	1.2	29.9	29100	**A553_29.9 S4 M4LB4**	300	**A553_29.9 P132 BN132MB4**	301
52	1547	1.8	27.9	30000	**A603_27.9 S4 M4LB4**	304	**A603_27.9 P132 BN132MB4**	305
54	1469	1.0	26.4	9130	**A503_26.4 S4 M4LB4**	296	**A503_26.4 P132 BN132MB4**	297
56	1428	2.0	25.7	30000	**A603_25.7 S4 M4LB4**	304	**A603_25.7 P132 BN132MB4**	305
60	1336	1.1	24.0	9370	**A503_24.0 S4 M4LB4**	296	**A503_24.0 P132 BN132MB4**	297
61	1322	1.5	23.8	27900	**A553_23.8 S4 M4LB4**	300	**A553_23.8 P132 BN132MB4**	301
68	1183	3.4	21.3	46000	**A703_21.3 S4 M4LB4**	308	**A703_21.3 P132 BN132MB4**	309
69	1200	1.0	20.9	13000	**A502_20.9 S4 M4LB4**	296	**A502_20.9 P132 BN132MB4**	297
70	1182	1.7	20.6	30000	**A602_20.6 S4 M4LB4**	304	**A602_20.6 P132 BN132MB4**	305
73	1092	3.4	19.7	45100	**A703_19.7 S4 M4LB4**	308	**A703_19.7 P132 BN132MB4**	309
75	1104	1.6	19.2	28400	**A552_19.2 S4 M4LB4**	300	**A552_19.2 P132 BN132MB4**	301
86	960	2.1	16.7	30000	**A602_16.7 S4 M4LB4**	304	**A602_16.7 P132 BN132MB4**	305
87	951	1.3	16.6	12500	**A502_16.6 S4 M4LB4**	296	**A502_16.6 P132 BN132MB4**	297
92	900	2.0	15.7	27000	**A552_15.7 S4 M4LB4**	300	**A552_15.7 P132 BN132MB4**	301
110	752	1.5	13.1	11900	**A502_13.1 S4 M4LB4**	296	**A502_13.1 P132 BN132MB4**	297
110	750	2.4	13.1	25800	**A552_13.1 S4 M4LB4**	300	**A552_13.1 P132 BN132MB4**	301
113	729	2.7	12.7	30000	**A602_12.7 S4 M4LB4**	304	**A602_12.7 P132 BN132MB4**	305
123	650	2.5	23.8	24100	**A553_23.8 S4 M4LA2**	300	**A553_23.8 P132 BN132M2**	301
139	594	3.0	10.4	24200	**A552_10.4 S4 M4LB4**	300	**A552_10.4 P132 BN132MB4**	301
140	592	3.4	10.3	30000	**A602_10.3 S4 M4LB4**	304	**A602_10.3 P132 BN132MB4**	305
142	581	0.9	10.1	7340	**A412_10.1 S4 M4LB4**	292	**A412_10.1 P132 BN132MB4**	293
148	559	1.8	9.7	11200	**A502_9.7 S4 M4LB4**	296	**A502_9.7 P132 BN132MB4**	297

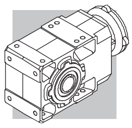

9.2 kW

n_2 min^{-1}	M_2 Nm	S	i	R_{n2} N			IEC	
157	528	1.0	9.2	7250	**A412_9.2 S4 M4LB4**	292	**A412_9.2 P132 BN132MB4**	293
173	478	1.2	8.3	7170	**A412_8.3 S4 M4LB4**	292	**A412_8.3 P132 BN132MB4**	293
186	444	2.1	7.7	10600	**A502_7.7 S4 M4LB4**	296	**A502_7.7 P132 BN132MB4**	297
202	409	1.3	7.1	7020	**A412_7.1 S4 M4LB4**	292	**A412_7.1 P132 BN132MB4**	293
205	403	0.9	7.0	5110	**A352_7.0 S4 M4LB4**	288	**A352_7.0 P132 BN132MB4**	289
225	368	1.0	6.4	5070	**A352_6.4 S4 M4LB4**	288	**A352_6.4 P132 BN132MB4**	289
266	311	1.1	5.4	4980	**A352_5.4 S4 M4LB4**	288	**A352_5.4 P132 BN132MB4**	289
275	301	1.8	5.2	6660	**A412_5.2 S4 M4LB4**	292	**A412_5.2 P132 BN132MB4**	293
319	259	2.0	9.2	6480	**A412_9.2 S4 M4LA2**	292	**A412_9.2 P132 BN132M2**	293
379	218	3.4	7.7	8780	**A502_7.7 S4 M4LA2**	296	**A502_7.7 P132 BN132M2**	297
541	153	2.2	5.4	4410	**A352_5.4 S4 M4LA2**	288	**A352_5.4 P132 BN132M2**	289
559	148	3.0	5.2	5690	**A412_5.2 S4 M4LA2**	292	**A412_5.2 P132 BN132M2**	293

11 kW

n_2 min^{-1}	M_2 Nm	S	i	R_{n2} N			IEC	
6.4	14709	1.0	226.4	75000	**A904_226.4 S4 M4LC4**	314	**A904_226.4 P160 BN160MR4**	315
6.9	13577	1.0	209.0	75000	**A904_209.0 S4 M4LC4**	314	**A904_209.0 P160 BN160MR4**	315
8.0	11691	1.2	180.0	75000	**A904_180.0 S4 M4LC4**	314	**A904_180.0 P160 BN160MR4**	315
8.7	10792	1.3	166.1	75000	**A904_166.1 S4 M4LC4**	314	**A904_166.1 P160 BN160MR4**	315
9.5	10030	1.4	151.0	75000	**A903_151.0 S4 M4LC4**	314	**A903_151.0 P160 BN160MR4**	315
10.3	9259	1.4	139.4	75000	**A903_139.4 S4 M4LC4**	314	**A903_139.4 P160 BN160MR4**	315
11.4	8412	1.6	126.6	75000	**A903_126.6 S4 M4LC4**	314	**A903_126.6 P160 BN160MR4**	315
11.5	8344	1.0	125.6	65000	**A803_125.6 S4 M4LC4**	311	**A803_125.6 P160 BN160MR4**	312
12.3	7765	1.8	116.9	75000	**A903_116.9 S4 M4LC4**	314	**A903_116.9 P160 BN160MR4**	315
12.4	7702	1.0	116.0	65000	**A803_116.0 S4 M4LC4**	311	**A803_116.0 P160 BN160MR4**	312
13.5	7095	2.0	106.8	75000	**A903_106.8 S4 M4LC4**	314	**A903_106.8 P160 BN160MR4**	315
13.8	6910	1.2	104.0	65000	**A803_104.0 S4 M4LC4**	311	**A803_104.0 P160 BN160MR4**	312
14.6	6549	2.1	98.6	75000	**A903_98.6 S4 M4LC4**	314	**A903_98.6 P160 BN160MR4**	315
15.0	6378	1.3	96.0	65000	**A803_96.0 S4 M4LC4**	311	**A803_96.0 P160 BN160MR4**	312
16.1	5923	1.4	89.2	65000	**A803_89.2 S4 M4LC4**	311	**A803_89.2 P160 BN160MR4**	312
16.5	5783	2.4	87.1	75000	**A903_87.1 S4 M4LC4**	314	**A903_87.1 P160 BN160MR4**	315
17.5	5468	1.5	82.3	64500	**A803_82.3 S4 M4LC4**	311	**A803_82.3 P160 BN160MR4**	312
17.9	5338	2.6	80.4	75000	**A903_80.4 S4 M4LC4**	314	**A903_80.4 P160 BN160MR4**	315
18.2	5269	0.9	79.3	50000	**A703_79.3 S4 M4LC4**	308	**A703_79.3 P160 BN160MR4**	309
19.3	4947	2.8	74.5	75000	**A903_74.5 S4 M4LC4**	314	**A903_74.5 P160 BN160MR4**	315
19.9	4817	1.0	72.5	50000	**A703_72.5 S4 M4LC4**	308	**A703_72.5 P160 BN160MR4**	309
19.9	4807	1.7	72.4	63200	**A803_72.4 S4 M4LC4**	311	**A803_72.4 P160 BN160MR4**	312
20.9	4566	3.1	68.8	75000	**A903_68.8 S4 M4LC4**	314	**A903_68.8 P160 BN160MR4**	315
21.5	4446	1.1	66.9	50000	**A703_66.9 S4 M4LC4**	308	**A703_66.9 P160 BN160MR4**	309
21.6	4437	1.8	66.8	62200	**A803_66.8 S4 M4LC4**	311	**A803_66.8 P160 BN160MR4**	312
24.1	3971	2.0	59.8	60900	**A803_59.8 S4 M4LC4**	311	**A803_59.8 P160 BN160MR4**	312
24.2	3960	3.5	59.6	75000	**A903_59.6 S4 M4LC4**	314	**A903_59.6 P160 BN160MR4**	315
25.0	3830	1.3	57.7	50000	**A703_57.7 S4 M4LC4**	308	**A703_57.7 P160 BN160MR4**	309
26.1	3665	2.2	55.2	59900	**A803_55.2 S4 M4LC4**	311	**A803_55.2 P160 BN160MR4**	312
27.1	3536	1.4	53.2	50000	**A703_53.2 S4 M4LC4**	308	**A703_53.2 P160 BN160MR4**	309
29.4	3255	1.5	49.0	50000	**A703_49.0 S4 M4LC4**	308	**A703_49.0 P160 BN160MR4**	309
30	3200	2.5	48.2	58300	**A803_48.2 S4 M4LC4**	311	**A803_48.2 P160 BN160MR4**	312

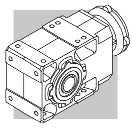

11 kW

n_2 min^{-1}	M_2 Nm	S	i	R_{n2} N			IEC	
32	3004	1.6	45.2	50000	**A703_45.2 S4 M4LC4**	308	**A703_45.2 P160 BN160MR4**	309
32	3001	0.9	45.2	30000	**A603_45.2 S4 M4LC4**	304	**A603_45.2 P160 BN160MR4**	305
32	2954	2.5	44.5	57300	**A803_44.5 S4 M4LC4**	311	**A803_44.5 P160 BN160MR4**	312
35	2771	1.0	41.7	30000	**A603_41.7 S4 M4LC4**	304	**A603_41.7 P160 BN160MR4**	305
37	2557	3.0	38.5	55500			**A803_38.5 P160 BN160MR4**	312
38	2549	1.9	38.4	50000	**A703_38.4 S4 M4LC4**	308	**A703_38.4 P160 BN160MR4**	309
41	2360	3.0	35.5	54500			**A803_35.5 P160 BN160MR4**	312
41	2353	1.9	35.4	50000	**A703_35.4 S4 M4LC4**	308	**A703_35.4 P160 BN160MR4**	309
42	2278	1.2	34.3	30000	**A603_34.3 S4 M4LC4**	304	**A603_34.3 P160 BN160MR4**	305
45	2103	1.3	31.7	30000	**A603_31.7 S4 M4LC4**	304	**A603_31.7 P160 BN160MR4**	305
47	2031	3.2	30.6	52600			**A803_30.6 P160 BN160MR4**	312
48	1999	2.3	30.1	49400			**A703_30.1 P160 BN160MR4**	309
51	1875	3.5	28.2	51600			**A803_28.2 P160 BN160MR4**	312
52	1850	1.5	27.9	30000	**A603_27.9 S4 M4LC4**	304	**A603_27.9 P160 BN160MR4**	305
52	1845	2.3	27.8	48500			**A703_27.8 P160 BN160MR4**	309
56	1708	1.6	25.7	30000	**A603_25.7 S4 M4LC4**	304	**A603_25.7 P160 BN160MR4**	305
60	1597	0.9	24.0	7800	**A503_24.0 S4 M4LC4**	296	**A503_24.0 P160 BN160MR4**	297
61	1562	2.8	23.5	46600			**A703_23.5 P160 BN160MR4**	309
68	1415	2.8	21.3	45500	**A703_21.3 S4 M4LC4**	308	**A703_21.3 P160 BN160MR4**	309
70	1413	1.4	20.6	30000	**A602_20.6 S4 M4LC4**	304	**A602_20.6 P160 BN160MR4**	305
73	1306	2.8	19.7	44500	**A703_19.7 S4 M4LC4**	308	**A703_19.7 P160 BN160MR4**	309
75	1319	1.4	19.2	27900	**A552_19.2 S4 M4LC4**	300	**A552_19.2 P160 BN160MR4**	301
86	1148	1.7	16.7	30000	**A602_16.7 S4 M4LC4**	304	**A602_16.7 P160 BN160MR4**	305
87	1137	1.1	16.6	12000	**A502_16.6 S4 M4LC4**	296	**A502_16.6 P160 BN160MR4**	297
92	1076	1.7	15.7	26600	**A552_15.7 S4 M4LC4**	300	**A552_15.7 P160 BN160MR4**	301
110	899	1.2	13.1	11500	**A502_13.1 S4 M4LC4**	296	**A502_13.1 P160 BN160MR4**	297
110	897	2.0	13.1	25400	**A552_13.1 S4 M4LC4**	300	**A552_13.1 P160 BN160MR4**	301
113	872	2.3	12.7	30000	**A602_12.7 S4 M4LC4**	304	**A602_12.7 P160 BN160MR4**	305
123	779	2.1	23.8	23600	**A553_23.8 S4 M4LC2**	300	**A553_23.8 P160 BN160MR2**	301
139	710	2.5	10.4	24000	**A552_10.4 S4 M4LC4**	300	**A552_10.4 P160 BN160MR4**	301
140	708	2.8	10.3	30000	**A602_10.3 S4 M4LC4**	304	**A602_10.3 P160 BN160MR4**	305
148	668	1.5	9.7	10800	**A502_9.7 S4 M4LC4**	296	**A502_9.7 P160 BN160MR4**	297
170	581	3.1	8.5	22800	**A552_8.5 S4 M4LC4**	300	**A552_8.5 P160 BN160MR4**	301
186	531	1.8	7.7	10300	**A502_7.7 S4 M4LC4**	296	**A502_7.7 P160 BN160MR4**	297
202	489	1.1	7.1	6640	**A412_7.1 S4 M4LC4**	292		
223	443	2.0	13.1	9920	**A502_13.1 S4 M4LC2**	296	**A502_13.1 P160 BN160MR2**	297
248	399	1.0	11.8	4690	**A352_11.8 S4 M4LC2**	288		
275	360	1.1	10.6	4660	**A352_10.6 S4 M4LC2**	288		
317	311	1.7	9.2	6230	**A412_9.2 S4 M4LC2**	292		
377	262	2.8	7.7	8650	**A502_7.7 S4 M4LC2**	296	**A502_7.7 P160 BN160MR2**	297
416	238	1.6	7.0	4440	**A352_7.0 S4 M4LC2**	288		
456	217	1.6	6.4	4380	**A352_6.4 S4 M4LC2**	288		
539	183	1.9	5.4	4250	**A352_5.4 S4 M4LC2**	288		

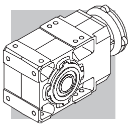

15 kW

n_2 min-1	M_2 Nm	S	i	R_{n2} N			IEC	
8.1	15724	0.9	180.0	75000			**A904_180.0 P160 BN160L4**	315
8.8	14514	1.0	166.1	75000			**A904_166.1 P160 BN160L4**	315
9.7	13490	1.0	151.0	75000	**A903_151.0 S5 M5SB4**	314	**A903_151.0 P160 BN160L4**	315
10.5	12452	1.0	139.4	75000	**A903_139.4 S5 M5SB4**	314	**A903_139.4 P160 BN160L4**	315
11.5	11314	1.2	126.6	75000	**A903_126.6 S5 M5SB4**	314	**A903_126.6 P160 BN160L4**	315
12.5	10443	1.3	116.9	75000	**A903_116.9 S5 M5SB4**	314	**A903_116.9 P160 BN160L4**	315
13.7	9543	1.5	106.8	75000	**A903_106.8 S5 M5SB4**	314	**A903_106.8 P160 BN160L4**	315
14.8	8808	1.6	98.6	75000	**A903_98.6 S5 M5SB4**	314	**A903_98.6 P160 BN160L4**	315
15.2	8578	0.9	96.0	60600	**A803_96.0 S5 M5SB4**	311	**A803_96.0 P160 BN160L4**	312
16.4	7967	1.0	89.2	60400	**A803_89.2 S5 M5SB4**	311	**A803_89.2 P160 BN160L4**	312
16.8	7778	1.8	87.1	75000	**A903_87.1 S5 M5SB4**	314	**A903_87.1 P160 BN160L4**	315
17.7	7354	1.1	82.3	59800	**A803_82.3 S5 M5SB4**	311	**A803_82.3 P160 BN160L4**	312
18.2	7180	1.9	80.4	75000	**A903_80.4 S5 M5SB4**	314	**A903_80.4 P160 BN160L4**	315
19.6	6654	2.1	74.5	75000	**A903_74.5 S5 M5SB4**	314	**A903_74.5 P160 BN160L4**	315
20.2	6465	1.2	72.4	59100	**A803_72.4 S5 M5SB4**	311	**A803_72.4 P160 BN160L4**	312
21.2	6142	2.3	68.8	75000	**A903_68.8 S5 M5SB4**	314	**A903_68.8 P160 BN160L4**	315
21.9	5968	1.3	66.8	58300	**A803_66.8 S5 M5SB4**	311	**A803_66.8 P160 BN160L4**	312
24.4	5340	1.5	59.8	57500	**A803_59.8 S5 M5SB4**	311	**A803_59.8 P160 BN160L4**	312
24.5	5326	2.6	59.6	75000	**A903_59.6 S5 M5SB4**	314	**A903_59.6 P160 BN160L4**	315
25.3	5152	1.0	57.7	50000	**A703_57.7 S5 M5SB4**	308	**A703_57.7 P160 BN160L4**	309
26.5	4930	1.6	55.2	56700	**A803_55.2 S5 M5SB4**	311	**A803_55.2 P160 BN160L4**	312
26.5	4916	2.8	55.0	75000	**A903_55.0 S5 M5SB4**	314	**A903_55.0 P160 BN160L4**	315
27.4	4755	1.1	53.2	50000	**A703_53.2 S5 M5SB4**	308	**A703_53.2 P160 BN160L4**	309
29.8	4377	1.1	49.0	50000	**A703_49.0 S5 M5SB4**	308	**A703_49.0 P160 BN160L4**	309
30	4315	3.2	48.3	74900			**A903_48.3 P160 BN160L4**	315
30	4304	1.9	48.2	55500	**A803_48.2 S5 M5SB4**	311	**A803_48.2 P160 BN160L4**	312
32	4041	1.2	45.2	50000	**A703_45.2 S5 M5SB4**	308	**A703_45.2 P160 BN160L4**	309
33	3983	3.5	44.6	73500			**A903_44.6 P160 BN160L4**	315
33	3973	1.9	44.5	54700	**A803_44.5 S5 M5SB4**	311	**A803_44.5 P160 BN160L4**	312
38	3439	2.2	38.5	53200			**A803_38.5 P160 BN160L4**	312
38	3429	1.4	38.4	49900	**A703_38.4 S5 M5SB4**	308	**A703_38.4 P160 BN160L4**	309
41	3175	2.2	35.5	52300			**A803_35.5 P160 BN160L4**	312
41	3165	1.4	35.4	49100	**A703_35.4 S5 M5SB4**	308	**A703_35.4 P160 BN160L4**	309
43	3064	0.9	34.3	30000	**A603_34.3 S5 M5SB4**	304	**A603_34.3 P160 BN160L4**	305
46	2828	1.0	31.7	30000	**A603_31.7 S5 M5SB4**	304	**A603_31.7 P160 BN160L4**	305
48	2731	2.4	30.6	50800			**A803_30.6 P160 BN160L4**	312
49	2689	1.7	30.1	47600			**A703_30.1 P160 BN160L4**	309
52	2521	2.6	28.2	49900			**A803_28.2 P160 BN160L4**	312
52	2488	1.1	27.9	30000	**A603_27.9 S5 M5SB4**	304	**A603_27.9 P160 BN160L4**	305
53	2482	1.7	27.8	46700			**A703_27.8 P160 BN160L4**	309
57	2297	1.2	25.7	30000	**A603_25.7 S5 M5SB4**	304	**A603_25.7 P160 BN160L4**	305
61	2125	0.9	23.8	25000	**A553_23.8 S5 M5SB4**	300	**A553_23.8 P160 BN160L4**	301
62	2101	2.0	23.5	45100			**A703_23.5 P160 BN160L4**	309
69	1903	2.1	21.3	44100	**A703_21.3 S5 M5SB4**	308	**A703_21.3 P160 BN160L4**	309
70	1871	3.5	20.9	46600	**A803_20.9 S5 M5SB4**	311	**A803_20.9 P160 BN160L4**	312
71	1900	1.1	20.6	30000	**A602_20.6 S5 M5SB4**	304	**A602_20.6 P160 BN160L4**	305
74	1757	2.1	19.7	43300	**A703_19.7 S5 M5SB4**	308	**A703_19.7 P160 BN160L4**	309
75	1728	3.5	19.3	45700	**A803_19.3 S5 M5SB4**	311	**A803_19.3 P160 BN160L4**	312
76	1775	1.0	19.2	26800	**A552_19.2 S5 M5SB4**	300	**A552_19.2 P160 BN160L4**	301
87	1544	1.3	16.7	30000	**A602_16.7 S5 M5SB4**	304	**A602_16.7 P160 BN160L4**	305
87	1491	2.7	16.7	41600	**A703_16.7 S5 M5SB4**	308	**A703_16.7 P160 BN160L4**	309

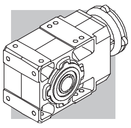

15 kW

n_2 min^{-1}	M_2 Nm	S	i	R_{n2} N	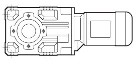		IEC	
93	1447	1.2	15.7	25700	**A552_15.7 S5 M5SB4**	300	**A552_15.7 P160 BN160L4**	301
95	1376	2.7	15.4	40800	**A703_15.4 S5 M5SB4**	308	**A703_15.4 P160 BN160L4**	309
111	1209	0.9	13.1	10500			**A502_13.1 P160 BN160L4**	297
112	1207	1.5	13.1	24700	**A552_13.1 S5 M5SB4**	300	**A552_13.1 P160 BN160L4**	301
112	1169	3.3	13.1	39200			**A703_13.1 P160 BN160L4**	309
115	1172	1.7	12.7	30000	**A602_12.7 S5 M5SB4**	304	**A602_12.7 P160 BN160L4**	305
121	1079	3.3	12.1	38400			**A703_12.1 P160 BN160L4**	309
123	1059	1.5	23.8	22600	**A553_23.8 S5 M5SB4**	300	**A553_23.8 P160 BN160L4**	301
141	956	1.9	10.4	23400	**A552_10.4 S5 M5SB4**	300	**A552_10.4 P160 BN160L4**	301
142	952	2.1	10.3	30000	**A602_10.3 S5 M5SB4**	304	**A602_10.3 P160 BN160L4**	305
150	898	1.1	9.7	10100			**A502_9.7 P160 BN160L4**	297
173	781	2.3	8.5	22200	**A552_8.5 S5 M5SB4**	300	**A552_8.5 P160 BN160L4**	301
186	726	2.8	7.9	28300	**A602_7.9 S5 M5SB4**	304	**A602_7.9 P160 BN160L4**	305
189	714	1.3	7.7	9750		296	**A502_7.7 P160 BN160L4**	297
228	592	2.9	6.4	20700	**A552_6.4 S5 M5SB4**	300	**A552_6.4 P160 BN160L4**	301
295	456	3.5	4.9	19400	**A552_4.9 S5 M5SB4**	300	**A552_4.9 P160 BN160L4**	301
301	448	1.8	9.7	8830			**A502_9.7 P160 BN160MB2**	297
352	383	1.3	8.3	5630			**A412_8.3 P160 BN160MB2**	293
379	356	2.1	7.7	8350			**A502_7.7 P160 BN160MB2**	297

18.5 kW

n_2 min^{-1}	M_2 Nm	S	i	R_{n2} N	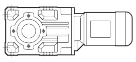		IEC	
11.5	13954	0.9	126.6	75000	**A903_126.6 S5 M5LA4**	314	**A903_126.6 P180 BN180M4**	315
12.5	12880	1.1	116.9	75000	**A903_116.9 S5 M5LA4**	314	**A903_116.9 P180 BN180M4**	315
13.7	11769	1.2	106.8	75000	**A903_106.8 S5 M5LA4**	314	**A903_106.8 P180 BN180M4**	315
14.8	10864	1.3	98.6	75000	**A903_98.6 S5 M5LA4**	314	**A903_98.6 P180 BN180M4**	315
16.8	9593	1.5	87.1	75000	**A903_87.1 S5 M5LA4**	314	**A903_87.1 P180 BN180M4**	315
18.2	8855	1.6	80.4	75000	**A903_80.4 S5 M5LA4**	314	**A903_80.4 P180 BN180M4**	315
19.6	8206	1.7	74.5	75000	**A903_74.5 S5 M5LA4**	314	**A903_74.5 P180 BN180M4**	315
20.2	7973	1.0	72.4	55600	**A803_72.4 S5 M5LA4**	311	**A803_72.4 P180 BN180M4**	312
21.2	7575	1.8	68.8	75000	**A903_68.8 S5 M5LA4**	314	**A903_68.8 P180 BN180M4**	315
21.9	7360	1.1	66.8	55100			**A803_66.8 P180 BN180M4**	312
24.4	6586	1.2	59.8	54700	**A803_59.8 S5 M5LA4**	311	**A803_59.8 P180 BN180M4**	312
24.5	6568	2.1	59.6	75000	**A903_59.6 S5 M5LA4**	314	**A903_59.6 P180 BN180M4**	315
26.5	6080	1.3	55.2	54100	**A803_55.2 S5 M5LA4**	311	**A803_55.2 P180 BN180M4**	312
26.5	6063	2.3	55.0	74900	**A903_55.0 S5 M5LA4**	314	**A903_55.0 P180 BN180M4**	315
29.8	5399	0.9	49.0	49600	**A703_49.0 S5 M5LA4**	308	**A703_49.0 P180 BN180M4**	309
30	5322	2.6	48.3	73100			**A903_48.3 P180 BN180M4**	315
30	5309	1.5	48.2	53200	**A803_48.2 S5 M5LA4**	311	**A803_48.2 P180 BN180M4**	312
32	4983	1.0	45.2	49000	**A703_45.2 S5 M5LA4**	308	**A703_45.2 P180 BN180M4**	309
33	4912	2.9	44.6	71800			**A903_44.6 P180 BN180M4**	315
33	4900	1.5	44.5	52500	**A803_44.5 S5 M5LA4**	311	**A803_44.5 P180 BN180M4**	312
38	4276	3.3	38.8	69700			**A903_38.8 P180 BN180M4**	315
38	4242	1.8	38.5	51400			**A803_38.5 P180 BN180M4**	312
38	4229	1.1	38.4	48000	**A703_38.4 S5 M5LA4**	308	**A703_38.4 P180 BN180M4**	309
41	3947	3.5	35.8	68500			**A903_35.8 P180 BN180M4**	315
41	3916	1.8	35.5	50600			**A803_35.5 P180 BN180M4**	312

18.5 kW

n_2 min^{-1}	M_2 Nm	S	i	R_{n2} N			IEC	
41	3904	1.2	35.4	47300	**A703_35.4 S5 M5LA4**	308	**A703_35.4 P180 BN180M4**	309
48	3369	1.9	30.6	49300			**A803_30.6 P180 BN180M4**	312
49	3316	1.4	30.1	46100			**A703_30.1 P180 BN180M4**	309
52	3110	2.1	28.2	48500			**A803_28.2 P180 BN180M4**	312
52	3069	0.9	27.9	30000	**A603_27.9 S5 M5LA4**	304	**A603_27.9 P180 BN180M4**	305
53	3061	1.4	27.8	45300			**A703_27.8 P180 BN180M4**	309
57	2833	1.0	25.7	30000	**A603_25.7 S5 M5LA4**	304	**A603_25.7 P180 BN180M4**	305
60	2699	2.5	24.5	47200			**A803_24.5 P180 BN180M4**	312
62	2591	1.7	23.5	43900			**A703_23.5 P180 BN180M4**	309
65	2492	2.5	22.6	46300			**A803_22.6 P180 BN180M4**	312
69	2347	1.7	21.3	43000	**A703_21.3 S5 M5LA4**	308	**A703_21.3 P180 BN180M4**	309
70	2308	2.8	20.9	45600	**A803_20.9 S5 M5LA4**	311	**A803_20.9 P180 BN180M4**	312
74	2167	1.7	19.7	42300	**A703_19.7 S5 M5LA4**	308	**A703_19.7 P180 BN180M4**	309
75	2131	2.8	19.3	44800	**A803_19.3 S5 M5LA4**	311	**A803_19.3 P180 BN180M4**	312
87	1905	1.0	16.7	30000	**A602_16.7 S5 M5LA4**	304	**A602_16.7 P180 BN180M4**	305
87	1839	2.2	16.7	40800	**A703_16.7 S5 M5LA4**	308	**A703_16.7 P180 BN180M4**	309
93	1785	1.0	15.7	25000	**A552_15.7 S5 M5LA4**	300	**A552_15.7 P180 BN180M4**	301
95	1697	2.2	15.4	40100	**A703_15.4 S5 M5LA4**	308	**A703_15.4 P180 BN180M4**	309
112	1488	1.2	13.1	24100	**A552_13.1 S5 M5LA4**	300	**A552_13.1 P180 BN180M4**	301
112	1442	2.7	13.1	38600			**A703_13.1 P180 BN180M4**	309
115	1446	1.4	12.7	30000	**A602_12.7 S5 M5LA4**	304	**A602_12.7 P180 BN180M4**	305
121	1331	2.7	12.1	37800			**A703_12.1 P180 BN180M4**	309
123	1306	1.2	23.8	21600	**A553_23.8 S5 M5SC2**	300	**A553_23.8 P160 BN160L2**	301
141	1179	1.5	10.4	22900	**A552_10.4 S5 M5LA4**	300	**A552_10.4 P180 BN180M4**	301
142	1174	1.7	10.3	29900	**A602_10.3 S5 M5LA4**	304	**A602_10.3 P180 BN180M4**	305
143	1127	2.9	10.2	36300			**A703_10.2 P180 BN180M4**	309
150	1108	0.9	9.7	9530	**A502_9.7 S5 M5LA4**	296	**A502_9.7 P180 BN180M4**	297
155	1040	2.9	9.4	35600			**A703_9.4 P180 BN180M4**	309
173	963	1.9	8.5	21900	**A552_8.5 S5 M5LA4**	300	**A552_8.5 P180 BN180M4**	301
186	895	2.2	7.9	27900	**A602_7.9 S5 M5LA4**	304	**A602_7.9 P180 BN180M4**	305
189	881	1.1	7.7	9260			**A502_7.7 P180 BN180M4**	297
228	730	2.3	6.4	20400	**A552_6.4 S5 M5LA4**	300	**A552_6.4 P180 BN180M4**	301
295	563	2.8	4.9	19100	**A552_4.9 S5 M5LA4**	300	**A552_4.9 P180 BN180M4**	301
379	439	1.7	7.7	8100			**A502_7.7 P160 BN160L2**	297

22 kW

n_2 min^{-1}	M_2 Nm	S	i	R_{n2} N			IEC	
12.5	15317	0.9	116.9	75000			**A903_116.9 P180 BN180L4**	315
13.7	13996	1.0	106.8	75000			**A903_106.8 P180 BN180L4**	315
14.8	12919	1.1	98.6	75000			**A903_98.6 P180 BN180L4**	315
16.8	11408	1.2	87.1	75000			**A903_87.1 P180 BN180L4**	315
18.2	10530	1.3	80.4	75000			**A903_80.4 P180 BN180L4**	315
19.6	9758	1.4	74.5	75000			**A903_74.5 P180 BN180L4**	315
21.2	9008	1.6	68.8	75000			**A903_68.8 P180 BN180L4**	315
21.9	8753	0.9	66.8	51900			**A803_66.8 P180 BN180L4**	312
24.4	7832	1.0	59.8	51800			**A803_59.8 P180 BN180L4**	312
24.5	7811	1.8	59.6	73800			**A903_59.6 P180 BN180L4**	315

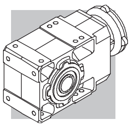

22 kW

n_2 min-1	M_2 Nm	S	i	R_{n2} N	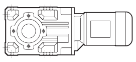			
26.5	7230	1.1	55.2	51400			**A803_55.2 P180 BN180L4**	312
26.5	7210	1.9	55.0	72700			**A903_55.0 P180 BN180L4**	315
30	6328	2.2	48.3	71100			**A903_48.3 P180 BN180L4**	315
30	6313	1.3	48.2	50900			**A803_48.2 P180 BN180L4**	312
33	5842	2.4	44.6	70000			**A903_44.6 P180 BN180L4**	315
33	5827	1.3	44.5	50300			**A803_44.5 P180 BN180L4**	312
38	5085	2.8	38.8	68100			**A903_38.8 P180 BN180L4**	315
38	5044	1.5	38.5	49500			**A803_38.5 P180 BN180L4**	312
38	5029	1.0	38.4	46000			**A703_38.4 P180 BN180L4**	309
41	4694	2.9	35.8	67000			**A903_35.8 P180 BN180L4**	315
41	4656	1.5	35.5	48900			**A803_35.5 P180 BN180L4**	312
41	4642	1.0	35.4	45500			**A703_35.4 P180 BN180L4**	309
46	4127	3.4	31.5	65200			**A903_31.5 P180 BN180L4**	315
48	4006	1.6	30.6	47800			**A803_30.6 P180 BN180L4**	312
49	3944	1.2	30.1	44500			**A703_30.1 P180 BN180L4**	309
50	3810	3.4	29.1	64000			**A903_29.1 P180 BN180L4**	315
52	3698	1.8	28.2	47100			**A803_28.2 P180 BN180L4**	312
53	3640	1.2	27.8	43900			**A703_27.8 P180 BN180L4**	309
60	3210	2.1	24.5	45900			**A803_24.5 P180 BN180L4**	312
62	3082	1.4	23.5	42700			**A703_23.5 P180 BN180L4**	309
65	2963	2.1	22.6	45200			**A803_22.6 P180 BN180L4**	312
69	2791	1.4	21.3	41900			**A703_21.3 P180 BN180L4**	309
70	2745	2.4	20.9	44600			**A803_20.9 P180 BN180L4**	312
74	2577	1.4	19.7	41200			**A703_19.7 P180 BN180L4**	309
75	2534	2.4	19.3	43800			**A803_19.3 P180 BN180L4**	312
87	2193	3.0	16.7	42500			**A803_16.7 P180 BN180L4**	312
87	2187	1.8	16.7	39900			**A703_16.7 P180 BN180L4**	309
94	2024	3.0	15.5	41700			**A803_15.5 P180 BN180L4**	312
95	2018	1.8	15.4	39200			**A703_15.4 P180 BN180L4**	309
112	1770	1.0	13.1	23500			**A552_13.1 P180 BN180L4**	301
112	1715	2.2	13.1	37900			**A703_13.1 P180 BN180L4**	309
115	1719	1.2	12.7	30000			**A602_12.7 P180 BN180L4**	305
121	1583	2.2	12.1	37200			**A703_12.1 P180 BN180L4**	309
123	1553	1.0	23.8	20900	**A553_23.8 S5 M5LA2**	300	**A553_23.8 P180 BN180M2**	301
141	1401	1.3	10.4	22400			**A552_10.4 P180 BN180L4**	301
142	1396	1.4	10.3	29300			**A602_10.3 P180 BN180L4**	305
143	1340	2.4	10.2	35800			**A703_10.2 P180 BN180L4**	309
155	1237	2.4	9.4	35100			**A703_9.4 P180 BN180L4**	309
173	1145	1.6	8.5	21400			**A552_8.5 P180 BN180L4**	301
186	1064	1.9	7.9	27500			**A602_7.9 P180 BN180L4**	305
189	1047	0.9	7.7	8760			**A502_7.7 P180 BN180L4**	297
228	868	2.0	6.4	20100			**A552_6.4 P180 BN180L4**	301
283	698	2.6	10.4	19100	**A552_10.4 S5 M5LA2**	300	**A552_10.4 P180 BN180M2**	301
295	669	2.4	4.9	18900			**A552_4.9 P180 BN180L4**	301
346	571	3.0	8.5	18200	**A552_8.5 S5 M5LA2**	300	**A552_8.5 P180 BN180M2**	301
379	522	1.4	7.7	7860			**A502_7.7 P180 BN180M2**	297

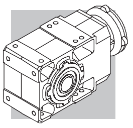

30 kW

n_2 min^{-1}	M_2 Nm	S	i	R_{n2} N			IEC	
16.8	15556	0.9	87.1	70100			**A903_87.1 P200 BN200L4**	315
18.2	14360	1.0	80.4	70000			**A903_80.4 P200 BN200L4**	315
19.6	13307	1.1	74.5	69700			**A903_74.5 P200 BN200L4**	315
21.2	12283	1.1	68.8	69200			**A903_68.8 P200 BN200L4**	315
24.5	10651	1.3	59.6	68500			**A903_59.6 P200 BN200L4**	315
26.5	9832	1.4	55.0	67800			**A903_55.0 P200 BN200L4**	315
30.0	8630	1.6	48.3	66900			**A903_48.3 P200 BN200L4**	315
30	8609	0.9	48.2	45700			**A803_48.2 P200 BN200L4**	312
33	7966	1.8	44.6	66000			**A903_44.6 P200 BN200L4**	315
33	7946	0.9	44.5	45500			**A803_44.5 P200 BN200L4**	312
38	6934	2.0	38.8	64700			**A903_38.8 P200 BN200L4**	315
38	6879	1.1	38.5	45300			**A803_38.5 P200 BN200L4**	312
41	6400	2.1	35.8	63800			**A903_35.8 P200 BN200L4**	315
41	6349	1.1	35.5	45000			**A803_35.5 P200 BN200L4**	312
46	5628	2.5	31.5	62400			**A903_31.5 P200 BN200L4**	315
48	5463	1.2	30.6	44500			**A803_30.6 P200 BN200L4**	312
50	5195	2.5	29.1	61400			**A903_29.1 P200 BN200L4**	315
52	5043	1.3	28.2	44000			**A803_28.2 P200 BN200L4**	312
60	4377	1.5	24.5	43300			**A803_24.5 P200 BN200L4**	312
61	4307	3.1	24.1	59200			**A903_24.1 P200 BN200L4**	315
62	4202	1.0	23.5	40100			**A703_23.5 P200 BN200L4**	309
65	4041	1.5	22.6	42700			**A803_22.6 P200 BN200L4**	312
66	3976	3.1	22.3	58200			**A903_22.3 P200 BN200L4**	315
70	3752	3.3	21.0	57500			**A903_21.0 P200 BN200L4**	315
70	3743	1.7	20.9	42300			**A803_20.9 P200 BN200L4**	312
75	3463	3.3	19.4	56500			**A903_19.4 P200 BN200L4**	315
75	3455	1.8	19.3	41700			**A803_19.3 P200 BN200L4**	312
87	2991	2.2	16.7	40700			**A803_16.7 P200 BN200L4**	312
87	2982	1.3	16.7	38100			**A703_16.7 P200 BN200L4**	309
94	2761	2.2	15.5	40000			**A803_15.5 P200 BN200L4**	312
95	2752	1.3	15.4	37500			**A703_15.4 P200 BN200L4**	309
110	2375	2.8	13.3	38900			**A803_13.3 P200 BN200L4**	312
112	2338	1.6	13.1	36400			**A703_13.1 P200 BN200L4**	309
119	2192	2.8	12.3	38200			**A803_12.3 P200 BN200L4**	312
121	2158	1.6	12.1	35800			**A703_12.1 P200 BN200L4**	309
125	2094	1.7	23.5	35600			**A703_23.5 P200 BN200LA2**	309
137	1903	3.4	10.7	37100			**A803_10.7 P200 BN200L4**	312
143	1827	1.8	10.2	34600			**A703_10.2 P200 BN200L4**	309
148	1757	3.4	9.8	36500			**A803_9.8 P200 BN200L4**	312
155	1687	1.8	9.4	34000			**A703_9.4 P200 BN200L4**	309
176	1486	2.3	16.7	33100			**A703_16.7 P200 BN200LA2**	309
190	1371	2.3	15.4	32500			**A703_15.4 P200 BN200LA2**	309
224	1165	2.7	13.1	31300			**A703_13.1 P200 BN200LA2**	309
243	1075	2.7	12.1	30600			**A703_12.1 P200 BN200LA2**	309
287	910	3.2	10.2	29400			**A703_10.2 P200 BN200LA2**	309
310	840	3.2	9.4	28800			**A703_9.4 P200 BN200LA2**	309

37 kW

n_2 min-1	M_2 Nm	S	i	R_{n2} N			IEC (*)	
21.5	14945	0.9	68.8	63900			**A903_68.8 P225 IEC225S4**	315
24.8	12959	1.1	59.6	63900			**A903_59.6 P225 IEC225S4**	315
26.9	11962	1.2	55.0	63600			**A903_55.0 P225 IEC225S4**	315
31	10499	1.3	48.3	63100			**A903_48.3 P225 IEC225S4**	315
33	9692	1.4	44.6	62500			**A903_44.6 P225 IEC225S4**	315
38	8436	1.7	38.8	61700			**A903_38.8 P225 IEC225S4**	315
38	8369	0.9	38.5	41700			**A803_38.5 P225 IEC225S4**	312
41	7787	1.8	35.8	61000			**A903_35.8 P225 IEC225S4**	315
42	7725	0.9	35.5	41600			**A803_35.5 P225 IEC225S4**	312
47	6847	2.0	31.5	59900			**A903_31.5 P225 IEC225S4**	315
48	6647	1.0	30.6	41600			**A803_30.6 P225 IEC225S4**	312
51	6321	2.1	29.1	59100			**A903_29.1 P225 IEC225S4**	315
52	6135	1.1	28.2	41300			**A803_28.2 P225 IEC225S4**	312
60	5326	1.3	24.5	40900			**A803_24.5 P225 IEC225S4**	312
61	5241	2.5	24.1	57300			**A903_24.1 P225 IEC225S4**	315
65	4916	1.3	22.6	40500			**A803_22.6 P225 IEC225S4**	312
67	4837	2.5	22.3	56400			**A903_22.3 P225 IEC225S4**	315
70	4565	2.7	21.0	55900			**A903_21.0 P225 IEC225S4**	315
71	4554	1.4	20.9	40300			**A803_20.9 P225 IEC225S4**	312
76	4214	2.7	19.4	54900			**A903_19.4 P225 IEC225S4**	315
77	4204	1.4	19.3	39800			**A803_19.3 P225 IEC225S4**	312
88	3668	3.2	16.9	53400			**A903_16.9 P225 IEC225S4**	315
88	3639	1.8	16.7	39100			**A803_16.7 P225 IEC225S4**	312
95	3386	3.2	15.6	52500			**A903_15.6 P225 IEC225S4**	315
96	3359	1.8	15.5	38500			**A803_15.5 P225 IEC225S4**	312
111	2890	2.3	13.3	37600			**A803_13.3 P225 IEC225S4**	312
121	2667	2.3	12.3	37000			**A803_12.3 P225 IEC225S4**	312
139	2316	2.8	10.7	36100			**A803_10.7 P225 IEC225S4**	312
151	2137	2.8	9.8	35500			**A803_9.8 P225 IEC225S4**	312

45 kW

n_2 min-1	M_2 Nm	S	i	R_{n2} N			IEC (*)	
26.9	14549	1.0	55.0	58700			**A903_55.0 P225 IEC225M4**	315
31	12769	1.1	48.3	58900			**A903_48.3 P225 IEC225M4**	315
33	11787	1.2	44.6	58600			**A903_44.6 P225 IEC225M4**	315
38	10260	1.4	38.8	58300			**A903_38.8 P225 IEC225M4**	315
41	9471	1.5	35.8	57800			**A903_35.8 P225 IEC225M4**	315
47	8328	1.7	31.5	57200			**A903_31.5 P225 IEC225M4**	315
51	7687	1.7	29.1	56600			**A903_29.1 P225 IEC225M4**	315
60	6477	1.0	24.5	38300			**A803_24.5 P225 IEC225M4**	312
61	6374	2.1	24.1	55200			**A903_24.1 P225 IEC225M4**	315
65	5979	1.0	22.6	38100			**A803_22.6 P225 IEC225M4**	312
67	5883	2.1	22.3	54500			**A903_22.3 P225 IEC225M4**	315
70	5552	2.2	21.0	54000			**A903_21.0 P225 IEC225M4**	315
71	5539	1.2	20.9	38000			**A803_20.9 P225 IEC225M4**	312
76	5125	2.3	19.4	53200			**A903_19.4 P225 IEC225M4**	315
77	5112	1.2	19.3	37700			**A803_19.3 P225 IEC225M4**	312

***Die technischen Daten müssen als Anhaltswert betrachtet werden, die genaue Konfiguration muss mit den Daten der Motorenlieferanten für Motoren mit Leistungen größer als 30kW abgestimmt werden.**

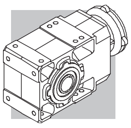

45 kW

n_2 min^{-1}	M_2 Nm	S	i	R_{n2} N			IEC (*)	
88	4461	2.7	16.9	52000			**A903_16.9 P225 IEC225M4**	315
88	4425	1.5	16.7	37300			**A803_16.7 P225 IEC225M4**	312
95	4118	2.7	15.6	51100			**A903_15.6 P225 IEC225M4**	315
96	4085	1.5	15.5	36900			**A803_15.5 P225 IEC225M4**	312
108	3621	3.1	13.7	49900			**A903_13.7 P225 IEC225M4**	315
111	3515	1.9	13.3	36200			**A803_13.3 P225 IEC225M4**	312
117	3342	3.1	12.6	49000			**A903_12.6 P225 IEC225M4**	315
121	3244	1.9	12.3	35700			**A803_12.3 P225 IEC225M4**	312
139	2816	2.3	10.7	34900			**A803_10.7 P225 IEC225M4**	312
141	2771	3.5	10.5	47100			**A903_10.5 P225 IEC225M4**	315
151	2600	2.3	9.8	34400			**A803_9.8 P225 IEC225M4**	312
153	2558	3.5	9.7	46200			**A903_9.7 P225 IEC225M4**	315

55 kW

n_2 min^{-1}	M_2 Nm	S	i	R_{n2} N			IEC (*)	
33	14406	1.0	44.6	53900			**A903_44.6 P250 IEC250M4**	315
38	12540	1.1	38.8	54100			**A903_38.8 P250 IEC250M4**	315
41	11575	1.2	35.8	54000			**A903_35.8 P250 IEC250M4**	315
47	10179	1.4	31.5	53800			**A903_31.5 P250 IEC250M4**	315
51	9396	1.4	29.1	53400			**A903_29.1 P250 IEC250M4**	315
61	7790	1.7	24.1	52600			**A903_24.1 P250 IEC250M4**	315
67	7191	1.7	22.3	52000			**A903_22.3 P250 IEC250M4**	315
70	6786	1.8	21.0	51700			**A903_21.0 P250 IEC250M4**	315
76	6264	1.8	19.4	51100			**A903_19.4 P250 IEC250M4**	315
88	5452	2.2	16.9	50100			**A903_16.9 P250 IEC250M4**	315
95	5033	2.2	15.6	49400			**A903_15.6 P250 IEC250M4**	315
108	4425	2.5	13.7	48400			**A903_13.7 P250 IEC250M4**	315
117	4085	2.6	12.6	47600			**A903_12.6 P250 IEC250M4**	315
141	3387	2.9	10.5	45900			**A903_10.5 P250 IEC250M4**	315
153	3126	2.9	9.7	45100			**A903_9.7 P250 IEC250M4**	315

***Die technischen Daten müssen als Anhaltswert betrachtet werden, die genaue Konfiguration muss mit den Daten der Motorenlieferanten für Motoren mit Leistungen größer als 30kW abgestimmt werden.**

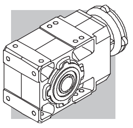

A 10 150 Nm

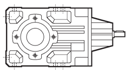	i	n_1 = 2800 min^{-1}					n_1 = 1400 min^{-1}					
		n_2 min^{-1}	M_{n2} Nm	P_{n1} kW	R_{n1} N	R_{n2} N	n_2 min^{-1}	M_{n2} Nm	P_{n1} kW	R_{n1} N	R_{n2} N	
A 10 2_5.5	5.5	512	73	4.2	—	1830	256	73	2.1	960	2460	277
A 10 2_6.3	6.3	442	80	3.9	—	1900	221	80	2.0	830	2560	
A 10 2_7.2	7.2	388	92	4.0	—	1910	194	93	2.0	630	2600	
A 10 2_8.5	8.5	329	92	3.4	—	2060	164	93	1.7	720	2790	
A 10 2_9.6	9.6	291	102	3.3	—	2090	146	128	2.1	—	2650	
A 10 2_10.6	10.6	265	125	3.7	540	2010	133	150	2.2	810	2590	
A 10 2_12.3	12.3	228	110	2.8	—	2280	114	138	1.7	—	2880	
A 10 2_13.9	13.9	201	135	3.0	620	2220	101	150	1.7	1080	2960	
A 10 2_16.4	16.4	170	140	2.7	610	2370	85	150	1.4	1140	3200	
A 10 2_18.6	18.6	151	147	2.5	650	2460	75	150	1.3	1180	3380	
A 10 2_21.4	21.4	131	150	2.2	650	2610	66	150	1.1	1200	3600	
A 10 2_23.8	23.8	118	150	2.0	750	2750	59	150	0.98	1220	3780	
A 10 2_25.5	25.5	110	150	1.8	750	2840	55	150	0.92	1220	3900	
A 10 2_28.6	28.6	98	150	1.6	830	3000	49	150	0.82	1250	4100	
A 10 2_32.2	32.2	87	150	1.5	880	3170	43	150	0.73	1270	4310	
A 10 2_35.1	35.1	80	150	1.3	880	3300	40	150	0.67	1270	4470	
A 10 2_40.9	40.9	69	150	1.1	910	3530	34	150	0.57	1300	4770	
A 10 2_45.4	45.4	62	150	1.0	910	3700	31	150	0.52	1300	4980	
A 10 2_51.3	51.3	55	150	0.91	910	3910	27.3	150	0.46	1290	5240	
A 10 2_58.6	58.6	48	150	0.80	920	4140	23.9	150	0.40	1300	5500	
A 10 2_65.9	65.9	42	150	0.71	920	4360	21.2	150	0.35	1300	5500	
A 10 2_76.4	76.4	37	150	0.61	930	4640	18.3	150	0.31	1300	5500	
A 10 2_91.6	91.6	31	130	0.44	1020	5160	15.3	130	0.22	1300	5500	

(—) Nehmen Sie bitte Kontakt mit unserem technischen Service auf und benennen die Querkraftsdaten (Drehrichtung, Orientierung, Anordnung)

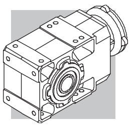

A 10 150 Nm

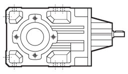	i	n_1 = 900 min^{-1}					n_1 = 500 min^{-1}					
		n_2 min^{-1}	M_{n2} Nm	P_{n1} kW	R_{n1} N	R_{n2} N	n_2 min^{-1}	M_{n2} Nm	P_{n1} kW	R_{n1} N	R_{n2} N	
A 10 2_5.5	5.5	165	73	1.3	1300	2950	91	73	0.74	1300	3720	277
A 10 2_6.3	6.3	142	80	1.3	1300	3070	79	80	0.70	1300	4100	
A 10 2_7.2	7.2	125	93	1.3	1160	3130	69	93	0.72	1300	3970	
A 10 2_8.5	8.5	106	95	1.1	1200	3330	59	110	0.72	1300	4100	
A 10 2_9.6	9.6	94	128	1.3	500	3230	52	128	0.74	1300	4160	
A 10 2_10.6	10.6	85	150	1.4	1300	3200	47	150	0.79	1300	4160	
A 10 2_12.3	12.3	73	150	1.2	180	3420	41	150	0.68	1030	4430	
A 10 2_13.9	13.9	65	150	1.1	1300	3630	36	150	0.60	1300	4680	
A 10 2_16.4	16.4	55	150	0.91	1300	3900	30	150	0.51	1300	5010	
A 10 2_18.6	18.6	48	150	0.81	1300	4120	26.9	150	0.45	1300	5270	
A 10 2_21.4	21.4	42	150	0.70	1300	4370	23.4	150	0.39	1300	5500	
A 10 2_23.8	23.8	38	150	0.63	1300	4570	21.0	150	0.35	1300	5500	
A 10 2_25.5	25.5	35	150	0.59	1300	4710	19.6	150	0.33	1300	5500	
A 10 2_28.6	28.6	31	150	0.53	1300	4940	17.5	150	0.29	1300	5500	
A 10 2_32.2	32.2	28.0	150	0.47	1300	5190	15.5	150	0.26	1300	5500	
A 10 2_35.1	35.1	25.6	150	0.43	1300	5380	14.2	150	0.24	1300	5500	
A 10 2_40.9	40.9	22.0	150	0.37	1300	5500	12.2	150	0.20	1300	5500	
A 10 2_45.4	45.4	19.8	150	0.33	1300	5500	11.0	150	0.18	1300	5500	
A 10 2_51.3	51.3	17.6	150	0.29	1300	5500	9.8	150	0.16	1300	5500	
A 10 2_58.6	58.6	15.4	150	0.26	1300	5500	8.5	150	0.14	1300	5500	
A 10 2_65.9	65.9	13.7	150	0.23	1300	5500	7.6	150	0.13	1300	5500	
A 10 2_76.4	76.4	11.8	150	0.20	1300	5500	6.5	150	0.11	1300	5500	
A 10 2_91.6	91.6	9.8	130	0.14	1300	5500	5.5	130	0.08	1300	5500	

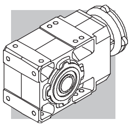

A 20 250 Nm

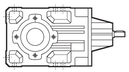	i	n_1 = 2800 min^{-1}					n_1 = 1400 min^{-1}					
		n_2 min^{-1}	M_{n2} Nm	P_{n1} kW	R_{n1} N	R_{n2} N	n_2 min^{-1}	M_{n2} Nm	P_{n1} kW	R_{n1} N	R_{n2} N	
A 20 2_5.4	5.4	523	96	5.6	610	1910	262	121	3.5	770	2400	281
A 20 2_6.5	6.5	428	107	5.1	490	2010	214	135	3.2	610	2530	
A 20 2_7.3	7.3	384	113	4.8	510	2070	192	143	3.1	630	2600	
A 20 2_8.4	8.4	334	116	4.3	510	2180	167	146	2.7	650	2750	
A 20 2_9.4	9.4	299	122	4.1	530	2260	149	154	2.6	660	2840	
A 20 2_10.3	10.3	271	183	5.5	650	1970	135	225	3.4	890	2520	
A 20 2_12.0	12.0	234	128	3.3	550	2280	117	161	2.1	690	3120	
A 20 2_14.1	14.1	199	199	4.4	750	2210	99	245	2.7	960	2820	
A 20 2_16.2	16.2	173	209	4.0	700	2310	87	250	2.4	1040	2990	
A 20 2_18.1	18.1	155	216	3.7	760	2400	77	250	2.2	1210	3170	
A 20 2_21.2	21.2	132	226	3.3	710	2540	66	250	1.8	1290	3430	
A 20 2_23.1	23.1	121	232	3.1	710	2620	61	250	1.7	1360	3580	
A 20 2_26.5	26.5	106	241	2.8	660	2750	53	250	1.5	1410	3820	
A 20 2_29.2	29.2	96	249	2.7	670	2850	48	250	1.3	1510	4000	
A 20 2_31.3	31.3	89	250	2.5	660	2940	45	250	1.2	1510	4130	
A 20 2_35.4	35.4	79	250	2.2	800	3140	40	250	1.1	1650	4380	
A 20 2_39.6	39.6	71	250	2.0	880	3320	35	250	0.98	1710	4600	
A 20 2_43.2	43.2	65	250	1.8	880	3460	32	250	0.90	1710	4790	
A 20 2_48.3	48.3	58	250	1.6	920	3650	29.0	250	0.81	1720	5030	
A 20 2_53.7	53.7	52	250	1.5	920	3840	26.1	250	0.73	1720	5270	
A 20 2_63.1	63.1	44	245	1.2	1040	4180	22.2	245	0.61	1740	5680	
A 20 2_71.0	71.0	39	210	0.92	1360	4640	19.7	210	0.46	1790	6200	
A 20 2_79.9	79.9	35	210	0.82	1360	4880	17.5	210	0.41	1790	6200	
A 20 2_92.3	92.3	30	200	0.68	1380	5250	15.2	200	0.34	1810	6200	
A 20 3_109.2	109.2	25.6	165	0.49	1180	5900	12.8	205	0.30	1300	6200	
A 20 3_120.5	120.5	23.2	168	0.45	1130	6110	11.6	210	0.28	1300	6200	
A 20 3_129.1	129.1	21.7	175	0.44	1210	6200	10.8	215	0.27	1300	6200	
A 20 3_146.1	146.1	19.2	183	0.40	1160	6200	9.6	230	0.25	1300	6200	
A 20 3_163.4	163.4	17.1	190	0.37	1240	6200	8.6	235	0.23	1300	6200	
A 20 3_178.3	178.3	15.7	195	0.35	1200	6200	7.9	245	0.22	1300	6200	
A 20 3_199.2	199.2	14.1	200	0.32	1270	6200	7.0	250	0.20	1300	6200	
A 20 3_221.3	221.3	12.7	203	0.30	1240	6200	6.3	250	0.18	1300	6200	
A 20 3_260.5	260.5	10.8	214	0.26	1270	6200	5.4	250	0.15	1300	6200	
A 20 3_292.8	292.8	9.6	218	0.24	1300	6200	4.8	250	0.14	1300	6200	
A 20 3_329.4	329.4	8.5	221	0.22	1300	6200	4.3	250	0.12	1300	6200	
A 20 3_380.9	380.9	7.4	226	0.19	1300	6200	3.7	250	0.11	1300	6200	

A 20 250 Nm

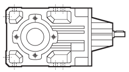	i	$n_1 = 900$ min^{-1}					$n_1 = 500$ min^{-1}					
		n_2 min^{-1}	M_{n2} Nm	P_{n1} kW	R_{n1} N	R_{n2} N	n_2 min^{-1}	M_{n2} Nm	P_{n1} kW	R_{n1} N	R_{n2} N	
A 20 2_5.4	5.4	168	140	2.6	900	2780	93	170	1.8	1100	3390	281
A 20 2_6.5	6.5	138	156	2.4	720	2930	76	190	1.6	860	3570	
A 20 2_7.3	7.3	123	165	2.3	740	3020	69	201	1.5	890	3670	
A 20 2_8.4	8.4	108	170	2.0	730	3180	60	206	1.4	910	3870	
A 20 2_9.4	9.4	96	179	1.9	760	3290	53	210	1.2	1090	4050	
A 20 2_10.3	10.3	87	250	2.4	1190	2990	48	250	1.3	2200	3980	
A 20 2_12.0	12.0	75	187	1.6	790	2990	42	210	0.98	1336	4510	
A 20 2_14.1	14.1	64	250	1.8	1610	3490	36	250	0.99	2200	4590	
A 20 2_16.2	16.2	56	250	1.6	1690	3730	31	250	0.86	2200	4880	
A 20 2_18.1	18.1	50	250	1.4	1860	3930	27.6	250	0.77	2200	5140	
A 20 2_21.2	21.2	42	250	1.2	1940	4230	23.6	250	0.66	2200	5500	
A 20 2_23.1	23.1	39	250	1.1	1970	4400	21.6	250	0.60	2200	5710	
A 20 2_26.5	26.5	34	250	0.95	1980	4680	18.9	250	0.53	2200	6050	
A 20 2_29.2	29.2	31	250	0.86	2000	4890	17.1	250	0.48	2200	6200	
A 20 2_31.3	31.3	28.7	250	0.80	2000	5040	16.0	250	0.44	2200	6200	
A 20 2_35.4	35.4	25.4	250	0.71	2020	5330	14.1	250	0.39	2200	6200	
A 20 2_39.6	39.6	22.7	250	0.63	2040	5590	12.6	250	0.35	2200	6200	
A 20 2_43.2	43.2	20.8	250	0.58	2040	5800	11.6	250	0.32	2200	6200	
A 20 2_48.3	48.3	18.6	250	0.52	2040	6080	10.4	250	0.29	2200	6200	
A 20 2_53.7	53.7	16.8	250	0.47	2050	6200	9.3	250	0.26	2200	6200	
A 20 2_63.1	63.1	14.3	245	0.39	2060	6200	7.9	245	0.22	2200	6200	
A 20 2_71.0	71.0	12.7	210	0.30	2120	6200	7.0	210	0.16	2200	6200	
A 20 2_79.9	79.9	11.3	210	0.26	2120	6200	6.3	210	0.15	2200	6200	
A 20 2_92.3	92.3	9.7	200	0.22	2140	6200	5.4	200	0.12	2200	6200	
A 20 3_109.2	109.2	8.2	240	0.23	1300	6200	4.6	250	0.13	1300	6200	
A 20 3_120.5	120.5	7.5	245	0.21	1300	6200	4.1	250	0.12	1300	6200	
A 20 3_129.1	129.1	7.0	250	0.20	1300	6200	3.9	250	0.11	1300	6200	
A 20 3_146.1	146.1	6.2	250	0.18	1300	6200	3.4	250	0.10	1300	6200	
A 20 3_163.4	163.4	5.5	250	0.16	1300	6200	3.1	250	0.09	1300	6200	
A 20 3_178.3	178.3	5.0	250	0.15	1300	6200	2.8	250	0.08	1300	6200	
A 20 3_199.2	199.2	4.5	250	0.13	1300	6200	2.5	250	0.07	1300	6200	
A 20 3_221.3	221.3	4.1	250	0.12	1300	6200	2.3	250	0.06	1300	6200	
A 20 3_260.5	260.5	3.5	250	0.10	1300	6200	1.9	250	0.06	1300	6200	
A 20 3_292.8	292.8	3.1	250	0.09	1300	6200	1.7	250	0.05	1300	6200	
A 20 3_329.4	329.4	2.7	250	0.08	1300	6200	1.5	250	0.04	1300	6200	
A 20 3_380.9	380.9	2.4	250	0.07	1300	6200	1.3	250	0.04	1300	6200	

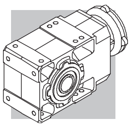

A 30 410 Nm

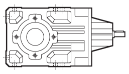	i	n_1 = 2800 min-1					n_1 = 1400 min-1					
		n_2 min-1	M_{n2} Nm	P_{n1} kW	R_{n1} N	R_{n2} N	n_2 min-1	M_{n2} Nm	P_{n1} kW	R_{n1} N	R_{n2} N	
A 30 2_5.4	5.4	517	175	10.1	1130	2480	259	220	6.3	1430	3130	285
A 30 2_6.4	6.4	437	185	9.0	1120	2630	218	230	5.6	1470	3330	
A 30 2_7.0	7.0	399	194	8.6	1140	2690	199	245	5.4	1430	3380	
A 30 2_8.5	8.5	331	200	7.4	1220	2900	165	250	4.6	1570	3660	
A 30 2_9.3	9.3	301	214	7.2	1140	2950	150	270	4.5	1440	3710	
A 30 2_10.5	10.5	268	278	8.3	1800	2770	134	340	5.1	2200	3550	
A 30 2_11.8	11.8	238	230	6.1	1130	3200	119	290	3.8	1420	4030	
A 30 2_13.6	13.6	206	301	6.9	1830	3030	103	370	4.3	2200	3870	
A 30 2_16.3	16.3	171	318	6.1	1830	3240	86	385	3.7	2200	4170	
A 30 2_18.0	18.0	156	327	5.7	1840	3350	78	400	3.5	2200	4290	
A 30 2_20.5	20.5	136	340	5.2	1830	3510	68	410	3.1	2200	4530	
A 30 2_22.8	22.8	123	351	4.8	1850	3640	62	410	2.8	2200	4770	
A 30 2_26.5	26.5	106	367	4.3	1840	3850	53	410	2.4	2200	5150	
A 30 2_29.3	29.3	96	378	4.0	1847	3980	48	410	2.2	2200	5400	
A 30 2_33.4	33.4	84	393	3.7	1840	4170	42	410	1.9	2200	5750	
A 30 2_36.6	36.6	76	404	3.4	1840	4310	38	410	1.7	2200	6010	
A 30 2_39.3	39.3	71	410	3.3	1810	4430	36	410	1.6	2200	6200	
A 30 2_43.4	43.4	64	410	2.9	1850	4660	32	410	1.5	2200	6490	
A 30 2_48.3	48.3	58	410	2.6	1860	4920	29.0	410	1.3	2200	6810	
A 30 2_52.7	52.7	53	410	2.4	1860	5130	26.6	410	1.2	2200	7080	
A 30 2_59.4	59.4	47	400	2.1	1890	5500	23.6	400	1.0	2200	7530	
A 30 2_66.0	66.0	42	390	1.8	1900	5840	21.2	390	0.92	2200	7940	
A 30 2_76.5	76.5	37	350	1.4	1950	6480	18.3	350	0.71	2200	8690	
A 30 2_86.7	86.7	32	320	1.2	2000	7010	16.2	320	0.58	2200	9310	
A 30 2_97.5	97.5	28.7	300	0.96	2020	7480	14.4	300	0.48	2200	9600	
A 30 3_109.1	109.1	25.7	240	0.71	1300	8240	12.8	300	0.44	1300	9600	
A 30 3_120.5	120.5	23.2	243	0.65	1120	8540	11.6	300	0.40	1300	9600	
A 30 3_137.4	137.4	20.4	250	0.59	1300	8950	10.2	315	0.37	1300	9600	
A 30 3_150.7	150.7	18.6	261	0.56	1170	9210	9.3	330	0.35	1300	9600	
A 30 3_161.4	161.4	17.3	270	0.54	1300	9410	8.7	340	0.34	1300	9600	
A 30 3_178.5	178.5	15.7	274	0.49	1210	9600	7.8	345	0.31	1300	9600	
A 30 3_198.5	198.5	14.1	280	0.45	1300	9600	7.1	350	0.28	1300	9600	
A 30 3_216.6	216.6	12.9	287	0.43	1240	9600	6.5	360	0.27	1300	9600	
A 30 3_244.3	244.3	11.5	295	0.39	1300	9600	5.7	370	0.24	1300	9600	
A 30 3_271.5	271.5	10.3	301	0.36	1280	9600	5.2	380	0.23	1300	9600	
A 30 3_314.5	314.5	8.9	309	0.32	1300	9600	4.5	390	0.20	1300	9600	
A 30 3_356.3	356.3	7.9	320	0.29	1300	9600	3.9	370	0.17	1300	9600	
A 30 3_400.8	400.8	7.0	320	0.26	1300	9600	3.5	360	0.14	1300	9600	

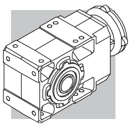

A 30 410 Nm

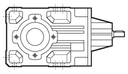	i	n_1 = 900 min^{-1}					n_1 = 500 min^{-1}					
		n_2 min^{-1}	M_{n2} Nm	P_{n1} kW	R_{n1} N	R_{n2} N	n_2 min^{-1}	M_{n2} Nm	P_{n1} kW	R_{n1} N	R_{n2} N	
A 30 2_5.4	5.4	166	255	4.7	1660	3630	92	300	3.1	2200	4470	285
A 30 2_6.4	6.4	140	270	4.2	1630	3830	78	300	2.6	2200	4830	
A 30 2_7.0	7.0	128	284	4.1	1650	3920	71	300	2.4	2200	5040	
A 30 2_8.5	8.5	106	290	3.4	1810	4240	59	300	2.0	2200	5470	
A 30 2_9.3	9.3	97	300	3.2	1900	4380	54	300	1.8	2200	5710	
A 30 2_10.5	10.5	86	391	3.7	2200	4130	48	410	2.2	2200	5400	
A 30 2_11.8	11.8	76	300	2.6	2200	4880	42	300	1.4	2200	6320	
A 30 2_13.6	13.6	66	410	3.0	2200	4600	37	410	1.7	2200	6110	
A 30 2_16.3	16.3	55	410	2.5	2200	5044	31	410	1.4	2200	6650	
A 30 2_18.0	18.0	50	410	2.3	2200	5280	27.8	410	1.3	2200	6940	
A 30 2_20.5	20.5	44	410	2.0	2200	5630	24.3	410	1.1	2200	7360	
A 30 2_22.8	22.8	40	410	1.8	2200	5910	22.0	410	1.0	2200	7700	
A 30 2_26.5	26.5	34	410	1.5	2200	6340	18.8	410	0.86	2200	8230	
A 30 2_29.3	29.3	31	410	1.4	2200	6640	17.1	410	0.78	2200	8590	
A 30 2_33.4	33.4	26.9	410	1.2	2200	7040	15.0	410	0.68	2200	9080	
A 30 2_36.6	36.6	24.6	410	1.1	2200	7340	13.6	410	0.62	2200	9440	
A 30 2_39.3	39.3	22.9	410	1.0	2200	7560	12.7	410	0.58	2200	9600	
A 30 2_43.4	43.4	20.7	410	0.95	2200	7900	11.5	410	0.53	2200	9600	
A 30 2_48.3	48.3	18.6	410	0.85	2200	8270	10.4	410	0.47	2200	9600	
A 30 2_52.7	52.7	17.1	410	0.78	2200	8590	9.5	410	0.43	2200	9600	
A 30 2_59.4	59.4	15.1	400	0.67	2200	9090	8.4	400	0.37	2200	9600	
A 30 2_66.0	66.0	13.6	390	0.59	2200	9560	7.6	390	0.33	2200	9600	
A 30 2_76.5	76.5	11.8	350	0.46	2200	9600	6.5	350	0.25	2200	9600	
A 30 2_86.7	86.7	10.4	320	0.37	2200	9600	5.8	320	0.21	2200	9600	
A 30 2_97.5	97.5	9.2	300	0.31	2200	9600	5.1	300	0.17	2200	9600	
A 30 3_109.1	109.1	8.3	350	0.33	1300	9600	4.6	370	0.20	1300	9600	
A 30 3_120.5	120.5	7.5	354	0.30	1300	9600	4.2	410	0.20	1300	9600	
A 30 3_137.4	137.4	6.5	370	0.28	1300	9600	3.6	410	0.17	1300	9600	
A 30 3_150.7	150.7	6.0	381	0.26	1300	9600	3.3	410	0.16	1300	9600	
A 30 3_161.4	161.4	5.6	390	0.25	1300	9600	3.1	410	0.15	1300	9600	
A 30 3_178.5	178.5	5.0	400	0.23	1300	9600	2.8	410	0.13	1300	9600	
A 30 3_198.5	198.5	4.5	410	0.21	1300	9600	2.5	410	0.12	1300	9600	
A 30 3_216.6	216.6	4.2	410	0.20	1300	9600	2.3	410	0.11	1300	9600	
A 30 3_244.3	244.3	3.7	410	0.17	1300	9600	2.0	410	0.10	1300	9600	
A 30 3_271.5	271.5	3.3	410	0.16	1300	9600	1.8	410	0.09	1300	9600	
A 30 3_314.5	314.5	2.9	410	0.13	1300	9600	1.6	410	0.07	1300	9600	
A 30 3_356.3	356.3	2.5	380	0.11	1300	9600	1.4	380	0.06	1300	9600	
A 30 3_400.8	400.8	2.2	360	0.09	1300	9600	1.2	360	0.05	1300	9600	

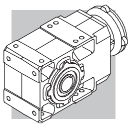

A 35 600 Nm

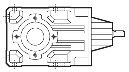	i	$n_1 = 2800\ min^{-1}$					$n_1 = 1400\ min^{-1}$					
		n_2 min-1	M_{n2} Nm	P_{n1} kW	R_{n1} N	R_{n2} N	n_2 min-1	M_{n2} Nm	P_{n1} kW	R_{n1} N	R_{n2} N	
A 35 2_5.4	5.4	517	246	14.2	1420	4000	259	310	8.9	1790	5050	289
A 35 2_6.4	6.4	437	262	12.7	1420	4230	218	330	8.0	1790	5330	
A 35 2_7.0	7.0	399	278	12.3	1410	4320	199	350	7.8	1790	5440	
A 35 2_8.5	8.5	331	286	10.5	1450	4650	165	360	6.6	1830	5850	
A 35 2_9.3	9.3	301	302	10.1	1450	4760	150	380	6.4	1830	6000	
A 35 2_10.6	10.6	263	310	9.1	1440	5010	132	390	5.7	1830	6310	
A 35 2_11.8	11.8	238	317	8.4	1480	5200	119	400	5.3	1860	6550	
A 35 2_13.1	13.1	214	400	10.9	1630	4470	107	550	6.6	2100	5780	
A 35 2_15.5	15.5	181	430	10.0	1620	4670	90	570	5.7	2120	6190	
A 35 2_17.0	17.0	165	465	9.7	1620	4730	83	600	5.5	2130	6310	
A 35 2_20.4	20.4	137	500	8.4	1630	5080	69	600	4.6	2170	6930	
A 35 2_22.5	22.5	125	540	7.8	1660	5290	62	600	4.2	2200	7260	
A 35 2_25.7	25.7	109	585	7.1	1640	5540	55	600	3.6	2200	7740	
A 35 2_28.4	28.4	98	600	6.6	1660	5760	49	600	3.3	2200	8130	
A 35 2_33.2	33.2	84	600	5.6	910	6240	42	600	2.8	2200	8730	
A 35 2_36.6	36.6	76	600	5.1	1080	6560	38	600	2.6	2200	9140	
A 35 2_41.8	41.8	67	600	4.5	1140	7010	34	600	2.2	2200	9700	
A 35 2_45.8	45.8	61	600	4.1	1260	7330	31	600	2.0	2200	10100	
A 35 2_49.1	49.1	57	600	3.8	1260	7580	28.5	600	1.9	2200	10400	
A 35 2_54.3	54.3	52	600	3.4	1360	7950	25.8	600	1.7	2200	10900	
A 35 2_60.4	60.4	46	600	3.1	1470	8360	23.2	600	1.6	2200	11400	
A 35 2_65.8	65.8	43	600	2.8	1470	8700	21.3	600	1.4	2200	11800	
A 35 2_74.3	74.3	38	600	2.5	1560	9200	18.8	600	1.3	2200	12000	
A 35 2_82.5	82.5	34	600	2.3	1560	9650	17.0	600	1.1	2200	12000	
A 35 2_95.6	95.6	29.3	540	1.8	1860	10600	14.6	540	0.88	2200	12000	
A 35 3_105.5	105.5	26.5	430	1.3	550	12000	13.3	525	0.80	780	12000	
A 35 3_116.9	116.9	24.0	455	1.3	650	12000	12.0	560	0.77	870	12000	
A 35 3_136.3	136.3	20.5	470	1.1	870	12000	10.3	575	0.68	1110	12000	
A 35 3_150.6	150.6	18.6	495	1.1	900	12000	9.3	600	0.64	1160	12000	
A 35 3_171.8	171.8	16.3	505	0.95	960	12000	8.1	600	0.56	1250	12000	
A 35 3_188.3	188.3	14.9	525	0.90	990	12000	7.4	600	0.51	1300	12000	
A 35 3_201.8	201.8	13.9	525	0.84	1020	12000	6.9	600	0.48	1300	12000	
A 35 3_223.2	223.2	12.5	545	0.79	1050	12000	6.3	600	0.43	1300	12000	
A 35 3_248.1	248.1	11.3	565	0.73	1080	12000	5.6	600	0.39	1300	12000	
A 35 3_270.7	270.7	10.3	570	0.68	1110	12000	5.2	600	0.36	1300	12000	
A 35 3_305.4	305.4	9.2	585	0.62	1140	12000	4.6	600	0.32	1300	12000	
A 35 3_339.3	339.3	8.3	520	0.49	1210	12000	4.1	520	0.25	1300	12000	
A 35 3_393.2	393.2	7.1	465	0.38	1260	12000	3.6	465	0.19	1300	12000	

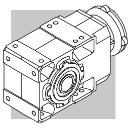

A 35 600 Nm

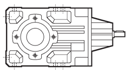	i	n_1 = 900 min-1					n_1 = 500 min-1					
		n_2 min-1	M_{n2} Nm	P_{n1} kW	R_{n1} N	R_{n2} N	n_2 min-1	M_{n2} Nm	P_{n1} kW	R_{n1} N	R_{n2} N	
A 35 2_5.4	5.4	166	340	6.3	2150	5940	92	340	3.5	2200	7600	289
A 35 2_6.4	6.4	140	350	5.5	2190	6340	78	350	3.0	2200	8090	
A 35 2_7.0	7.0	128	370	5.3	2200	6490	71	370	2.9	2200	8290	
A 35 2_8.5	8.5	106	380	4.5	2200	6970	59	380	2.5	2200	8890	
A 35 2_9.3	9.3	97	400	4.3	2200	7160	54	400	2.4	2200	9140	
A 35 2_10.6	10.6	85	400	3.8	2200	7570	47	400	2.1	2200	9650	
A 35 2_11.8	11.8	76	400	3.4	2200	7910	42	400	1.9	2200	10100	
A 35 2_13.1	13.1	69	600	4.6	2200	6910	38	600	2.6	2200	9140	
A 35 2_15.5	15.5	58	600	3.9	2090	7510	32	600	2.2	2200	9860	
A 35 2_17.0	17.0	53	600	3.5	2200	7840	29.5	600	2.0	2200	10300	
A 35 2_20.4	20.4	44	600	2.9	2200	8560	24.5	600	1.6	2200	11100	
A 35 2_22.5	22.5	40	600	2.7	2200	8950	22.2	600	1.5	2200	11600	
A 35 2_25.7	25.7	35	600	2.3	2200	9500	19.5	600	1.3	2200	12000	
A 35 2_28.4	28.4	32	600	2.1	2200	9950	17.6	600	1.2	2200	12000	
A 35 2_33.2	33.2	27.1	600	1.8	2200	10700	15.1	600	1.0	2200	12000	
A 35 2_36.6	36.6	24.6	600	1.6	2200	11100	13.7	600	0.91	2200	12000	
A 35 2_41.8	41.8	21.5	600	1.4	2200	11800	12.0	600	0.80	2200	12000	
A 35 2_45.8	45.8	19.6	600	1.3	2200	12000	10.9	600	0.73	2200	12000	
A 35 2_49.1	49.1	18.3	600	1.2	2200	12000	10.2	600	0.68	2200	12000	
A 35 2_54.3	54.3	16.6	600	1.1	2200	12000	9.2	600	0.62	2200	12000	
A 35 2_60.4	60.4	14.9	600	1.0	2200	12000	8.3	600	0.55	2200	12000	
A 35 2_65.8	65.8	13.7	600	0.91	2200	12000	7.6	600	0.51	2200	12000	
A 35 2_74.3	74.3	12.1	600	0.81	2200	12000	6.7	600	0.45	2200	12000	
A 35 2_82.5	82.5	10.9	600	0.73	2200	12000	6.1	600	0.40	2200	12000	
A 35 2_95.6	95.6	9.4	540	0.57	2200	12000	5.2	540	0.31	2200	12000	
A 35 3_105.5	105.5	8.5	600	0.59	940	12000	4.7	600	0.33	1300	12000	
A 35 3_116.9	116.9	7.7	600	0.53	1230	12000	4.3	600	0.30	1300	12000	
A 35 3_136.3	136.3	6.6	600	0.46	1300	12000	3.7	600	0.25	1300	12000	
A 35 3_150.6	150.6	6.0	600	0.41	1300	12000	3.3	600	0.23	1300	12000	
A 35 3_171.8	171.8	5.2	600	0.36	1300	12000	2.9	600	0.20	1300	12000	
A 35 3_188.3	188.3	4.8	600	0.33	1300	12000	2.7	600	0.18	1300	12000	
A 35 3_201.8	201.8	4.5	600	0.31	1300	12000	2.5	600	0.17	1300	12000	
A 35 3_223.2	223.2	4.0	600	0.28	1300	12000	2.2	600	0.15	1300	12000	
A 35 3_248.1	248.1	3.6	600	0.25	1300	12000	2.0	600	0.14	1300	12000	
A 35 3_270.7	270.7	3.3	600	0.23	1300	12000	1.8	600	0.13	1300	12000	
A 35 3_305.4	305.4	2.9	600	0.20	1300	12000	1.6	600	0.11	1300	12000	
A 35 3_339.3	339.3	2.7	520	0.16	1300	12000	1.5	520	0.09	1300	12000	
A 35 3_393.2	393.2	2.3	465	0.12	1300	12000	1.3	465	0.07	1300	12000	

A 41 850 Nm

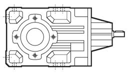	i	n_1 = 2800 min^{-1}					n_1 = 1400 min^{-1}					
		n_2 min^{-1}	M_{n2} Nm	P_{n1} kW	R_{n1} N	R_{n2} N	n_2 min^{-1}	M_{n2} Nm	P_{n1} kW	R_{n1} N	R_{n2} N	
A 41 2_5.2	5.2	534	450	27	1790	4350	267	550	16.4	2450	5560	293
A 41 2_7.1	7.1	393	490	22	1890	4850	197	550	12.0	2670	6430	
A 41 2_8.3	8.3	336	510	19.1	1900	5140	168	550	10.3	2750	6920	
A 41 2_9.2	9.2	304	530	18.0	1980	5300	152	550	9.3	2860	7240	
A 41 2_10.1	10.1	276	435	13.4	2680	6030	138	535	8.2	3390	7650	
A 41 2_11.7	11.7	238	550	14.6	2050	5870	119	550	7.3	2950	8070	
A 41 2_13.8	13.8	204	480	10.9	2690	6680	102	585	6.6	3430	8510	
A 41 2_16.1	16.1	174	500	9.7	2700	7070	87	610	5.9	3430	9000	
A 41 2_17.8	17.8	158	515	9.0	2730	7310	79	630	5.5	3470	9300	
A 41 2_22.7	22.7	123	550	7.6	2730	7970	62	680	4.7	3460	10100	
A 41 2_28.3	28.3	99	595	6.6	2670	8570	49	730	4.0	3450	10900	
A 41 2_35.9	35.9	78	635	5.5	2590	9320	39	780	3.4	3410	11800	
A 41 2_45.1	45.1	62	680	4.7	2500	10100	31	830	2.9	3330	12800	
A 41 2_48.3	48.3	58	690	4.5	2430	10300	29.0	850	2.7	3200	13100	
A 41 2_53.1	53.1	53	700	4.1	2470	10700	26.3	850	2.5	3330	13700	
A 41 2_58.8	58.8	48	730	3.9	2390	11100	23.8	850	2.3	3460	14300	
A 41 2_64.2	64.2	44	740	3.6	2320	11500	21.8	850	2.1	3460	14800	
A 41 2_71.3	71.3	39	780	3.4	2120	11800	19.6	850	1.9	3470	15000	
A 41 2_79.2	79.2	35	800	3.1	1990	12300	17.7	800	1.6	3500	15000	
A 41 3_92.8	92.8	30	650	2.3	270	14000	15.1	800	1.4	430	15000	
A 41 3_115.9	115.9	24.2	800	2.2	310	14600	12.1	850	1.2	980	15000	
A 41 3_146.9	146.9	19.1	850	1.9	790	15000	9.5	850	0.93	1640	15000	
A 41 3_184.4	184.4	15.2	850	1.5	1290	15000	7.6	850	0.74	1770	15000	
A 41 3_197.5	197.5	14.2	850	1.4	1360	15000	7.1	850	0.69	1790	15000	
A 41 3_217.4	217.4	12.9	850	1.3	1390	15000	6.4	850	0.63	1820	15000	
A 41 3_240.6	240.6	11.6	850	1.1	1410	15000	5.8	850	0.57	1840	15000	
A 41 3_262.5	262.5	10.7	850	1.0	1430	15000	5.3	850	0.52	1860	15000	
A 41 3_291.7	291.7	9.6	850	0.94	1450	15000	4.8	850	0.47	1880	15000	
A 41 3_324.2	324.2	8.6	850	0.84	1470	15000	4.3	850	0.42	1900	15000	
A 41 3_376.8	376.8	7.4	850	0.73	1500	15000	3.7	850	0.36	1930	15000	

A 41 850 Nm

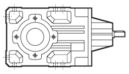	i	n₁ = 900 min-1					n₁ = 500 min-1					
		n_2 min-1	M_{n2} Nm	P_{n1} kW	R_{n1} N	R_{n2} N	n_2 min-1	M_{n2} Nm	P_{n1} kW	R_{n1} N	R_{n2} N	
A 41 2_5.2	5.2	172	550	10.5	3140	6850	95	550	5.8	3500	8900	293
A 41 2_7.1	7.1	126	550	7.7	3360	7870	70	550	4.3	3500	10100	
A 41 2_8.3	8.3	108	550	6.6	3440	8430	60	550	3.7	3500	10800	
A 41 2_9.2	9.2	98	550	6.0	3500	8800	54	550	3.3	3500	11300	
A 41 2_10.1	10.1	89	610	6.0	3500	8920	49	730	4.0	3500	10900	
A 41 2_11.7	11.7	77	550	4.7	3500	9760	43	550	2.6	3500	12400	
A 41 2_13.8	13.8	65	670	4.9	3500	9900	36	800	3.2	3500	12100	
A 41 2_16.1	16.1	56	700	4.4	3500	10500	31	830	2.9	3500	12800	
A 41 2_17.8	17.8	51	720	4.1	3500	10800	28.1	850	2.7	3500	13300	
A 41 2_22.7	22.7	40	780	3.4	3500	11700	22.0	850	2.1	3500	14800	
A 41 2_28.3	28.3	32	830	2.9	3500	12700	17.7	850	1.7	3500	15000	
A 41 2_35.9	35.9	25.1	850	2.4	3500	14000	13.9	850	1.3	3500	15000	
A 41 2_45.1	45.1	20.0	850	1.9	3500	15000	11.1	850	1.1	3500	15000	
A 41 2_48.3	48.3	18.6	850	1.8	3500	15000	10.4	850	0.98	3500	15000	
A 41 2_53.1	53.1	16.9	850	1.6	3500	15000	9.4	850	0.89	3500	15000	
A 41 2_58.8	58.8	15.3	850	1.4	3500	15000	8.5	850	0.81	3500	15000	
A 41 2_64.2	64.2	14.0	850	1.3	3300	15000	7.8	850	0.74	3500	15000	
A 41 2_71.3	71.3	12.6	850	1.2	3500	15000	7.0	850	0.66	3500	15000	
A 41 2_79.2	79.2	11.4	800	1.0	3500	15000	6.3	800	0.56	3500	15000	
A 41 3_92.8	92.8	9.7	800	0.89	1080	15000	5.4	800	0.50	2110	15000	
A 41 3_115.9	115.9	7.8	850	0.76	1630	15000	4.3	850	0.42	2200	15000	
A 41 3_146.9	146.9	6.1	850	0.60	2020	15000	3.4	850	0.33	2200	15000	
A 41 3_184.4	184.4	4.9	850	0.48	2100	15000	2.7	850	0.27	2200	15000	
A 41 3_197.5	197.5	4.6	850	0.45	2120	15000	2.5	850	0.25	2200	15000	
A 41 3_217.4	217.4	4.1	850	0.40	2150	15000	2.3	850	0.22	2200	15000	
A 41 3_240.6	240.6	3.7	850	0.37	2170	15000	2.1	850	0.20	2200	15000	
A 41 3_262.5	262.5	3.4	850	0.34	2190	15000	1.9	850	0.19	2200	15000	
A 41 3_291.7	291.7	3.1	850	0.30	2200	15000	1.7	850	0.17	2200	15000	
A 41 3_324.2	324.2	2.8	850	0.27	2200	15000	1.5	850	0.15	2200	15000	
A 41 3_376.8	376.8	2.4	850	0.23	2200	15000	1.3	850	0.13	2200	15000	

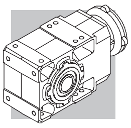

A 50 1500 Nm

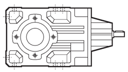	i	n_1 = 2800 min^{-1}					n_1 = 1400 min^{-1}					
		n_2 min^{-1}	M_{n2} Nm	P_{n1} kW	R_{n1} N	R_{n2} N	n_2 min^{-1}	M_{n2} Nm	P_{n1} kW	R_{n1} N	R_{n2} N	
A 50 2_7.7	7.7	362	550	22	2300	7920	181	700	14.1	2890	9960	297
A 50 2_9.7	9.7	288	600	19.2	2330	8530	144	750	12.0	2950	10800	
A 50 2_13.1	13.1	214	600	14.3	2460	9600	107	750	8.9	3110	12100	
A 50 2_16.6	16.6	169	640	12.0	2490	10400	84	800	7.5	3150	13100	
A 50 2_20.9	20.9	134	640	9.5	2540	11400	67	800	6.0	3210	14400	
A 50 3_24.0	24.0	116	1150	15.4	1850	7020	58	1500	10.0	2100	8540	
A 50 3_26.4	26.4	106	1200	14.6	2100	7170	53	1500	9.1	2690	9100	
A 50 3_32.4	32.4	86	1290	12.8	1800	4630	43	1500	7.5	2760	10400	
A 50 3_35.6	35.6	79	1340	12.1	2080	7830	39	1500	6.8	3290	11000	
A 50 3_40.9	40.9	68	1415	11.1	1740	8130	34	1500	5.9	3220	11900	
A 50 3_45.0	45.0	62	1470	10.5	2030	8340	31	1500	5.4	3440	12600	
A 50 3_51.7	51.7	54	1500	9.4	1680	8970	27.1	1500	4.7	3400	13600	
A 50 3_56.8	56.8	49	1500	8.5	2150	9540	24.6	1500	4.3	3480	14400	
A 50 3_63.9	63.9	44	1500	7.6	1900	10300	21.9	1500	3.8	3450	15300	
A 50 3_70.2	70.2	40	1500	6.9	2350	10900	19.9	1500	3.4	3500	16100	
A 50 3_81.5	81.5	34	1500	5.9	2170	11900	17.2	1500	3.0	3500	17300	
A 50 3_89.5	89.5	31	1500	5.4	2590	12600	15.6	1500	2.7	3500	18200	
A 50 3_99.5	99.5	28.1	1500	4.9	2260	13400	14.1	1500	2.4	3500	19200	
A 50 3_109.4	109.4	25.6	1500	4.4	2680	14100	12.8	1500	2.2	3500	20000	
A 50 3_118.0	118.0	23.7	1500	4.1	2390	14700	11.9	1500	2.0	3500	20000	
A 50 3_129.7	129.7	21.6	1500	3.7	2720	15400	10.8	1500	1.9	3500	20000	
A 50 3_140.6	140.6	19.9	1500	3.4	2440	16100	10.0	1500	1.7	3500	20000	
A 50 3_154.6	154.6	18.1	1500	3.1	2730	16900	9.1	1500	1.6	3500	20000	
A 50 3_173.4	173.4	16.2	1500	2.8	2480	17900	8.1	1500	1.4	3500	20000	
A 50 3_190.6	190.6	14.7	1500	2.5	2740	18800	7.3	1500	1.3	3500	20000	
A 50 4_211.0	211.0	13.3	1500	2.3	1930	20000	6.6	1500	1.2	2200	20000	
A 50 4_232.0	232.0	12.1	1500	2.1	1970	20000	6.0	1500	1.1	2200	20000	
A 50 4_260.9	260.9	10.7	1500	1.9	2010	20000	5.4	1500	0.95	2200	20000	
A 50 4_286.8	286.8	9.8	1500	1.7	2040	20000	4.9	1500	0.86	2200	20000	
A 50 4_332.6	332.6	8.4	1500	1.5	2080	20000	4.2	1500	0.74	2200	20000	
A 50 4_365.6	365.6	7.7	1500	1.4	2100	20000	3.8	1500	0.68	2200	20000	
A 50 4_406.4	406.4	6.9	1500	1.2	2130	20000	3.4	1500	0.61	2200	20000	
A 50 4_446.8	446.8	6.3	1500	1.1	2140	20000	3.1	1500	0.55	2200	20000	
A 50 4_481.6	481.6	5.8	1500	1.0	2160	20000	2.9	1500	0.51	2200	20000	
A 50 4_529.5	529.5	5.3	1500	0.93	2170	20000	2.6	1500	0.47	2200	20000	
A 50 4_574.2	574.2	4.9	1500	0.86	2190	20000	2.4	1500	0.43	2200	20000	
A 50 4_631.2	631.2	4.4	1500	0.78	2200	20000	2.2	1500	0.39	2200	20000	
A 50 4_707.9	707.9	4.0	1500	0.70	2200	20000	2.0	1500	0.35	2200	20000	
A 50 4_778.2	778.2	3.6	1500	0.63	2200	20000	1.8	1500	0.32	2200	20000	

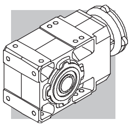

A 50 1500 Nm

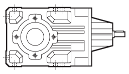	i	n_1 = 900 min^{-1}					n_1 = 500 min^{-1}					
		n_2 min^{-1}	M_{n2} Nm	P_{n1} kW	R_{n1} N	R_{n2} N	n_2 min^{-1}	M_{n2} Nm	P_{n1} kW	R_{n1} N	R_{n2} N	
A 50 2_7.7	7.7	116	770	10.0	3430	11700	65	900	6.5	3500	14300	297
A 50 2_9.7	9.7	92	830	8.5	3490	12600	51	1000	5.7	3500	15300	
A 50 2_13.1	13.1	69	830	6.3	3500	14200	38	1000	4.2	3500	17300	
A 50 2_16.6	16.6	54	880	5.3	3500	15400	30	1000	3.4	3500	18900	
A 50 2_20.9	20.9	43	880	4.2	3500	16800	23.9	1000	2.7	3500	20000	
A 50 3_24.0	24.0	37	1500	6.5	3480	11300	20.8	1500	3.6	3500	15700	
A 50 3_26.4	26.4	34	1500	5.9	3500	12000	18.9	1500	3.3	3500	16500	
A 50 3_32.4	32.4	27.8	1500	4.8	3500	13400	15.4	1500	2.7	3500	18300	
A 50 3_35.6	35.6	25.3	1500	4.4	3500	14200	14.0	1500	2.4	3500	19200	
A 50 3_40.9	40.9	22.0	1500	3.8	3500	15300	12.2	1500	2.1	3500	20000	
A 50 3_45.0	45.0	20.0	1500	3.5	3500	16000	11.1	1500	1.9	3500	20000	
A 50 3_51.7	51.7	17.4	1500	3.0	3450	17200	9.7	1500	1.7	3500	20000	
A 50 3_56.8	56.8	15.8	1500	2.7	3500	18100	8.8	1500	1.5	3500	20000	
A 50 3_63.9	63.9	14.1	1500	2.4	3500	19200	7.8	1500	1.4	3500	20000	
A 50 3_70.2	70.2	12.8	1500	2.2	3500	20000	7.1	1500	1.2	3500	20000	
A 50 3_81.5	81.5	11.0	1500	1.9	3500	20000	6.1	1500	1.1	3500	20000	
A 50 3_89.5	89.5	10.1	1500	1.7	3500	20000	5.6	1500	0.96	3500	20000	
A 50 3_99.5	99.5	9.0	1500	1.6	3500	20000	5.0	1500	0.87	3500	20000	
A 50 3_109.4	109.4	8.2	1500	1.4	3500	20000	4.6	1500	0.79	3500	20000	
A 50 3_118.0	118.0	7.6	1500	1.3	3500	20000	4.2	1500	0.73	3500	20000	
A 50 3_129.7	129.7	6.9	1500	1.2	3500	20000	3.9	1500	0.67	3500	20000	
A 50 3_140.6	140.6	6.4	1500	1.1	3500	20000	3.6	1500	0.61	3500	20000	
A 50 3_154.6	154.6	5.8	1500	1.0	3500	20000	3.2	1500	0.56	3500	20000	
A 50 3_173.4	173.4	5.2	1500	0.90	3500	20000	2.9	1500	0.50	3500	20000	
A 50 3_190.6	190.6	4.7	1500	0.82	3500	20000	2.6	1500	0.45	3500	20000	
A 50 4_211.0	211.0	4.3	1500	0.75	2200	20000	2.4	1500	0.42	2200	20000	
A 50 4_232.0	232.0	3.9	1500	0.68	2200	20000	2.2	1500	0.38	2200	20000	
A 50 4_260.9	260.9	3.4	1500	0.61	2200	20000	1.9	1500	0.34	2200	20000	
A 50 4_286.8	286.8	3.1	1500	0.55	2200	20000	1.7	1500	0.31	2200	20000	
A 50 4_332.6	332.6	2.7	1500	0.48	2200	20000	1.5	1500	0.27	2200	20000	
A 50 4_365.6	365.6	2.5	1500	0.43	2200	20000	1.4	1500	0.24	2200	20000	
A 50 4_406.4	406.4	2.2	1500	0.39	2200	20000	1.2	1500	0.22	2200	20000	
A 50 4_446.8	446.8	2.0	1500	0.36	2200	20000	1.1	1500	0.20	2200	20000	
A 50 4_481.6	481.6	1.9	1500	0.33	2200	20000	1.0	1500	0.18	2200	20000	
A 50 4_529.5	529.5	1.7	1500	0.30	2200	20000	0.94	1500	0.17	2200	20000	
A 50 4_574.2	574.2	1.6	1500	0.28	2200	20000	0.87	1500	0.15	2200	20000	
A 50 4_631.2	631.2	1.4	1500	0.25	2200	20000	0.79	1500	0.14	2200	20000	
A 50 4_707.9	707.9	1.3	1500	0.22	2200	20000	0.71	1500	0.12	2200	20000	
A 50 4_778.2	778.2	1.2	1500	0.20	2200	20000	0.64	1500	0.11	2200	20000	

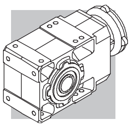

A 55 2000 Nm

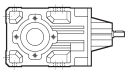	i	n_1 = **2800** min^{-1}					n_1 = **1400** min^{-1}					
		n_2 min^{-1}	M_{n2} Nm	P_{n1} kW	R_{n1} N	R_{n2} N	n_2 min^{-1}	M_{n2} Nm	P_{n1} kW	R_{n1} N	R_{n2} N	
A 55 2_4.9	4.9	571	760	48	1320	15100	286	900	28	2150	18700	301
A 55 2_6.4	6.4	438	800	39	1950	16400	219	950	23	2860	20300	
A 55 2_8.5	8.5	329	800	30	2810	18000	165	950	17.5	3500	22200	
A 55 2_10.4	10.4	269	840	25	2900	19100	135	1000	15.1	3500	23600	
A 55 2_13.1	13.1	214	840	20	3230	20600	107	1000	11.9	3500	25500	
A 55 2_15.7	15.7	178	840	16.7	3440	21900	89	1000	9.9	3500	27000	
A 55 2_19.2	19.2	146	925	15.0	3160	23200	73	1100	8.9	3500	28600	
A 55 3_23.8	23.8	118	1600	22	2050	21000	59	1950	13.2	2640	26000	
A 55 3_29.9	29.9	94	1700	18.3	2110	22500	47	2000	10.8	2770	28200	
A 55 3_40.3	40.3	69	1850	14.8	2150	24800	35	2000	8.0	2930	30000	
A 55 3_51.0	51.0	55	2000	12.6	2170	26500	27.5	2000	6.3	3050	30000	
A 55 3_64.3	64.3	44	2000	10.0	2230	29000	21.8	2000	5.0	3110	30000	
A 55 3_79.5	79.5	35	2000	8.1	1040	30000	17.6	2000	4.1	2820	30000	
A 55 3_101.4	101.4	27.6	2000	6.4	1340	30000	13.8	2000	3.2	3130	30000	
A 55 3_123.9	123.9	22.6	2000	5.2	1450	30000	11.3	2000	2.6	3230	30000	
A 55 3_132.7	132.7	21.1	2000	4.9	1450	30000	10.6	2000	2.4	3240	30000	
A 55 3_146.8	146.8	19.1	2000	4.4	1610	30000	9.5	2000	2.2	3290	30000	
A 55 3_160.4	160.4	17.5	2000	4.0	1660	30000	8.7	2000	2.0	3300	30000	
A 55 3_175.0	175.0	16.0	2000	3.7	1660	30000	8.0	2000	1.8	3300	30000	
A 55 3_194.2	194.2	14.4	2000	3.3	1710	30000	7.2	2000	1.7	3310	30000	
A 55 4_208.1	208.1	13.5	1600	2.5	1890	30000	6.7	1950	1.5	2200	30000	
A 55 4_262.6	262.6	10.7	1650	2.1	1980	30000	5.3	2000	1.3	2200	30000	
A 55 4_324.7	324.7	8.6	1750	1.8	2030	30000	4.3	2000	1.0	2200	30000	
A 55 4_414.0	414.0	6.8	1850	1.5	2080	30000	3.4	2000	0.80	2200	30000	
A 55 4_505.9	505.9	5.5	1900	1.2	2120	30000	2.8	2000	0.65	2200	30000	
A 55 4_542.0	542.0	5.2	1900	1.2	2140	30000	2.6	2000	0.61	2200	30000	
A 55 4_599.5	599.5	4.7	1950	1.1	2150	30000	2.3	2000	0.55	2200	30000	
A 55 4_655.1	655.1	4.3	1950	1.0	2180	30000	2.1	2000	0.50	2200	30000	
A 55 4_714.7	714.7	3.9	1950	0.90	2200	30000	2.0	2000	0.46	2200	30000	
A 55 4_793.0	793.0	3.5	2000	0.83	2200	30000	1.8	2000	0.42	2200	30000	

A 55 2000 Nm

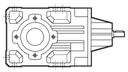	i	n_1 = 900 min-1					n_1 = 500 min-1					
		n_2 min-1	M_{n2} Nm	P_{n1} kW	R_{n1} N	R_{n2} N	n_2 min-1	M_{n2} Nm	P_{n1} kW	R_{n1} N	R_{n2} N	
A 55 2_4.9	4.9	184	1000	20	2850	21400	102	1160	13.1	3500	25600	301
A 55 2_6.4	6.4	141	1060	16.6	3500	23200	78	1230	10.7	3500	27700	
A 55 2_8.5	8.5	106	1060	12.6	3500	25400	59	1230	8.1	3500	30000	
A 55 2_10.4	10.4	87	1120	10.8	3500	27000	48	1290	6.9	3500	30000	
A 55 2_13.1	13.1	69	1120	8.6	3500	29100	38	1290	5.5	3500	30000	
A 55 2_15.7	15.7	57	1120	7.2	3500	30000	32	1290	4.6	3500	30000	
A 55 2_19.2	19.2	47	1230	6.4	3500	30000	26.0	1420	4.1	3500	30000	
A 55 3_23.8	23.8	38	2000	8.7	3280	30000	21.0	2000	4.8	3500	30000	
A 55 3_29.9	29.9	30	2000	6.9	3450	30000	16.7	2000	3.8	3500	30000	
A 55 3_40.3	40.3	22.3	2000	5.1	3500	30000	12.4	2000	2.9	3500	30000	
A 55 3_51.0	51.0	17.6	2000	4.1	3500	30000	9.8	2000	2.3	3500	30000	
A 55 3_64.3	64.3	14.0	2000	3.2	3500	30000	7.8	2000	1.8	3500	30000	
A 55 3_79.5	79.5	11.3	2000	2.6	3500	30000	6.3	2000	1.4	3500	30000	
A 55 3_101.4	101.4	8.9	2000	2.0	3500	30000	4.9	2000	1.1	3500	30000	
A 55 3_123.9	123.9	7.3	2000	1.7	3500	30000	4.0	2000	0.93	3500	30000	
A 55 3_132.7	132.7	6.8	2000	1.6	3500	30000	3.8	2000	0.87	3500	30000	
A 55 3_146.8	146.8	6.1	2000	1.4	3500	30000	3.4	2000	0.78	3500	30000	
A 55 3_160.4	160.4	5.6	2000	1.3	3500	30000	3.1	2000	0.72	3500	30000	
A 55 3_175.0	175.0	5.1	2000	1.2	3500	30000	2.9	2000	0.66	3500	30000	
A 55 3_194.2	194.2	4.6	2000	1.1	3500	30000	2.6	2000	0.59	3500	30000	
A 55 4_208.1	208.1	4.3	2000	1.0	2200	30000	2.4	2000	0.57	2200	30000	
A 55 4_262.6	262.6	3.4	2000	0.81	2200	30000	1.9	2000	0.45	2200	30000	
A 55 4_324.7	324.7	2.8	2000	0.65	2200	30000	1.5	2000	0.36	2200	30000	
A 55 4_414.0	414.0	2.2	2000	0.51	2200	30000	1.2	2000	0.28	2200	30000	
A 55 4_505.9	505.9	1.8	2000	0.42	2200	30000	1.0	2000	0.23	2200	30000	
A 55 4_542.0	542.0	1.7	2000	0.39	2200	30000	0.92	2000	0.22	2200	30000	
A 55 4_599.5	599.5	1.5	2000	0.35	2200	30000	0.83	2000	0.20	2200	30000	
A 55 4_655.1	655.1	1.4	2000	0.32	2200	30000	0.76	2000	0.18	2200	30000	
A 55 4_714.7	714.7	1.3	2000	0.30	2200	30000	0.70	2000	0.16	2200	30000	
A 55 4_793.0	793.0	1.1	2000	0.27	2200	30000	0.63	2000	0.15	2200	30000	

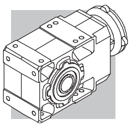

A 60 — 2800 Nm

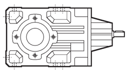	i	n_1 = 2800 min^{-1}					n_1 = 1400 min^{-1}					
		n_2 min^{-1}	M_{n2} Nm	P_{n1} kW	R_{n1} N	R_{n2} N	n_2 min^{-1}	M_{n2} Nm	P_{n1} kW	R_{n1} N	R_{n2} N	
A 60 2_7.9	7.9	356	950	38	2770	22500	178	1200	24	3400	27700	305
A 60 2_10.3	10.3	271	950	29	2970	24600	136	1200	18.1	3740	30000	
A 60 2_12.7	12.7	220	1000	25	3020	26200	110	1250	15.3	3810	30000	
A 60 2_16.7	16.7	167	1050	19.6	3080	28600	84	1300	12.1	3910	30000	
A 60 2_20.6	20.6	136	1100	16.7	3100	30000	68	1400	10.6	3890	30000	
A 60 3_25.7	25.7	109	2760	35	2380	26900	54	2800	17.5	3800	30000	
A 60 3_27.9	27.9	101	2800	32	2780	27700	50	2800	16.2	3930	30000	
A 60 3_31.7	31.7	88	2800	29	2790	29000	44	2800	14.2	3940	30000	
A 60 3_34.3	34.3	82	2800	26	2920	30000	41	2800	13.2	4060	30000	
A 60 3_41.7	41.7	67	2800	22	2940	30000	34	2800	10.8	4090	30000	
A 60 3_45.2	45.2	62	2800	20	3060	30000	31	2800	10.0	4200	30000	
A 60 3_51.3	51.3	55	2800	17.6	3030	30000	27.3	2800	8.8	4180	30000	
A 60 3_55.6	55.6	50	2800	16.2	3140	30000	25.2	2800	8.1	4280	30000	
A 60 3_65.0	65.0	43	2800	13.9	3110	30000	21.5	2800	6.9	4260	30000	
A 60 3_70.4	70.4	40	2800	12.8	3210	30000	19.9	2800	6.4	4360	30000	
A 60 3_79.7	79.7	35	2800	11.3	3160	30000	17.6	2800	5.7	4310	30000	
A 60 3_86.4	86.4	32	2800	10.4	3260	30000	16.2	2800	5.2	4410	30000	
A 60 3_99.5	99.5	28.1	2800	9.1	3210	30000	14.1	2800	4.5	4360	30000	
A 60 3_107.8	107.8	26.0	2800	8.4	3300	30000	13.0	2800	4.2	4450	30000	
A 60 3_123.0	123.0	22.8	2800	7.3	3250	30000	11.4	2800	3.7	4400	30000	
A 60 3_133.3	133.3	21.0	2800	6.8	3340	30000	10.5	2800	3.4	4490	30000	
A 60 3_144.0	144.0	19.4	2800	6.3	3280	30000	9.7	2800	3.1	4420	30000	
A 60 3_156.0	156.0	17.9	2800	5.8	3360	30000	9.0	2800	2.9	4510	30000	
A 60 3_171.5	171.5	16.3	2800	5.3	3290	30000	8.2	2800	2.6	4430	30000	
A 60 3_185.8	185.8	15.1	2800	4.9	3370	30000	7.5	2800	2.4	4520	30000	
A 60 4_208.7	208.7	13.4	2800	4.4	2720	30000	6.7	2800	2.2	3500	30000	
A 60 4_226.1	226.1	12.4	2800	4.1	2770	30000	6.2	2800	2.0	3500	30000	
A 60 4_264.3	264.3	10.6	2800	3.5	2860	30000	5.3	2800	1.7	3500	30000	
A 60 4_286.3	286.3	9.8	2800	3.2	2900	30000	4.9	2800	1.6	3500	30000	
A 60 4_324.2	324.2	8.6	2800	2.8	2960	30000	4.3	2800	1.4	3500	30000	
A 60 4_351.2	351.2	8.0	2800	2.6	2990	30000	4.0	2800	1.3	3500	30000	
A 60 4_404.7	404.7	6.9	2800	2.3	3050	30000	3.5	2800	1.1	3500	30000	
A 60 4_438.4	438.4	6.4	2800	2.1	3070	30000	3.2	2800	1.1	3500	30000	
A 60 4_500.3	500.3	5.6	2800	1.8	3110	30000	2.8	2800	0.92	3500	30000	
A 60 4_542.0	542.0	5.2	2800	1.7	3140	30000	2.6	2800	0.85	3500	30000	
A 60 4_585.8	585.8	4.8	2800	1.6	3150	30000	2.4	2800	0.79	3500	30000	
A 60 4_634.6	634.6	4.4	2800	1.5	3170	30000	2.2	2800	0.73	3500	30000	
A 60 4_697.3	697.3	4.0	2800	1.3	3190	30000	2.0	2800	0.66	3500	30000	
A 60 4_755.4	755.4	3.7	2800	1.2	3210	30000	1.9	2800	0.61	3500	30000	

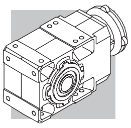

A 60 2800 Nm

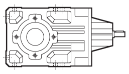	i	n_1 = 900 min^{-1}					n_1 = 500 min^{-1}					
		n_2 min^{-1}	M_{n2} Nm	P_{n1} kW	R_{n1} N	R_{n2} N	n_2 min^{-1}	M_{n2} Nm	P_{n1} kW	R_{n1} N	R_{n2} N	
A 60 2_7.9	7.9	114	1300	16.6	4190	30000	64	1550	11.0	4700	30000	305
A 60 2_10.3	10.3	87	1300	12.6	4470	30000	48	1550	8.4	4700	30000	
A 60 2_12.7	12.7	71	1400	11.0	4490	30000	39	1700	7.5	4700	30000	
A 60 2_16.7	16.7	54	1450	8.7	4610	30000	29.9	1700	5.7	4700	30000	
A 60 2_20.6	20.6	44	1550	7.5	4600	30000	24.3	1800	4.9	4700	30000	
A 60 3_25.7	25.7	35	2800	11.3	4680	30000	19.4	2800	6.3	4700	30000	
A 60 3_27.9	27.9	32	2800	10.4	4700	30000	18.0	2800	5.8	4700	30000	
A 60 3_31.7	31.7	28.4	2800	9.2	4700	30000	15.8	2800	5.1	4700	30000	
A 60 3_34.3	34.3	26.2	2800	8.5	4700	30000	14.6	2800	4.7	4700	30000	
A 60 3_41.7	41.7	21.6	2800	7.0	4700	30000	12.0	2800	3.9	4700	30000	
A 60 3_45.2	45.2	19.9	2800	6.4	4700	30000	11.1	2800	3.6	4700	30000	
A 60 3_51.3	51.3	17.5	2800	5.6	4700	30000	9.7	2800	3.1	4700	30000	
A 60 3_55.6	55.6	16.2	2800	5.2	4700	30000	9.0	2800	2.9	4700	30000	
A 60 3_65.0	65.0	13.8	2800	4.5	4700	30000	7.7	2800	2.5	4700	30000	
A 60 3_70.4	70.4	12.8	2800	4.1	4700	30000	7.1	2800	2.3	4700	30000	
A 60 3_79.7	79.7	11.3	2800	3.6	4700	30000	6.3	2800	2.0	4700	30000	
A 60 3_86.4	86.4	10.4	2800	3.4	4700	30000	5.8	2800	1.9	4700	30000	
A 60 3_99.5	99.5	9.0	2800	2.9	4700	30000	5.0	2800	1.6	4700	30000	
A 60 3_107.8	107.8	8.3	2800	2.7	4700	30000	4.6	2800	1.5	4700	30000	
A 60 3_123.0	123.0	7.3	2800	2.4	4700	30000	4.1	2800	1.3	4700	30000	
A 60 3_133.3	133.3	6.8	2800	2.2	4700	30000	3.8	2800	1.2	4700	30000	
A 60 3_144.0	144.0	6.2	2800	2.0	4700	30000	3.5	2800	1.1	4700	30000	
A 60 3_156.0	156.0	5.8	2800	1.9	4700	30000	3.2	2800	1.0	4700	30000	
A 60 3_171.5	171.5	5.2	2800	1.7	4700	30000	2.9	2800	0.94	4700	30000	
A 60 3_185.8	185.8	4.8	2800	1.6	4700	30000	2.7	2800	0.87	4700	30000	
A 60 4_208.7	208.7	4.3	2800	1.4	3500	30000	2.4	2800	0.79	3500	30000	
A 60 4_226.1	226.1	4.0	2800	1.3	3500	30000	2.2	2800	0.73	3500	30000	
A 60 4_264.3	264.3	3.4	2800	1.1	3500	30000	1.9	2800	0.62	3500	30000	
A 60 4_286.3	286.3	3.1	2800	1.0	3500	30000	1.7	2800	0.58	3500	30000	
A 60 4_324.2	324.2	2.8	2800	0.91	3500	30000	1.5	2800	0.51	3500	30000	
A 60 4_351.2	351.2	2.6	2800	0.84	3500	30000	1.4	2800	0.47	3500	30000	
A 60 4_404.7	404.7	2.2	2800	0.73	3500	30000	1.2	2800	0.41	3500	30000	
A 60 4_438.4	438.4	2.1	2800	0.68	3500	30000	1.1	2800	0.38	3500	30000	
A 60 4_500.3	500.3	1.8	2800	0.59	3500	30000	1.0	2800	0.33	3500	30000	
A 60 4_542.0	542.0	1.7	2800	0.55	3500	30000	0.92	2800	0.30	3500	30000	
A 60 4_585.8	585.8	1.5	2800	0.51	3500	30000	0.85	2800	0.28	3500	30000	
A 60 4_634.6	634.6	1.4	2800	0.47	3500	30000	0.79	2800	0.26	3500	30000	
A 60 4_697.3	697.3	1.3	2800	0.43	3500	30000	0.72	2800	0.24	3500	30000	
A 60 4_755.4	755.4	1.2	2800	0.39	3500	30000	0.66	2800	0.22	3500	30000	

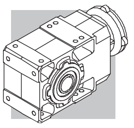

A 70 5000 Nm

	i	n_1 = 2800 min^{-1}					n_1 = 1400 min^{-1}					
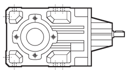		n_2 min^{-1}	M_{n2} Nm	P_{n1} kW	R_{n1} N	R_{n2} N	n_2 min^{-1}	M_{n2} Nm	P_{n1} kW	R_{n1} N	R_{n2} N	
A 70 3_9.4	9.4	297	2300	79	1900	25900	148	2800	48	2550	31900	309
A 70 3_10.2	10.2	274	2400	76	2480	26400	137	3200	50	1480	31900	
A 70 3_12.1	12.1	232	2400	64	2420	28000	116	3200	43	1400	33900	
A 70 3_13.1	13.1	214	2600	64	2420	28400	107	3350	41	2100	34600	
A 70 3_15.4	15.4	182	2700	56	2100	29900	91	3350	35	2430	36700	
A 70 3_16.7	16.7	168	2850	55	2500	30400	84	3600	35	2590	37200	
A 70 3_19.7	19.7	142	2900	48	2030	32100	71	3700	30	1790	39300	
A 70 3_21.3	21.3	131	3000	45	2750	32900	66	4000	30	1830	39800	
A 70 3_23.5	23.5	119	3500	48	4930	32900	60	4300	30	6250	40500	
A 70 3_27.8	27.8	101	3450	40	4960	35100	50	4200	24	6300	43300	
A 70 3_30.1	30.1	93	3700	40	4970	35600	47	4550	24	6300	43900	
A 70 3_35.4	35.4	79	3650	33	5040	37900	40	4500	21	6370	46600	
A 70 3_38.4	38.4	73	3950	33	5040	38400	36	4850	20	6380	47300	
A 70 3_45.2	45.2	62	3900	28	5050	40800	31	4800	17.1	6400	50000	
A 70 3_49.0	49.0	57	4250	28	5050	41300	28.6	5000	16.4	6450	50000	
A 70 3_53.2	53.2	53	4100	25	5030	42900	26.3	5000	15.1	6380	50000	
A 70 3_57.7	57.7	49	4450	25	5030	43400	24.3	5000	14.0	6490	50000	
A 70 3_66.9	66.9	42	4350	21	5050	46000	20.9	5000	12.0	6480	50000	
A 70 3_72.5	72.5	39	4750	21	5040	46500	19.3	5000	11.1	6580	50000	
A 70 3_79.3	79.3	35	4600	18.7	5020	48400	17.6	5000	10.2	6520	50000	
A 70 3_85.9	85.9	33	4950	18.6	5030	49100	16.3	5000	9.4	6620	50000	
A 70 3_96.2	96.2	29.1	4850	16.2	5000	50000	14.6	5000	8.4	6570	50000	
A 70 3_104.2	104.2	26.9	5000	15.5	5060	50000	13.4	5000	7.7	6660	50000	
A 70 3_120.6	120.6	23.2	5000	13.4	5010	50000	11.6	5000	6.7	6610	50000	
A 70 3_130.7	130.7	21.4	5000	12.3	5100	50000	10.7	5000	6.2	6690	50000	
A 70 3_141.9	141.9	19.7	5000	11.4	5040	50000	9.9	5000	5.7	6640	50000	
A 70 3_153.7	153.7	18.2	3300	6.9	5410	50000	9.1	4050	4.2	6920	50000	
A 70 4_169.8	169.8	16.5	5000	9.7	1130	50000	8.2	5000	4.9	2520	50000	
A 70 4_183.9	183.9	15.2	5000	9.0	1450	50000	7.6	5000	4.5	2670	50000	
A 70 4_220.3	220.3	12.7	5000	7.5	1560	50000	6.4	5000	3.7	2710	50000	
A 70 4_238.6	238.6	11.7	5000	6.9	1860	50000	5.9	5000	3.5	2770	50000	
A 70 4_292.0	292.0	9.6	5000	5.6	1900	50000	4.8	5000	2.8	2790	50000	
A 70 4_316.4	316.4	8.9	5000	5.2	2110	50000	4.4	5000	2.6	2850	50000	
A 70 4_369.4	369.4	7.6	5000	4.5	2110	50000	3.8	5000	2.2	2840	50000	
A 70 4_400.2	400.2	7.0	5000	4.1	2160	50000	3.5	5000	2.1	2900	50000	
A 70 4_475.8	475.8	5.9	5000	3.5	2150	50000	2.9	5000	1.7	2890	50000	
A 70 4_515.4	515.4	5.4	5000	3.2	2200	50000	2.7	5000	1.6	2940	50000	
A 70 4_595.0	595.0	4.7	5000	2.8	2190	50000	2.4	5000	1.4	2920	50000	
A 70 4_644.6	644.6	4.3	5000	2.6	2230	50000	2.2	5000	1.3	2970	50000	
A 70 4_705.1	705.1	4.0	5000	2.3	2200	50000	2.0	5000	1.2	2940	50000	
A 70 4_763.9	763.9	3.7	5000	2.2	2250	50000	1.8	5000	1.1	2990	50000	
A 70 4_855.3	855.3	3.3	5000	1.9	2220	50000	1.6	5000	0.96	2960	50000	
A 70 4_926.5	926.5	3.0	5000	1.8	2270	50000	1.5	5000	0.89	3000	50000	
A 70 4_1072	1072	2.6	5000	1.5	2240	50000	1.3	5000	0.77	2970	50000	
A 70 4_1161	1161	2.4	5000	1.4	2280	50000	1.2	5000	0.71	3020	50000	
A 70 4_1242	1242	2.3	5000	1.3	2250	50000	1.1	5000	0.66	2980	50000	
A 70 4_1346	1346	2.1	5000	1.2	2290	50000	1.0	5000	0.61	3030	50000	
A 70 4_1583	1583	1.8	5000	1.0	2260	50000	0.88	5000	0.52	2990	50000	
A 70 4_1715	1715	1.6	5000	0.96	2300	50000	0.82	5000	0.48	3040	50000	

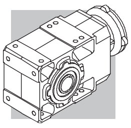

A 70 5000 Nm

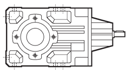	i	n_1 = 900 min^{-1}					n_1 = 500 min^{-1}					
		n_2 min^{-1}	M_{n2} Nm	P_{n1} kW	R_{n1} N	R_{n2} N	n_2 min^{-1}	M_{n2} Nm	P_{n1} kW	R_{n1} N	R_{n2} N	
A 70 3_9.4	9.4	95	3000	33	4290	36900	53	3000	18.3	7000	45400	309
A 70 3_10.2	10.2	88	3250	33	4290	37400	49	3250	18.3	7000	46100	
A 70 3_12.1	12.1	75	3650	31	1620	38700	41	3650	17.4	6470	47900	
A 70 3_13.1	13.1	69	3950	31	1650	39200	38	3950	17.4	6500	48600	
A 70 3_15.4	15.4	58	3700	25	3510	42200	32	3700	13.8	7000	50000	
A 70 3_16.7	16.7	54	4000	25	3560	42800	30	4000	13.8	7000	50000	
A 70 3_19.7	19.7	46	3700	19.5	4910	46100	25.4	3700	10.8	7000	50000	
A 70 3_21.3	21.3	42	4000	19.4	4950	46800	23.5	4000	10.8	7000	50000	
A 70 3_23.5	23.5	38	4900	21.6	7000	46300	21.3	5000	12.2	7000	50000	
A 70 3_27.8	27.8	32	4800	17.9	7000	49400	18.0	5000	10.4	7000	50000	
A 70 3_30.1	30.1	29.9	5000	17.2	7000	50000	16.6	5000	9.6	7000	50000	
A 70 3_35.4	35.4	25.4	5000	14.6	7000	50000	14.1	5000	8.1	7000	50000	
A 70 3_38.4	38.4	23.4	5000	13.5	7000	50000	13.0	5000	7.5	7000	50000	
A 70 3_45.2	45.2	19.9	5000	11.4	7000	50000	11.1	5000	6.4	7000	50000	
A 70 3_49.0	49.0	18.4	5000	10.6	7000	50000	10.2	5000	5.9	7000	50000	
A 70 3_53.2	53.2	16.9	5000	9.7	7000	50000	9.4	5000	5.4	7000	50000	
A 70 3_57.7	57.7	15.6	5000	9.0	7000	50000	8.7	5000	5.0	7000	50000	
A 70 3_66.9	66.9	13.4	5000	7.7	7000	50000	7.5	5000	4.3	7000	50000	
A 70 3_72.5	72.5	12.4	5000	7.1	7000	50000	6.9	5000	4.0	7000	50000	
A 70 3_79.3	79.3	11.3	5000	6.5	7000	50000	6.3	5000	3.6	7000	50000	
A 70 3_85.9	85.9	10.5	5000	6.0	7000	50000	5.8	5000	3.3	7000	50000	
A 70 3_96.2	96.2	9.4	5000	5.4	7000	50000	5.2	5000	3.0	7000	50000	
A 70 3_104.2	104.2	8.6	5000	5.0	7000	50000	4.8	5000	2.8	7000	50000	
A 70 3_120.6	120.6	7.5	5000	4.3	7000	50000	4.1	5000	2.4	7000	50000	
A 70 3_130.7	130.7	6.9	5000	4.0	7000	50000	3.8	5000	2.2	7000	50000	
A 70 3_141.9	141.9	6.3	5000	3.7	7000	50000	3.5	5000	2.0	7000	50000	
A 70 3_153.7	153.7	5.9	4600	3.1	7000	50000	3.3	5000	1.9	7000	50000	
A 70 4_169.8	169.8	5.3	5000	3.1	3170	50000	2.9	5000	1.7	3500	50000	
A 70 4_183.9	183.9	4.9	5000	2.9	3240	50000	2.7	5000	1.6	3500	50000	
A 70 4_220.3	220.3	4.1	5000	2.4	3270	50000	2.3	5000	1.3	3500	50000	
A 70 4_238.6	238.6	3.8	5000	2.2	3340	50000	2.1	5000	1.2	3500	50000	
A 70 4_292.0	292.0	3.1	5000	1.8	3350	50000	1.7	5000	1.0	3500	50000	
A 70 4_316.4	316.4	2.8	5000	1.7	3410	50000	1.6	5000	0.93	3500	50000	
A 70 4_369.4	369.4	2.4	5000	1.4	3410	50000	1.4	5000	0.80	3500	50000	
A 70 4_400.2	400.2	2.2	5000	1.3	3460	50000	1.2	5000	0.74	3500	50000	
A 70 4_475.8	475.8	1.9	5000	1.1	3450	50000	1.1	5000	0.62	3500	50000	
A 70 4_515.4	515.4	1.7	5000	1.0	3500	50000	0.97	5000	0.57	3500	50000	
A 70 4_595.0	595.0	1.5	5000	0.89	3480	50000	0.84	5000	0.49	3500	50000	
A 70 4_644.6	644.6	1.4	5000	0.82	3500	50000	0.78	5000	0.46	3500	50000	
A 70 4_705.1	705.1	1.3	5000	0.75	3500	50000	0.71	5000	0.42	3500	50000	
A 70 4_763.9	763.9	1.2	5000	0.69	3500	50000	0.65	5000	0.39	3500	50000	
A 70 4_855.3	855.3	1.1	5000	0.62	3500	50000	0.58	5000	0.34	3500	50000	
A 70 4_926.5	926.5	0.97	5000	0.57	3500	50000	0.54	5000	0.32	3500	50000	
A 70 4_1072	1072	0.84	5000	0.49	3500	50000	0.47	5000	0.27	3500	50000	
A 70 4_1161	1161	0.77	5000	0.46	3500	50000	0.43	5000	0.25	3500	50000	
A 70 4_1242	1242	0.72	5000	0.43	3500	50000	0.40	5000	0.24	3500	50000	
A 70 4_1346	1346	0.67	5000	0.39	3500	50000	0.37	5000	0.22	3500	50000	
A 70 4_1583	1583	0.57	5000	0.33	3500	50000	0.32	5000	0.19	3500	50000	
A 70 4_1715	1715	0.52	5000	0.31	3500	50000	0.29	5000	0.17	3500	50000	

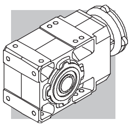

A 80 8000 Nm

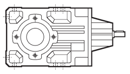	i	n_1 = **2800** min^{-1}					n_1 = **1400** min^{-1}					
		n_2 min^{-1}	M_{n2} Nm	P_{n1} kW	R_{n1} N	R_{n2} N	n_2 min^{-1}	M_{n2} Nm	P_{n1} kW	R_{n1} N	R_{n2} N	
A 80 3_9.8	9.8	285	3100	102	—	26300	142	3900	64	—	32100	312
A 80 3_10.7	10.7	263	3450	104	—	26300	131	4300	65	—	32300	
A 80 3_12.3	12.3	228	3450	91	—	27700	114	4300	56	—	34000	
A 80 3_13.3	13.3	211	3450	84	1150	28700	105	4300	52	1150	35200	
A 80 3_15.5	15.5	181	3300	69	1560	30600	91	4100	43	1730	37600	
A 80 3_16.7	16.7	167	3600	69	1440	30900	84	4500	43	1460	37900	
A 80 3_19.3	19.3	145	3500	58	1870	32800	72	4400	37	1880	40200	
A 80 3_20.9	20.9	134	3840	59	1670	33100	67	4800	37	1740	40600	
A 80 3_22.6	22.6	124	5050	72	4500	31200	62	6250	45	5830	38400	
A 80 3_24.5	24.5	114	5500	72	4470	31300	57	6750	44	5840	38600	
A 80 3_28.2	28.2	99	5350	61	4700	33500	50	6600	38	5960	41200	
A 80 3_30.6	30.6	92	5250	55	4840	34900	46	6450	34	6140	43000	
A 80 3_35.5	35.5	79	5700	52	4700	36000	39	7000	32	6000	44300	
A 80 3_38.5	38.5	73	6150	51	4720	36200	36	7600	32	6000	44500	
A 80 3_44.5	44.5	63	6050	44	4790	38600	31	7450	27	6070	47500	
A 80 3_48.2	48.2	58	6550	44	4790	38800	29.1	8000	27	6090	47900	
A 80 3_55.2	55.2	51	6400	37	4710	41300	25.4	7900	23	6050	50800	
A 80 3_59.8	59.8	47	6950	37	4690	41500	23.4	8000	22	6170	52300	
A 80 3_66.8	66.8	42	6800	33	4670	43700	21.0	8000	19.3	6150	54600	
A 80 3_72.4	72.4	39	7350	33	4680	44000	19.3	8000	17.8	6280	56500	
A 80 3_82.3	82.3	34	7200	28	4570	46600	17.0	8000	15.7	6230	59300	
A 80 3_89.2	89.2	31	7800	28	4570	46900	15.7	8000	14.5	6350	61400	
A 80 3_96.0	96.0	29.2	7500	25	4410	48900	14.6	8000	13.4	6260	63000	
A 80 3_104.0	104.0	26.9	8000	25	4500	49500	13.5	8000	12.4	6380	65000	
A 80 3_116.0	116.0	24.1	7950	22	4230	51700	12.1	8000	11.1	6300	65000	
A 80 3_125.6	125.6	22.3	8000	21	4630	53400	11.1	8000	10.3	6420	65000	
A 80 3_144.7	144.7	19.3	8000	17.8	4320	56400	9.7	8000	8.9	6350	65000	
A 80 3_156.8	156.8	17.9	8000	16.4	4750	58300	8.9	8000	8.2	6460	65000	
A 80 4_171.3	171.3	16.3	8000	15.4	—	65000	8.2	8000	7.7	1230	65000	
A 80 4_214.7	214.7	13.0	8000	12.3	—	65000	6.5	8000	6.1	1400	65000	
A 80 4_232.6	232.6	12.0	8000	11.3	—	65000	6.0	8000	5.7	1810	65000	
A 80 4_277.3	277.3	10.1	8000	9.5	540	65000	5.0	8000	4.8	1930	65000	
A 80 4_300.4	300.4	9.3	8000	8.8	900	65000	4.7	8000	4.4	2290	65000	
A 80 4_354.0	354.0	7.9	8000	7.4	800	65000	4.0	8000	3.7	2190	65000	
A 80 4_383.5	383.5	7.3	8000	6.9	1140	65000	3.7	8000	3.4	2530	65000	
A 80 4_442.1	442.1	6.3	8000	6.0	1040	65000	3.2	8000	3.0	2430	65000	
A 80 4_478.9	478.9	5.8	8000	5.5	1370	65000	2.9	8000	2.8	2670	65000	
A 80 4_560.5	560.5	5.0	8000	4.7	1240	65000	2.5	8000	2.4	2630	65000	
A 80 4_607.2	607.2	4.6	8000	4.3	1550	65000	2.3	8000	2.2	2720	65000	
A 80 4_703.5	703.5	4.0	8000	3.7	1440	65000	2.0	8000	1.9	2690	65000	
A 80 4_762.1	762.1	3.7	8000	3.5	1730	65000	1.8	8000	1.7	2760	65000	
A 80 4_829.5	829.5	3.4	8000	3.2	1530	65000	1.7	8000	1.6	2720	65000	
A 80 4_898.7	898.7	3.1	8000	2.9	1820	65000	1.6	8000	1.5	2780	65000	
A 80 4_1001	1001	2.8	8000	2.6	1620	65000	1.4	8000	1.3	2740	65000	
A 80 4_1085	1085	2.6	8000	2.4	1900	65000	1.3	8000	1.2	2800	65000	
A 80 4_1237	1237	2.3	8000	2.1	1660	65000	1.1	8000	1.1	2750	65000	
A 80 4_1340	1340	2.1	8000	2.0	1940	65000	1.0	8000	0.98	2810	65000	
A 80 4_1438	1438	1.9	8000	1.8	1730	65000	0.97	8000	0.92	2770	65000	
A 80 4_1558	1558	1.8	8000	1.7	2000	65000	0.90	8000	0.85	2830	65000	

(—) Nehmen Sie bitte Kontakt mit unserem technischen Service auf und benennen die Querkraftsdaten (Drehrichtung, Orientierung, Anordnung)

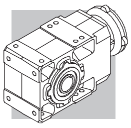

A 80 8000 Nm

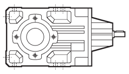	i	n_1 = 900 min^{-1}					n_1 = 500 min^{-1}					
		n_2	M_{n2}	P_{n1}	R_{n1}	R_{n2}	n_2	M_{n2}	P_{n1}	R_{n1}	R_{n2}	
		min^{-1}	Nm	kW	N	N	min^{-1}	Nm	kW	N	N	
A 80 3_9.8	9.8	92	4450	47	—	36700	51	5300	31	—	43800	312
A 80 3_10.7	10.7	84	4900	48	—	36900	47	5850	32	—	44000	
A 80 3_12.3	12.3	73	4900	41	—	38900	41	5850	27	—	46400	
A 80 3_13.3	13.3	68	4900	38	1360	40200	38	5850	25	1600	47900	
A 80 3_15.5	15.5	58	4650	31	2130	43000	32	5550	21	2530	51300	
A 80 3_16.7	16.7	54	5100	32	1840	43400	29.9	6100	21	2120	51700	
A 80 3_19.3	19.3	47	5000	27	2260	46000	25.9	6000	17.9	2530	54800	
A 80 3_20.9	20.9	43	5470	27	2030	46400	23.9	6500	17.9	2530	55400	
A 80 3_22.6	22.6	40	7100	33	6810	43900	22.1	8000	20.4	7000	53400	
A 80 3_24.5	24.5	37	7700	33	6800	44100	20.4	8000	18.8	7000	55300	
A 80 3_28.2	28.2	32	7550	28	6940	47000	17.7	8000	16.3	7000	58400	
A 80 3_30.6	30.6	29.4	7400	25	7000	49000	16.4	8000	15.1	7000	60400	
A 80 3_35.5	35.5	25.3	8000	23	6980	50600	14.1	8000	13.0	7000	63900	
A 80 3_38.5	38.5	23.4	8000	22	7000	52400	13.0	8000	12.0	7000	65000	
A 80 3_44.5	44.5	20.2	8000	18.6	7000	55400	11.2	8000	10.3	7000	65000	
A 80 3_48.2	48.2	18.7	8000	17.2	7000	57300	10.4	8000	9.6	7000	65000	
A 80 3_55.2	55.2	16.3	8000	15.0	7000	60300	9.1	8000	8.3	7000	65000	
A 80 3_59.8	59.8	15.1	8000	13.9	7000	62300	8.4	8000	7.7	7000	65000	
A 80 3_66.8	66.8	13.5	8000	12.4	7000	65000	7.5	8000	6.9	7000	65000	
A 80 3_72.4	72.4	12.4	8000	11.4	7000	65000	6.9	8000	6.4	7000	65000	
A 80 3_82.3	82.3	10.9	8000	10.1	7000	65000	6.1	8000	5.6	7000	65000	
A 80 3_89.2	89.2	10.1	8000	9.3	7000	65000	5.6	8000	5.2	7000	65000	
A 80 3_96.0	96.0	9.4	8000	8.6	7000	65000	5.2	8000	4.8	7000	65000	
A 80 3_104.0	104.0	8.7	8000	8.0	7000	65000	4.8	8000	4.4	7000	65000	
A 80 3_116.0	116.0	7.8	8000	7.1	7000	65000	4.3	8000	4.0	7000	65000	
A 80 3_125.6	125.6	7.2	8000	6.6	7000	65000	4.0	8000	3.7	7000	65000	
A 80 3_144.7	144.7	6.2	8000	5.7	7000	65000	3.5	8000	3.2	7000	65000	
A 80 3_156.8	156.8	5.7	8000	5.3	7000	65000	3.2	8000	2.9	7000	65000	
A 80 4_171.3	171.3	5.3	8000	4.9	2300	65000	2.9	8000	2.7	3500	65000	
A 80 4_214.7	214.7	4.2	8000	3.9	2470	65000	2.3	8000	2.2	3500	65000	
A 80 4_232.6	232.6	3.9	8000	3.6	2870	65000	2.1	8000	2.0	3500	65000	
A 80 4_277.3	277.3	3.2	8000	3.1	3000	65000	1.8	8000	1.7	3500	65000	
A 80 4_300.4	300.4	3.0	8000	2.8	3120	65000	1.7	8000	1.6	3500	65000	
A 80 4_354.0	354.0	2.5	8000	2.4	3100	65000	1.4	8000	1.3	3500	65000	
A 80 4_383.5	383.5	2.3	8000	2.2	3180	65000	1.3	8000	1.2	3500	65000	
A 80 4_442.1	442.1	2.0	8000	1.9	3160	65000	1.1	8000	1.1	3500	65000	
A 80 4_478.9	478.9	1.9	8000	1.8	3230	65000	1.0	8000	0.98	3500	65000	
A 80 4_560.5	560.5	1.6	8000	1.5	3210	65000	0.89	8000	0.84	3500	65000	
A 80 4_607.2	607.2	1.5	8000	1.4	3280	65000	0.82	8000	0.78	3500	65000	
A 80 4_703.5	703.5	1.3	8000	1.2	3260	65000	0.71	8000	0.67	3500	65000	
A 80 4_762.1	762.1	1.2	8000	1.1	3320	65000	0.66	8000	0.62	3500	65000	
A 80 4_829.5	829.5	1.1	8000	1.0	3280	65000	0.60	8000	0.57	3500	65000	
A 80 4_898.7	898.7	1.0	8000	0.94	3340	65000	0.56	8000	0.52	3500	65000	
A 80 4_1001	1001	0.90	8000	0.85	3300	65000	0.50	8000	0.47	3500	65000	
A 80 4_1085	1085	0.83	8000	0.78	3360	65000	0.46	8000	0.43	3500	65000	
A 80 4_1237	1237	0.73	8000	0.68	3310	65000	0.40	8000	0.38	3500	65000	
A 80 4_1340	1340	0.67	8000	0.63	3370	65000	0.37	8000	0.35	3500	65000	
A 80 4_1438	1438	0.63	8000	0.59	3330	65000	0.35	8000	0.33	3500	65000	
A 80 4_1558	1558	0.58	8000	0.54	3390	65000	0.32	8000	0.30	3500	65000	

(—) Nehmen Sie bitte Kontakt mit unserem technischen Service auf und benennen die Querkraftsdaten (Drehrichtung, Orientierung, Anordnung)

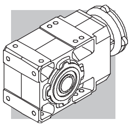

A 90 14000 Nm

	i	n_1 = 2800 min^{-1}					n_1 = 1400 min^{-1}					
		n_2 min^{-1}	M_{n2} Nm	P_{n1} kW	R_{n1} N	R_{n2} N	n_2 min^{-1}	M_{n2} Nm	P_{n1} kW	R_{n1} N	R_{n2} N	
A 90 3_9.7	9.7	289	7800	260	2440	27600	145	9050	151	5520	35000	315
A 90 3_10.5	10.5	267	8350	257	2620	27700	134	9800	151	5530	34900	
A 90 3_12.6	12.6	221	8500	217	2700	29800	111	10450	133	4790	36700	
A 90 3_13.7	13.7	204	8050	189	4670	31800	102	11150	131	5060	36900	
A 90 3_15.6	15.6	180	8900	184	3240	32000	90	10950	113	5410	39400	
A 90 3_16.9	16.9	166	9650	184	3230	31900	83	11850	113	5440	39300	
A 90 3_19.4	19.4	144	9400	156	3160	34300	72	11550	96	5350	42300	
A 90 3_21.0	21.0	133	10150	156	3210	34300	67	12400	95	5510	42400	
A 90 3_22.3	22.3	126	9850	143	9660	35700	63	12150	88	12200	43900	
A 90 3_24.1	24.1	116	10700	143	9660	35500	58	13150	88	12200	43800	
A 90 3_29.1	29.1	96	10550	117	9800	38900	48	13000	72	12400	47900	
A 90 3_31.5	31.5	89	11450	117	9800	38800	44	14000	72	12400	47900	
A 90 3_35.8	35.8	78	11150	100	9910	41600	39	13750	62	12500	51100	
A 90 3_38.8	38.8	72	12100	100	9900	41500	36	14000	58	12700	52700	
A 90 3_44.6	44.6	63	11800	85	9920	44600	31	14000	51	12700	56000	
A 90 3_48.3	48.3	58	12800	85	9920	44500	29.0	14000	47	12800	58000	
A 90 3_55.0	55.0	51	12550	73	9960	47500	25.4	14000	41	12800	61400	
A 90 3_59.6	59.6	47	13550	73	9970	47500	23.5	14000	38	13000	63500	
A 90 3_68.8	68.8	41	13350	63	9960	50900	20.4	14000	33	13000	67400	
A 90 3_74.5	74.5	38	14000	61	10000	51700	18.8	14000	30	13100	69700	
A 90 3_80.4	80.4	35	13900	56	9920	53500	17.4	14000	28	13000	71900	
A 90 3_87.1	87.1	32	14000	52	10100	55500	16.1	14000	26	13200	74300	
A 90 3_98.6	98.6	28.4	14000	46	9990	58500	14.2	14000	23	13100	75000	
A 90 3_106.8	106.8	26.2	14000	42	10100	60600	13.1	14000	21	13300	75000	
A 90 3_116.9	116.9	24.0	14000	39	10100	63000	12.0	14000	19.3	13200	75000	
A 90 3_126.6	126.6	22.1	10650	27	10600	71400	11.1	13150	16.7	13400	75000	
A 90 3_139.4	139.4	20.1	10350	24	10600	74500	10.0	12750	14.7	13400	75000	
A 90 3_151.0	151.0	18.5	11200	24	10600	75000	9.3	13800	14.7	13400	75000	
A 90 4_166.1	166.1	16.9	14000	28	—	75000	8.4	14000	13.9	—	75000	
A 90 4_180.0	180.0	15.6	14000	26	—	75000	7.8	14000	12.8	—	75000	
A 90 4_209.0	209.0	13.4	14000	22	—	75000	6.7	14000	11.0	—	75000	
A 90 4_226.4	226.4	12.4	14000	20	—	75000	6.2	14000	10.2	—	75000	
A 90 4_281.4	281.4	9.9	14000	16.4	—	75000	5.0	14000	8.2	—	75000	
A 90 4_304.9	304.9	9.2	14000	15.1	—	75000	4.6	14000	7.6	—	75000	
A 90 4_355.8	355.8	7.9	14000	13.0	—	75000	3.9	14000	6.5	—	75000	
A 90 4_385.4	385.4	7.3	14000	12.0	—	75000	3.6	14000	6.0	680	75000	
A 90 4_449.2	449.2	6.2	14000	10.3	—	75000	3.1	14000	5.1	—	75000	
A 90 4_486.6	486.6	5.8	14000	9.5	—	75000	2.9	14000	4.7	950	75000	
A 90 4_555.3	555.3	5.0	14000	8.3	—	75000	2.5	14000	4.2	740	75000	
A 90 4_601.6	601.6	4.7	14000	7.7	—	75000	2.3	14000	3.8	1200	75000	
A 90 4_707.9	707.9	4.0	14000	6.5	—	75000	2.0	14000	3.3	1050	75000	
A 90 4_766.9	766.9	3.7	14000	6.0	—	75000	1.8	14000	3.0	1490	75000	
A 90 4_865.1	865.1	3.2	14000	5.3	—	75000	1.6	14000	2.7	1170	75000	
A 90 4_937.2	937.2	3.0	14000	4.9	—	75000	1.5	14000	2.5	1590	75000	
A 90 4_1025	1025	2.7	14000	4.5	—	75000	1.4	14000	2.2	1330	75000	
A 90 4_1111	1111	2.5	14000	4.2	—	75000	1.3	14000	2.1	1740	75000	
A 90 4_1222	1222	2.3	14000	3.8	—	75000	1.1	14000	1.9	1380	75000	
A 90 4_1324	1324	2.1	14000	3.5	—	75000	1.1	14000	1.7	1790	75000	
A 90 4_1507	1507	1.9	14000	3.1	—	75000	0.93	14000	1.5	1440	75000	
A 90 4_1632	1632	1.7	14000	2.8	—	75000	0.86	14000	1.4	1840	75000	

(—) Nehmen Sie bitte Kontakt mit unserem technischen Service auf und benennen die Querkraftsdaten (Drehrichtung, Orientierung, Anordnung)

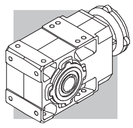

A 90 14000 Nm

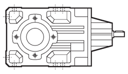	i	n_1 = 900 min^{-1}					n_1 = 500 min^{-1}					
		n_2 min^{-1}	M_{n2} Nm	P_{n1} kW	R_{n1} N	R_{n2} N	n_2 min^{-1}	M_{n2} Nm	P_{n1} kW	R_{n1} N	R_{n2} N	
A 90 3_9.7	9.7	93	9050	97	9800	42300	52	9050	54	15000	53700	315
A 90 3_10.5	10.5	86	9800	97	9810	42500	48	9800	54	15000	54200	
A 90 3_12.6	12.6	71	11800	97	6720	42100	40	11800	54	13500	54500	
A 90 3_13.7	13.7	66	12750	96	6770	42100	37	12800	54	13500	54600	
A 90 3_15.6	15.6	58	11550	77	8730	46700	32	11550	43	15000	59900	
A 90 3_16.9	16.9	53	12500	77	8750	46800	29.6	12500	43	15000	60300	
A 90 3_19.4	19.4	46	11550	62	9630	51400	25.8	11550	34	15000	65400	
A 90 3_21.0	21.0	43	12400	61	9790	51700	23.8	12400	34	15000	66100	
A 90 3_22.3	22.3	40	13850	64	14200	50200	22.5	14000	36	15000	64700	
A 90 3_24.1	24.1	37	14000	60	14400	51900	20.7	14000	33	15000	66900	
A 90 3_29.1	29.1	31	14000	50	14600	56200	17.2	14000	28	15000	72100	
A 90 3_31.5	31.5	28.6	14000	46	14800	58400	15.9	14000	26	15000	74700	
A 90 3_35.8	35.8	25.1	14000	40	14900	61700	14.0	14000	23	15000	75000	
A 90 3_38.8	38.8	23.2	14000	37	15000	63900	12.9	14000	21	15000	75000	
A 90 3_44.6	44.6	20.2	14000	33	15000	67700	11.2	14000	18.1	15000	75000	
A 90 3_48.3	48.3	18.6	14000	30	15000	70000	10.4	14000	16.7	15000	75000	
A 90 3_55.0	55.0	16.4	14000	26	15000	73800	9.1	14000	14.6	15000	75000	
A 90 3_59.6	59.6	15.1	14000	24	15000	75000	8.4	14000	13.5	15000	75000	
A 90 3_68.8	68.8	13.1	14000	21	15000	75000	7.3	14000	11.7	15000	75000	
A 90 3_74.5	74.5	12.1	14000	19.5	15000	75000	6.7	14000	10.8	15000	75000	
A 90 3_80.4	80.4	11.2	14000	18.0	15000	75000	6.2	14000	10.0	15000	75000	
A 90 3_87.1	87.1	10.3	14000	16.7	15000	75000	5.7	14000	9.3	15000	75000	
A 90 3_98.6	98.6	9.1	14000	14.7	15000	75000	5.1	14000	8.2	15000	75000	
A 90 3_106.8	106.8	8.4	14000	13.6	15000	75000	4.7	14000	7.5	15000	75000	
A 90 3_116.9	116.9	7.7	14000	12.4	15000	75000	4.3	14000	6.9	15000	75000	
A 90 3_126.6	126.6	7.1	14000	11.4	15000	75000	3.9	14000	6.4	15000	75000	
A 90 3_139.4	139.4	6.5	14000	10.4	15000	75000	3.6	14000	5.8	15000	75000	
A 90 3_151.0	151.0	6.0	14000	9.6	15000	75000	3.3	14000	5.3	15000	75000	
A 90 4_166.1	166.1	5.4	14000	8.9	—	75000	3.0	14000	5.0	700	75000	
A 90 4_180.0	180.0	5.0	14000	8.2	—	75000	2.8	14000	4.6	1400	75000	
A 90 4_209.0	209.0	4.3	14000	7.1	—	75000	2.4	14000	3.9	1500	75000	
A 90 4_226.4	226.4	4.0	14000	6.5	500	75000	2.2	14000	3.6	2100	75000	
A 90 4_281.4	281.4	3.2	14000	5.3	690	75000	1.8	14000	2.9	2300	75000	
A 90 4_304.9	304.9	3.0	14000	4.9	1230	75000	1.6	14000	2.7	2900	75000	
A 90 4_355.8	355.8	2.5	14000	4.2	1240	75000	1.4	14000	2.3	2900	75000	
A 90 4_385.4	385.4	2.3	14000	3.8	1750	75000	1.3	14000	2.1	3400	75000	
A 90 4_449.2	449.2	2.0	14000	3.3	1540	75000	1.1	14000	1.8	3200	75000	
A 90 4_486.6	486.6	1.8	14000	3.0	2020	75000	1.0	14000	1.7	3500	75000	
A 90 4_555.3	555.3	1.6	14000	2.7	1810	75000	0.90	14000	1.5	3500	75000	
A 90 4_601.6	601.6	1.5	14000	2.5	2270	75000	0.83	14000	1.4	3500	75000	
A 90 4_707.9	707.9	1.3	14000	2.1	2120	75000	0.71	14000	1.2	3500	75000	
A 90 4_766.9	766.9	1.2	14000	1.9	2560	75000	0.65	14000	1.1	3500	75000	
A 90 4_865.1	865.1	1.0	14000	1.7	2240	75000	0.58	14000	0.95	3500	75000	
A 90 4_937.2	937.2	0.96	14000	1.6	2660	75000	0.53	14000	0.88	3500	75000	
A 90 4_1025	1025	0.88	14000	1.4	2400	75000	0.49	14000	0.80	3500	75000	
A 90 4_1111	1111	0.81	14000	1.3	2810	75000	0.45	14000	0.74	3500	75000	
A 90 4_1222	1222	0.74	14000	1.2	2450	75000	0.41	14000	0.67	3500	75000	
A 90 4_1324	1324	0.68	14000	1.1	2860	75000	0.38	14000	0.62	3500	75000	
A 90 4_1507	1507	0.60	14000	0.98	2410	75000	0.33	14000	0.55	3500	75000	
A 90 4_1632	1632	0.55	14000	0.91	2910	75000	0.31	14000	0.50	3500	75000	

(—) Nehmen Sie bitte Kontakt mit unserem technischen Service auf und benennen die Querkraftsdaten (Drehrichtung, Orientierung, Anordnung)

40 ANBAUMÖGLICHKEITEN

In den folgenden Tabellen werden die von den Größen her gesehenen möglichen Passungen angegeben.

Die angemessene Getriebewahl muss unter Befolgung der im Paragraph 12 gegebenen Anleitungen und auf der Grundlage der Auswahltabelle der technischen Daten erfolgen.

(C 40)

		IEC_ BN (IM B5)											
		BN										IEC	
P_{n1}(#) [kW]	2p	0.37	0.75	1.5	2.2	4	4	9.2	18.5	22	30	45	55
	4p	0.25	0.55	1.1	1.85	3	4	9.2	15	22	30	45	55
	6p	0.12	0.37	0.75	1.1	1.85	2.2	5.5	11	15	18.5	30	37
		P63	**P71**	**P80**	**P90**	**P100**	**P112**	**P132**	**P160**	**P180**	**P200**	**P225**	**P250**
A 05 2		5.5_91.6	5.5_51.3	5.5_51.3									
A 10 2		5.5_91.6	5.5_91.6	5.5_65.9	5.5_65.9	5.5_65.9	5.5_65.9						
A 20 2		7.3_92.3 ⊖(10.3)	7.3_92.3 ⊖(10.3)	5.4_79.9	5.4_79.9	5.4_79.9	5.4_79.9						
A 20 3		109.2_380.9	109.2_380.9	109.2_380.9	109.2_380.9	109.2_380.9	109.2_380.9						
A 30 2		9.3_97.5 ⊖(10.5 ; 13.6_16.3)	9.3_97.5 ⊖(10.5 ; 13.6_16.3)	5.4_97.5	5.4_97.5	5.4_97.5	5.4_97.5						
A 30 3		109.1_400.8	109.1_400.8	109.1_400.8	109.1_400.8	109.1_400.8	109.1_400.8						
A 35 2		9.3_95.6 ⊖(13.1_20.4)	9.3_95.6 ⊖(13.1_20.4)	5.4_95.6	5.4_95.6	5.4_95.6	5.4_95.6	5.4_11.8					
A 35 3		105.5_393.2	105.5_393.2	105.5_393.2	105.5_393.2	105.5_393.2	105.5_393.2						
A 41 2		11.7_79.2 ⊖(13.8_17.8)	11.7_79.2 ⊖(13.8_17.8)	5.2_79.2	5.2_79.2	5.2_79.2	5.2_79.2	5.2_45.1					
A 41 3		92.8_376.8	92.8_376.8	92.8_376.8	92.8_376.8	92.8_376.8	92.8_376.8						
A 50 2		20.9	20.9	7.7_20.9	7.7_20.9	7.7_20.9	7.7_20.9	7.7_20.9	7.7_20.9	7.7_20.9			
A 50 3		51.7_190.6	51.7_190.6	24.0_190.6	24.0_190.6	24.0_190.6	24.0_190.6	24.0_109.4	24.0_109.4	24.0_109.4			
A 50 4	i =	211.0_778.2	211.0_778.2	211.0_778.2	211.0_778.2	211.0_778.2	211.0_778.2						
A 55 2				13.1_19.2	13.1_19.2	13.1_19.2	13.1_19.2	4.9_19.2	4.9_19.2	4.9_19.2			
A 55 3		64.3_194.2	64.3_194.2	23.8_194.2	23.8_194.2	23.8_194.2	23.8_194.2	23.8_123.9	23.8_123.9	23.8_123.9			
A 55 4		208.1_793.0	208.1_793.0	208.1_793.0	208.1_793.0	208.1_793.0	208.1_793.0						
A 60 2				10.3_20.6	10.3_20.6	10.3_20.6	10.3_20.6	7.9_20.6	7.9_20.6	7.9_20.6			
A 60 3		65.0_185.8	65.0_185.8	25.7_185.8	25.7_185.8	25.7_185.8	25.7_185.8	25.7_133.3	25.7_133.3	25.7_133.3			
A 60 4		208.7_755.4	208.7_755.4	208.7_755.4	208.7_755.4	208.7_755.4	208.7_755.4						
A 70 3				66.9_153.7	66.9_153.7	66.9_153.7	66.9_153.7	15.4_153.7 ⊖(23.5_30.1)	9.4_153.7	9.4_153.7	9.4_38.4 ⊖(19.7_21.3)		
A 70 4		292.0_1715	292.0_1715	169.8_1715	169.8_1715	169.8_1715	169.8_1715	169.8_644.6					
A 80 3				82.3_156.8	82.3_156.8	82.3_156.8	82.3_156.8	19.3_156.8 ⊖(22.6_38.5)	12.3_156.8 ⊖(22.6_24.5)	9.8_156.8	9.8_104.0	9.8_104.0	
A 80 4		354.0_1558	354.0_1558	171.3_1558	171.3_1558	171.3_1558	171.3_1558	171.3_762.1					
A 90 3				98.6_151.0	98.6_151.0	98.6_151.0	98.6_151.0	55.0_151.0	19.4_151.0 ⊖(22.3_38.8)	9.7_151.0	9.7_126.6	9.7_126.6	9.7_126.6
A 90 4		449.2_1632	449.2_1632	166.1_1632	166.1_1632	166.1_1632	166.1_1632	166.1_937.2	166.1_937.2	166.1_937.2			

(#) P_{n1} = max. installierbare Leistung für IEC Motoradapter P_

(C 41)

		M					
		M05	**M1**	**M2**	**M3**	**M4**	**M5**
A 05 2	**i =**	5.5_91.6	5.5_51.3	5.5_65.9			
A 10 2		5.5_91.6	5.5_51.3	5.5_65.9	5.5_65.9		
A 20 2		7.3_92.3 ⊖ (10.3)	7.3_63.1 ⊖ (10.3)	5.4_79.9	5.4_79.9		
A 20 3		109.2_380.9	109.2_380.9	109.2_380.9	109.2_380.9		
A 30 2			9.3_76.5 ⊖ (10.5 ; 13.6_16.3)	5.4_97.5	5.4_97.5		
A 30 3		109.1_400.8	109.1_400.8	109.1_400.8	109.1_400.8		
A 35 2			9.3_95.6 ⊖ (13.1_20.4)	5.4_95.6	5.4_95.6	5.4_11.8	
A 35 3		105.5_393.2	105.5_393.2	105.5_393.2	105.5_393.2		
A 41 2			11.7_79.2 ⊖ (13.8_17.8)	5.2_79.2	5.2_79.2	5.2_45.1	
A 41 3		92.8_376.8	92.8_376.8	92.8_376.8	92.8_376.8		
A 50 2			20.9	7.7_20.9	7.7_20.9	7.7_20.9	7.7_20.9
A 50 3			51.7_190.6	24.0_190.6	24.0_190.6	24.0_109.4	24.0_109.4
A 50 4			211.0_778.2	211.0_778.2	211.0_778.2		
A 55 2				13.1_19.2	13.1_19.2	4.9_19.2	4.9_19.2
A 55 3			64.3_194.2	23.8_194.2	23.8_194.2	23.8_123.9	23.8_123.9
A 55 4			208.1_793.0	208.1_793.0	208.1_793.0		
A 60 2				10.3_20.6	10.3_20.6	7.9_20.6	7.9_20.6
A 60 3				25.7_185.8	25.7_185.8	25.7_133.3	25.7_133.3
A 60 4			208.7_755.4	208.7_755.4	208.7_755.4		
A 70 3				66.9_153.7	66.9_153.7	15.4_153.7 ⊖ (23.5_30.1)	15.4_153.7 ⊖ (23.5_30.1)
A 70 4			292.0_1715	169.8_1715	169.8_1715	169.8_644.6	
A 80 3					82.3_156.8	19.3_156.8 ⊖ (22.6_38.5)	19.3_156.8 ⊖ (22.6_38.5)
A 80 4			354.0_1558	171.3_1558	171.3_1558	171.3_762.1	
A 90 3					98.6_151.0	55.0_151.0	55.0_151.0
A 90 4			449.2_1632	166.1_1632	166.1_1632	166.1_937.2	

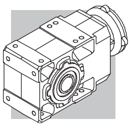

Für viele Servomotoren der wichtigsten Hersteller stehen passende Motoradapter für die Baugrößen A05…A60 zur Verfügung. Die Abmessungen der Servomotor-Eingänge entnehmen Sie bitte dem Zeichnungsteil der verschiedenen Baugrößen. Der Bezeichnungszusatz **SK** steht für Eingänge mit herkömmlicher Passfedernut. Der Zusatz **SC** bezieht sich stattdessen auf Eingänge mit Klemmvorrichtung

(C 42)

		SERVO INPUT					
		SK40A	**SK60A**	**SK60B**	**SK80A**	**SK80B**	**SK80C**
		SC40A	**SC60A**	**SC60B**	**SC80A**	**SC80B**	**SC80C**
A 05 2	**i =**	5.5_91.6	5.5_91.6	5.5_51.3	5.5_51.3		
A 10 2			5.5_91.6	5.5_51.3	5.5_51.3		5.5_65.9
A 20 2			7.3_92.3 ⊖ (10.3)	7.3_63.1 ⊖ (10.3)	7.3_63.1 ⊖ (10.3)		5.4_79.9
A 20 3			109.2_380.9	109.2_380.9	109.2_380.9		109.2_380.9
A 30 2			9.3_97.5 ⊖ (10.5 ; 13.6_16.3)	9.3_76.5 ⊖ (10.5 ; 13.6_16.3)	9.3_76.5 ⊖ (10.5 ; 13.6_16.3)		5.4_97.5
A 30 3			109.1_400.8	109.1_400.8	109.1_400.8		109.1_400.8
A 35 2			9.3_95.6 ⊖ (13.1_20.4)	9.3_95.6 ⊖ (13.1_20.4)	9.3_95.6 ⊖ (13.1_20.4)		5.4_95.6
A 35 3			105.5_393.2	105.5_393.2	105.5_393.2		105.5_393.2
A 41 2						11.7_79.2 ⊖ (13.8_17.8)	5.2_79.2
A 41 3			92.8_376.8	92.8_376.8	92.8_376.8		92.8_376.8
A 50 2						20.9	7.7_20.9
A 50 3						51.7_190.6	24.0_190.6
A 50 4							211.0_778.2
A 55 2							13.1_19.2
A 55 3						64.3_194.2	23.8_194.2
A 55 4							208.1_793.0
A 60 2							10.3_20.6
A 60 3							25.7_185.8
A 60 4						208.7_755.4	208.7_755.4

(C 43)

		SERVO INPUT								
		SK95A	**SK95B**	**SK95C**	**SK110A**	**SK110B**	**SK130A**	**SK130B**	**SK180A**	**SK180B**
		SC95A	**SC95B**	**SC95C**	**SC110A**	**SC110B**	**SC130A**	**SC130B**	**SC180A**	**SC180B**
A 10 2	**i =**	5.5_51.3	5.5_65.9	5.5_65.9	5.5_65.9	5.5_65.9				
A 20 2		7.3_63.1 ⊖ (10.3)	5.4_79.9	5.4_79.9	5.4_79.9	5.4_79.9				
A 20 3		109.2_380.9	109.2_380.9	109.2_380.9	109.2_380.9	109.2_380.9				
A 30 2		9.3_76.5 ⊖ (10.5 ; 13.6_16.3)	5.4_97.5	5.4_97.5	5.4_97.5	5.4_97.5	5.4_97.5			
A 30 3		109.1_400.8	109.1_400.8	109.1_400.8	109.1_400.8	109.1_400.8				
A 35 2		9.3_95.6 ⊖ (13.1_20.4)	5.4_95.6	5.4_95.6	5.4_95.6	5.4_95.6	5.4_95.6			
A 35 3		105.5_393.2	105.5_393.2	105.5_393.2	105.5_393.2	105.5_393.2				
A 41 2		11.7_79.2 ⊖ (13.8_17.8)	5.2_79.2	5.2_79.2	5.2_79.2	5.2_79.2	5.2_79.2	5.2_45.1	5.2_45.1	5.2_45.1
A 41 3		92.8_376.8	92.8_376.8	92.8_376.8	92.8_376.8	92.8_376.8				
A 50 2		20.9	7.7_20.9	7.7_20.9	7.7_20.9	7.7_20.9	7.7_20.9	7.7_20.9	7.7_20.9	7.7_20.9
A 50 3		51.7_190.6	24.0_190.6	24.0_190.6	24.0_190.6	24.0_190.6	24.0_190.6	24.0_109.4	24.0_109.4	24.0_109.4
A 50 4		211.0_778.2	211.0_778.2	211.0_778.2	211.0_778.2	211.0_778.2	211.0_778.2			
A 55 2			13.1_19.2	13.1_19.2	13.1_19.2	13.1_19.2	13.1_19.2	4.9_19.2	4.9_19.2	4.9_19.2
A 55 3		64.3_194.2	23.8_194.2	23.8_194.2	23.8_194.2	23.8_194.2	23.8_194.2	23.8_123.9	23.8_123.9	23.8_123.9
A 55 4		208.1_793.0	208.1_793.0	208.1_793.0	208.1_793.0	208.1_793.0	208.1_793.0			
A 60 2			10.3_20.6	10.3_20.6	10.3_20.6	10.3_20.6	10.3_20.6	7.9_20.6	7.9_20.6	7.9_20.6
A 60 3		65.0_185.8	25.7_185.8	25.7_185.8	25.7_185.8	25.7_185.8	25.7_185.8	25.7_133.3	25.7_133.3	25.7_133.3
A 60 4		208.7_755.4	208.7_755.4	208.7_755.4	208.7_755.4	208.7_755.4	208.7_755.4			

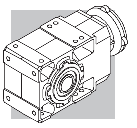

41 TRÄGHEITSMOMENT

Die in den folgenden Tabellen angegebenen Trägheitsmomente J_r [kgm²] beziehen sich auf die Getriebeantriebsachse. Um das Lesen der Tabellen zu erleichtern, werden folgende Symbole verwendet:

	Daten beziehen sich auf Kompaktgetriebe ohne Motor. Um das Gesamtträgheitsmoment des Getriebemotors zu ermitteln, muss nur das Trägheitsmoment des Getriebes mit dem Trägheitsmoment des entsprechenden Motors addiert werden (Wert Elektromotorenauswahltabellen entnehmen).
IEC	Nur Getriebe vorbereitet für IEC-Motor (IEC-Größe...).
	Dieses Symbol bezieht sich auf Getriebewerte.
SERVO	Nur Getriebe vorbereitet für Servomotor.

A 05

	i	J (•10⁻⁴) [kgm²]				
			IEC			
			63	71	80	
A 05 2_5.5	5.5	0.72	0.99	1.0	1.4	—
A 05 2_6.3	6.3	0.56	0.83	0.86	1.2	—
A 05 2_7.2	7.2	0.48	0.74	0.77	1.1	—
A 05 2_8.5	8.5	0.36	0.63	0.65	1.0	—
A 05 2_9.6	9.6	0.29	0.55	0.58	0.92	—
A 05 2_10.6	10.6	0.50	0.77	0.80	1.1	—
A 05 2_12.3	12.3	0.18	0.45	0.48	0.82	—
A 05 2_13.9	13.9	0.35	0.62	0.65	0.99	—
A 05 2_16.4	16.4	0.27	0.54	0.57	0.91	—
A 05 2_18.6	18.6	0.22	0.49	0.51	0.86	—
A 05 2_21.4	21.4	0.16	0.43	0.46	0.80	—
A 05 2_23.8	23.8	0.14	0.41	0.43	0.78	—
A 05 2_25.5	25.5	0.13	0.39	0.42	0.76	—
A 05 2_28.6	28.6	0.11	0.38	0.40	0.75	—
A 05 2_32.2	32.2	0.09	0.36	0.39	0.73	—
A 05 2_35.1	35.1	0.08	0.35	0.37	0.72	—
A 05 2_40.9	40.9	0.07	0.33	0.36	0.70	—
A 05 2_45.4	45.4	0.05	0.32	0.35	0.69	—
A 05 2_51.3	51.3	0.04	0.31	0.34	0.68	—
A 05 2_58.6	58.6	0.04	0.31	—	—	—
A 05 2_65.9	65.9	0.03	0.30	—	—	—
A 05 2_76.4	76.4	0.02	0.29	—	—	—
A 05 2_91.6	91.6	0.02	0.28	—	—	—

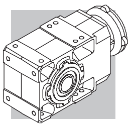

A 05

	i	J (•10^{-4}) [kgm^2]					
		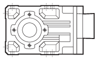 SERVO					
		40A		60A		60B 80A	
		SK	SC	SK	SC	SK	SC
A 05 2_5.5	5.5	0.89	1.1	0.99	1.3	1.0	1.4
A 05 2_6.3	6.3	0.73	0.89	0.83	1.1	0.86	1.3
A 05 2_7.2	7.2	0.65	0.81	0.74	1.0	0.77	1.2
A 05 2_8.5	8.5	0.53	0.69	0.63	0.89	0.65	1.1
A 05 2_9.6	9.6	0.46	0.62	0.55	0.81	0.58	1.0
A 05 2_10.6	10.6	0.67	0.83	0.77	1.0	0.80	1.2
A 05 2_12.3	12.3	0.35	0.51	0.45	0.71	0.48	0.92
A 05 2_13.9	13.9	0.52	0.68	0.62	0.88	0.65	1.1
A 05 2_16.4	16.4	0.44	0.60	0.54	0.80	0.57	1.0
A 05 2_18.6	18.6	0.39	0.55	0.49	0.75	0.51	0.95
A 05 2_21.4	21.4	0.33	0.49	0.43	0.69	0.46	0.90
A 05 2_23.8	23.8	0.31	0.47	0.41	0.67	0.43	0.87
A 05 2_25.5	25.5	0.30	0.46	0.39	0.65	0.42	0.86
A 05 2_28.6	28.6	0.28	0.44	0.38	0.64	0.40	0.84
A 05 2_32.2	32.2	0.26	0.42	0.36	0.62	0.39	0.83
A 05 2_35.1	35.1	0.25	0.41	0.35	0.61	0.37	0.81
A 05 2_40.9	40.9	0.24	0.40	0.33	0.59	0.36	0.80
A 05 2_45.4	45.4	0.22	0.38	0.32	0.58	0.35	0.79
A 05 2_51.3	51.3	0.21	0.37	0.31	0.57	0.34	0.78
A 05 2_58.6	58.6	0.21	0.37	0.31	0.57	—	—
A 05 2_65.9	65.9	0.20	0.36	0.30	0.56	—	—
A 05 2_76.4	76.4	0.19	0.35	0.29	0.55	—	—
A 05 2_91.6	91.6	0.19	0.35	0.28	0.54	—	—

A 10

	i	**J** (•10^{-4}) [kgm^2]							
		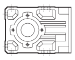	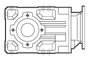 **IEC**						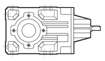
			63	**71**	**80**	**90**	**100**	**112**	
A 10 2_5.5	5.5	1.0	2.5	2.5	3.9	3.8	5.1	5.1	1.8
A 10 2_6.3	6.3	0.80	2.3	2.3	3.7	3.6	4.9	4.9	1.6
A 10 2_7.2	7.2	0.60	2.1	2.1	3.5	3.4	4.7	4.7	1.5
A 10 2_8.5	8.5	0.45	1.9	1.9	3.3	3.1	4.5	4.5	1.4
A 10 2_9.6	9.6	0.30	1.8	1.8	3.2	3.1	4.4	4.4	1.3
A 10 2_10.6	10.6	0.50	2.0	2.0	3.4	3.3	4.6	4.6	1.4
A 10 2_12.3	12.3	0.20	1.7	1.7	3.1	3.0	4.3	4.3	1.1
A 10 2_13.9	13.9	0.30	1.8	1.8	3.2	3.1	4.6	4.6	1.2
A 10 2_16.4	16.4	0.25	1.7	1.7	3.1	3.0	4.3	4.3	1.1
A 10 2_18.6	18.6	0.20	1.7	1.7	3.1	3.0	4.3	4.3	1.0
A 10 2_21.4	21.4	0.15	1.6	1.6	3.0	2.9	4.2	4.2	1.0
A 10 2_23.8	23.8	0.10	1.6	1.6	3.0	2.9	4.2	4.2	1.0
A 10 2_25.5	25.5	0.10	1.6	1.6	3.0	2.9	4.2	4.2	1.0
A 10 2_28.6	28.6	0.10	1.6	1.6	3.0	2.9	4.2	4.2	0.90
A 10 2_32.2	32.2	0.08	1.6	1.6	3.0	2.9	4.2	4.2	0.90
A 10 2_35.1	35.1	0.07	1.6	1.6	3.0	2.9	4.2	4.2	0.90
A 10 2_40.9	40.9	0.06	1.6	1.6	3.0	2.9	4.2	4.2	0.90
A 10 2_45.4	45.4	0.05	1.6	1.6	3.0	2.9	4.2	4.2	0.90
A 10 2_51.3	51.3	0.03	1.5	1.5	2.9	2.8	4.1	4.1	0.90
A 10 2_58.6	58.6	0.03	1.5	1.5	2.9	2.8	4.1	4.1	0.90
A 10 2_65.9	65.9	0.02	1.5	1.5	2.9	2.8	4.1	4.1	0.90
A 10 2_76.4	76.4	0.02	1.5	1.5	—	—	—	—	0.90
A 10 2_91.6	91.6	0.01	1.5	1.5	—	—	—	—	0.90

A 10

		J (•10^{-4}) [kgm^2]									
		SERVO									
	i	60A		60B 80A		95A		80C 95B 110A		95C 110B	
		SK	SC	SK	SC	SK	SC	SK	SC	SK	SC
A 10 2_5.5	5.5	1.3	1.5	1.3	1.7	3.8	4.3	3.9	4.4	3.8	4.8
A 10 2_6.3	6.3	1.1	1.3	1.1	1.5	3.6	4.1	3.7	4.2	3.6	4.6
A 10 2_7.2	7.2	0.87	1.1	0.89	1.3	3.4	3.9	3.5	4.0	3.4	4.4
A 10 2_8.5	8.5	0.72	0.98	0.74	1.2	3.3	3.7	3.3	3.8	3.1	4.1
A 10 2_9.6	9.6	0.57	0.83	0.59	1.0	3.1	3.6	3.2	3.7	3.1	4.1
A 10 2_10.6	10.6	0.77	1.0	0.79	1.2	3.3	3.8	3.4	3.9	3.3	4.3
A 10 2_12.3	12.3	0.47	0.73	0.49	0.93	3.0	3.5	3.1	3.6	3.0	4.0
A 10 2_13.9	13.9	0.57	0.83	0.59	1.0	3.1	3.6	3.2	3.7	3.1	4.1
A 10 2_16.4	16.4	0.52	0.78	0.54	0.98	3.1	3.5	3.1	3.6	3.0	4.0
A 10 2_18.6	18.6	0.47	0.73	0.49	0.93	3.0	3.5	3.1	3.6	3.0	4.0
A 10 2_21.4	21.4	0.42	0.68	0.44	0.88	3.0	3.4	3.0	3.5	2.9	3.9
A 10 2_23.8	23.8	0.37	0.63	0.39	0.83	2.9	3.4	3.0	3.5	2.9	3.9
A 10 2_25.5	25.5	0.37	0.63	0.39	0.83	2.9	3.4	3.0	3.5	2.9	3.9
A 10 2_28.6	28.6	0.37	0.63	0.39	0.83	2.9	3.4	3.0	3.5	2.9	3.9
A 10 2_32.2	32.2	0.35	0.61	0.37	0.81	2.9	3.3	3.0	3.5	2.9	3.9
A 10 2_35.1	35.1	0.34	0.60	0.36	0.80	2.9	3.3	3.0	3.5	2.9	3.9
A 10 2_40.9	40.9	0.33	0.59	0.35	0.79	2.9	3.3	3.0	3.5	2.9	3.9
A 10 2_45.4	45.4	0.32	0.58	0.34	0.78	2.9	3.3	3.0	3.5	2.9	3.9
A 10 2_51.3	51.3	0.30	0.56	0.32	0.76	2.9	3.3	2.9	3.4	2.8	3.8
A 10 2_58.6	58.6	0.30	0.56	—	—	—	—	2.9	3.4	2.8	3.8
A 10 2_65.9	65.9	0.29	0.55	—	—	—	—	2.9	3.4	2.8	3.8
A 10 2_76.4	76.4	0.29	0.55	—	—	—	—	—	—	—	—
A 10 2_91.6	91.6	0.28	0.54	—	—	—	—	—	—	—	—

A 20

	i	**J** ($\cdot 10^{-4}$) [kgm^2]							
		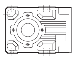	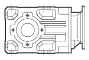 IEC						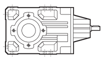
			63	**71**	**80**	**90**	**100**	**112**	
A 20 2_5.4	5.4	2.4	—	—	5.3	5.2	6.5	6.5	4.3
A 20 2_6.5	6.5	1.9	—	—	4.8	4.7	6.0	6.0	3.8
A 20 2_7.3	7.3	1.4	2.9	2.9	4.3	4.2	5.5	5.5	3.3
A 20 2_8.4	8.4	1.1	2.6	2.6	4.0	3.9	5.2	5.2	3.0
A 20 2_9.4	9.4	0.90	2.4	2.4	3.8	3.7	5.0	5.0	2.8
A 20 2_10.3	10.3	1.2	—	—	4.1	4.0	5.3	5.3	3.0
A 20 2_12.0	12.0	0.50	2.0	2.0	3.4	3.3	4.6	4.6	2.4
A 20 2_14.1	14.1	0.70	2.2	2.2	3.6	3.5	4.8	4.8	2.6
A 20 2_16.2	16.2	0.55	2.0	2.0	3.4	3.3	4.6	4.6	2.5
A 20 2_18.1	18.1	0.40	1.9	1.9	3.3	3.2	4.5	4.5	2.4
A 20 2_21.2	21.2	0.35	1.8	1.8	3.2	3.1	4.4	4.4	2.3
A 20 2_23.1	23.1	0.30	1.8	1.8	3.2	3.1	4.4	4.4	2.2
A 20 2_26.5	26.5	0.25	1.7	1.7	3.1	3.0	4.3	4.3	2.1
A 20 2_29.2	29.2	0.20	1.7	1.7	3.1	3.0	4.3	4.3	2.1
A 20 2_31.3	31.3	0.20	1.7	1.7	3.1	3.0	4.3	4.3	2.1
A 20 2_35.4	35.4	0.20	1.7	1.7	3.1	3.0	4.3	4.3	2.1
A 20 2_39.6	39.6	0.10	1.6	1.6	3.0	2.9	4.2	4.2	2.0
A 20 2_43.2	43.2	0.10	1.6	1.6	3.0	2.9	4.2	4.2	2.0
A 20 2_48.3	48.3	0.10	1.6	1.6	3.0	2.9	4.2	4.2	2.0
A 20 2_53.7	53.7	0.10	1.6	1.6	3.0	2.9	4.2	4.2	2.0
A 20 2_63.1	63.1	0.10	1.6	1.6	3.0	2.9	4.2	4.2	2.0
A 20 2_71.0	71.0	0.05	1.5	1.5	2.9	2.8	4.1	4.1	2.0
A 20 2_79.9	79.9	0.03	1.5	1.5	2.9	2.8	4.1	4.1	2.0
A 20 2_92.3	92.3	0.02	1.5	1.5	—	—	—	—	2.0
A 20 3_109.2	109.2	0.02	1.5	1.5	2.9	2.8	4.1	4.1	0.90
A 20 3_120.5	120.5	0.02	1.5	1.5	2.9	2.8	4.1	4.1	0.90
A 20 3_129.1	129.1	0.02	1.5	1.5	2.9	2.8	4.1	4.1	0.90
A 20 3_146.1	146.1	0.02	1.5	1.5	2.9	2.8	4.1	4.1	0.90
A 20 3_163.4	163.4	0.01	1.5	1.5	2.9	2.8	4.1	4.1	0.90
A 20 3_178.3	178.3	0.01	1.5	1.5	2.9	2.8	4.1	4.1	0.90
A 20 3_199.2	199.2	0.01	1.5	1.5	2.9	2.8	4.1	4.1	0.90
A 20 3_221.3	221.3	0.01	1.5	1.5	2.9	2.8	4.1	4.1	0.90
A 20 3_260.5	260.5	0.01	1.5	1.5	2.9	2.8	4.1	4.1	0.90
A 20 3_292.8	292.8	0.01	1.5	1.5	2.9	2.8	4.1	4.1	0.90
A 20 3_329.4	329.4	0.01	1.5	1.5	2.9	2.8	4.1	4.1	0.90
A 20 3_380.9	380.9	0.01	1.5	1.5	2.9	2.8	4.1	4.1	0.90

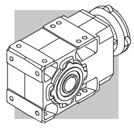

A 20

	i	J $(\cdot 10^{-4})$ [kgm^2]									
		SERVO									
		60A		60B 80A		95A		80C 95B 110A		95C 110B	
		SK	SC	SK	SC	SK	SC	SK	SC	SK	SC
A 20 2_5.4	5.4	—	—	—	—	—	—	5.3	5.8	5.2	6.2
A 20 2_6.5	6.5	—	—	—	—	—	—	4.8	5.3	4.7	5.7
A 20 2_7.3	7.3	1.7	1.9	1.7	2.1	4.2	4.7	4.3	4.8	4.2	5.2
A 20 2_8.4	8.4	1.4	1.6	1.4	1.8	3.9	4.6	4.0	4.5	3.9	4.9
A 20 2_9.4	9.4	1.2	1.4	1.2	1.6	3.7	4.2	3.8	4.3	3.7	4.7
A 20 2_10.3	10.3	—	—	—	—	—	—	4.1	4.6	4.0	5.0
A 20 2_12.0	12.0	0.77	1.0	0.79	1.2	3.3	3.8	3.4	3.9	3.3	4.3
A 20 2_14.1	14.1	0.97	1.2	0.99	1.4	3.5	4.0	3.6	4.1	3.5	4.5
A 20 2_16.2	16.2	0.82	1.1	0.84	1.3	3.4	3.8	3.4	3.9	3.3	4.3
A 20 2_18.1	18.1	0.67	0.93	0.69	1.1	3.2	3.7	3.3	3.8	3.2	4.2
A 20 2_21.2	21.2	0.62	0.88	0.64	1.1	3.2	3.6	3.2	3.7	3.1	4.1
A 20 2_23.1	23.1	0.57	0.83	0.59	1.0	3.1	3.6	3.2	3.7	3.1	4.1
A 20 2_26.5	26.5	0.52	0.78	0.54	0.98	3.1	3.5	3.1	3.6	3.0	4.0
A 20 2_29.2	29.2	0.47	0.73	0.49	0.93	3.0	3.5	3.1	3.6	3.0	4.0
A 20 2_31.3	31.3	0.47	0.73	0.49	0.93	3.0	3.5	3.1	3.6	3.0	4.0
A 20 2_35.4	35.4	0.47	0.73	0.49	0.93	3.0	3.5	3.1	3.6	3.0	4.0
A 20 2_39.6	39.6	0.37	0.63	0.39	0.83	2.9	3.4	3.0	3.5	2.9	3.9
A 20 2_43.2	43.2	0.37	0.63	0.39	0.83	2.9	3.4	3.0	3.5	2.9	3.9
A 20 2_48.3	48.3	0.37	0.63	0.39	0.83	2.9	3.4	3.0	3.5	2.9	3.9
A 20 2_53.7	53.7	0.37	0.63	0.39	0.83	2.9	3.4	3.0	3.5	2.9	3.9
A 20 2_63.1	63.1	0.37	0.63	0.39	0.83	2.9	3.4	3.0	3.5	2.9	3.9
A 20 2_71.0	71.0	0.32	0.58	—	—	—	—	2.9	3.4	2.8	3.8
A 20 2_79.9	79.9	0.30	0.56	—	—	—	—	2.9	3.4	2.8	3.8
A 20 2_92.3	92.3	0.29	0.55	—	—	—	—	—	—	—	—
A 20 3_109.2	109.2	0.29	0.55	0.31	0.75	2.8	3.3	2.9	3.4	2.8	3.8
A 20 3_120.5	120.5	0.29	0.55	0.31	0.75	2.8	3.3	2.9	3.4	2.8	3.8
A 20 3_129.1	129.1	0.29	0.55	0.31	0.75	2.8	3.3	2.9	3.4	2.8	3.8
A 20 3_146.1	146.1	0.29	0.55	0.31	0.75	2.8	3.3	2.9	3.4	2.8	3.8
A 20 3_163.4	163.4	0.28	0.54	0.30	0.74	2.8	3.3	2.9	3.4	2.8	3.8
A 20 3_178.3	178.3	0.28	0.54	0.30	0.74	2.8	3.3	2.9	3.4	2.8	3.8
A 20 3_199.2	199.2	0.28	0.54	0.30	0.74	2.8	3.3	2.9	3.4	2.8	3.8
A 20 3_221.3	221.3	0.28	0.54	0.30	0.74	2.8	3.3	2.9	3.4	2.8	3.8
A 20 3_260.5	260.5	0.28	0.54	0.30	0.74	2.8	3.3	2.9	3.4	2.8	3.8
A 20 3_292.8	292.8	0.28	0.54	0.30	0.74	2.8	3.3	2.9	3.4	2.8	3.8
A 20 3_329.4	329.4	0.28	0.54	0.30	0.74	2.8	3.3	2.9	3.4	2.8	3.8
A 20 3_380.9	380.9	0.28	0.54	0.30	0.74	2.8	3.3	2.9	3.4	2.8	3.8

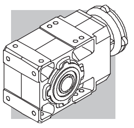

A 30

	i	J (•10^{-4}) [kgm²]							
		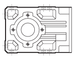	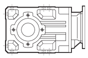 IEC						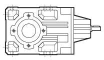
			63	71	80	90	100	112	
A 30 2_5.4	5.4	4.5	—	—	7.4	7.3	8.6	8.6	6.9
A 30 2_6.4	6.4	3.4	—	—	6.6	6.6	7.8	7.8	6.0
A 30 2_7.0	7.0	2.9	—	—	5.8	5.8	7.0	7.0	5.2
A 30 2_8.5	8.5	2.2	—	—	5.1	5.1	6.3	6.3	4.6
A 30 2_9.3	9.3	1.6	3.1	3.1	4.5	4.4	5.7	5.7	4.0
A 30 2_10.5	10.5	2.3	—	—	5.2	5.1	6.4	6.4	4.6
A 30 2_11.8	11.8	1.1	2.6	2.6	4.0	3.9	5.2	5.2	3.4
A 30 2_13.6	13.6	1.5	—	—	4.4	4.3	5.6	5.6	3.9
A 30 2_16.3	16.3	1.2	—	—	4.1	4.0	5.3	5.3	3.5
A 30 2_18.0	18.0	0.90	2.4	2.4	3.8	3.7	5.0	5.0	3.2
A 30 2_20.5	20.5	0.70	2.2	2.2	3.6	3.5	4.8	4.8	3.1
A 30 2_22.8	22.8	0.60	2.1	2.1	3.5	3.4	4.7	4.7	3.0
A 30 2_26.5	26.5	0.50	2.0	2.0	3.4	3.3	4.6	4.6	2.9
A 30 2_29.3	29.3	0.40	1.9	1.9	3.3	3.2	4.5	4.5	2.8
A 30 2_33.4	33.4	0.35	1.8	1.8	3.2	3.1	4.4	4.4	2.7
A 30 2_36.6	36.6	0.30	1.8	1.8	3.2	3.1	4.4	4.4	2.7
A 30 2_39.3	39.3	0.25	1.7	1.7	3.1	3.0	4.3	4.3	2.6
A 30 2_43.4	43.4	0.20	1.7	1.7	3.1	3.0	4.3	4.3	2.6
A 30 2_48.3	48.3	0.20	1.7	1.7	3.1	3.0	4.3	4.3	2.6
A 30 2_52.7	52.7	0.20	1.7	1.7	3.1	3.0	4.3	4.3	2.5
A 30 2_59.4	59.4	0.10	1.6	1.6	3.0	2.9	4.2	4.2	2.5
A 30 2_66.0	66.0	0.10	1.6	1.6	3.0	2.9	4.2	4.2	2.5
A 30 2_76.5	76.5	0.10	1.6	1.6	3.0	2.9	4.2	4.2	2.5
A 30 2_86.7	86.7	0.10	1.6	1.6	3.0	2.9	4.2	4.2	2.5
A 30 2_97.5	97.5	0.10	1.6	1.6	3.0	2.9	4.2	4.2	2.4
A 30 3_109.1	109.1	0.10	1.6	1.6	3.0	2.9	4.2	4.2	0.90
A 30 3_120.5	120.5	0.10	1.6	1.6	3.0	2.9	4.2	4.2	0.90
A 30 3_137.4	137.4	0.10	1.6	1.6	3.0	2.9	4.2	4.2	0.90
A 30 3_150.7	150.7	0.10	1.6	1.6	3.0	2.9	4.2	4.2	0.90
A 30 3_161.4	161.4	0.10	1.6	1.6	3.0	2.9	4.2	4.2	0.90
A 30 3_178.5	178.5	0.10	1.6	1.6	3.0	2.9	4.2	4.2	0.90
A 30 3_198.5	198.5	0.10	1.6	1.6	3.0	2.9	4.2	4.2	0.90
A 30 3_216.6	216.6	0.10	1.6	1.6	3.0	2.9	4.2	4.2	0.90
A 30 3_244.3	244.3	0.10	1.6	1.6	3.0	2.9	4.2	4.2	0.90
A 30 3_271.5	271.5	0.10	1.6	1.6	3.0	2.9	4.2	4.2	0.90
A 30 3_314.5	314.5	0.10	1.6	1.6	3.0	2.9	4.2	4.2	0.90
A 30 3_356.3	356.3	0.06	1.6	1.6	3.0	2.9	4.2	4.2	0.90
A 30 3_400.8	400.8	0.04	1.5	1.6	2.9	2.8	4.1	4.1	0.90

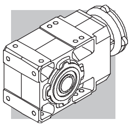

A 30

	i	**J** (•10^{-4}) [kgm^2]											
		SERVO											
		60A		**60B** **80A**		**95A**		**80C** **95B** **110A**		**95C** **110B**		**130A**	
		SK	**SC**	**SK**	**SC**	**SK**	**SC**	**SK**	**SC**	**SK**	**SC**	**SK**	**SC**
A 30 2_5.4	5.4	—	—	—	—	—	—	7.4	7.9	7.3	8.3	7.3	8.3
A 30 2_6.4	6.4	—	—	—	—	—	—	6.6	7.1	6.6	7.6	6.6	7.6
A 30 2_7.0	7.0	—	—	—	—	—	—	5.8	6.3	5.8	6.8	5.8	6.8
A 30 2_8.5	8.5	—	—	—	—	—	—	5.1	5.6	5.1	6.1	5.1	6.1
A 30 2_9.3	9.3	1.9	2.1	1.9	2.3	4.4	4.9	4.5	5.0	4.4	5.4	4.4	5.4
A 30 2_10.5	10.5	—	—	—	—	—	—	5.2	5.7	5.1	6.1	5.1	6.1
A 30 2_11.8	11.8	1.4	1.6	1.4	1.8	3.9	4.4	4.0	4.5	3.9	4.9	3.9	4.9
A 30 2_13.6	13.6	—	—	—	—	—	—	4.4	4.9	4.3	5.3	4.3	5.3
A 30 2_16.3	16.3	—	—	—	—	—	—	4.1	4.6	4.0	5.0	4.0	5.0
A 30 2_18.0	18.0	1.2	1.4	1.2	1.6	3.7	4.2	3.8	4.3	3.7	4.7	3.7	4.7
A 30 2_20.5	20.5	0.97	1.2	0.99	1.4	3.5	4.0	3.6	4.1	3.5	4.5	3.5	4.5
A 30 2_22.8	22.8	0.87	1.1	0.89	1.3	3.4	3.9	3.5	4.0	3.4	4.4	3.4	4.4
A 30 2_26.5	26.5	0.77	1.0	0.79	1.2	3.3	3.8	3.4	3.9	3.3	4.3	3.3	4.3
A 30 2_29.3	29.3	0.67	0.93	0.69	1.1	3.2	3.7	3.3	3.8	3.2	4.2	3.2	4.2
A 30 2_33.4	33.4	0.62	0.88	0.64	1.1	3.2	3.6	3.2	3.7	3.1	4.1	3.1	4.1
A 30 2_36.6	36.6	0.57	0.83	0.59	1.0	3.1	3.6	3.2	3.7	3.1	4.1	3.1	4.1
A 30 2_39.3	39.3	0.52	0.78	0.54	0.98	3.1	3.5	3.1	3.6	3.0	4.0	3.0	4.0
A 30 2_43.4	43.4	0.47	0.73	0.49	0.93	3.0	3.5	3.1	3.6	3.0	4.0	3.0	4.0
A 30 2_48.3	48.3	0.47	0.73	0.49	0.93	3.0	3.5	3.1	3.6	3.0	4.0	3.0	4.0
A 30 2_52.7	52.7	0.47	0.73	0.49	0.93	3.0	3.5	3.1	3.6	3.0	4.0	3.0	4.0
A 30 2_59.4	59.4	0.37	0.63	0.39	0.83	2.9	3.4	3.0	3.5	2.9	3.9	2.9	3.9
A 30 2_66.0	66.0	0.37	0.63	0.39	0.83	2.9	3.4	3.0	3.5	2.9	3.9	2.9	3.9
A 30 2_76.5	76.5	0.37	0.63	0.39	0.83	2.9	3.4	3.0	3.5	2.9	3.9	2.9	3.9
A 30 2_86.7	86.7	0.37	0.63	—	—	—	—	3.0	3.5	2.9	3.9	2.9	3.9
A 30 2_97.5	97.5	0.37	0.63	—	—	—	—	3.0	3.5	2.9	3.9	2.9	3.9
A 30 3_109.1	109.1	0.37	0.63	0.39	0.83	2.9	3.4	3.0	3.5	2.9	3.9	—	—
A 30 3_120.5	120.5	0.37	0.63	0.39	0.83	2.9	3.4	3.0	3.5	2.9	3.9	—	—
A 30 3_137.4	137.4	0.37	0.63	0.39	0.83	2.9	3.4	3.0	3.5	2.9	3.9	—	—
A 30 3_150.7	150.7	0.37	0.63	0.39	0.83	2.9	3.4	3.0	3.5	2.9	3.9	—	—
A 30 3_161.4	161.4	0.37	0.63	0.39	0.83	2.9	3.4	3.0	3.5	2.9	3.9	—	—
A 30 3_178.5	178.5	0.37	0.63	0.39	0.83	2.9	3.4	3.0	3.5	2.9	3.9	—	—
A 30 3_198.5	198.5	0.37	0.63	0.39	0.83	2.9	3.4	3.0	3.5	2.9	3.9	—	—
A 30 3_216.6	216.6	0.37	0.63	0.39	0.83	2.9	3.4	3.0	3.5	2.9	3.9	—	—
A 30 3_244.3	244.3	0.37	0.63	0.39	0.83	2.9	3.4	3.0	3.5	2.9	3.9	—	—
A 30 3_271.5	271.5	0.37	0.63	0.39	0.83	2.9	3.4	3.0	3.5	2.9	3.9	—	—
A 30 3_314.5	314.5	0.37	0.63	0.39	0.83	2.9	3.4	3.0	3.5	2.9	3.9	—	—
A 30 3_356.3	356.3	0.33	0.59	0.35	0.79	2.9	3.3	3.0	3.5	2.9	3.9	—	—
A 30 3_400.8	400.8	0.31	0.57	0.33	0.77	2.9	3.3	2.9	3.4	2.8	3.8	—	—

A 35

	i	J ($\cdot 10^{-4}$) [kgm^2]								
			IEC							
			63	71	80	90	100	112	132	
A 35 2_5.4	5.4	7.3	—	—	10	9.9	11	11	24	9.4
A 35 2_6.4	6.4	5.4	—	—	8.1	8.0	9.2	9.2	22	7.4
A 35 2_7.0	7.0	4.6	—	—	7.3	7.2	8.4	8.4	21	6.6
A 35 2_8.5	8.5	3.3	—	—	6.1	5.9	7.1	7.1	20	5.4
A 35 2_9.3	9.3	2.8	3.5	3.5	5.6	5.4	6.6	6.6	19	4.9
A 35 2_10.6	10.6	2.1	2.9	2.9	4.9	4.8	6.0	6.0	19	4.2
A 35 2_11.8	11.8	1.8	2.5	2.5	4.6	4.4	5.7	5.7	18	3.9
A 35 2_13.1	13.1	3.0	—	—	5.7	5.6	6.8	6.8	—	5.0
A 35 2_15.5	15.5	2.2	—	—	5.0	4.9	6.1	6.1	—	4.3
A 35 2_17.0	17.0	2.0	—	—	4.7	4.6	5.8	5.8	—	4.0
A 35 2_20.4	20.4	1.6	—	—	4.3	4.2	5.4	5.4	—	3.6
A 35 2_22.5	22.5	1.3	2.0	2.0	4.1	3.9	5.1	5.1	—	3.4
A 35 2_25.7	25.7	0.97	1.7	1.7	3.7	3.6	4.8	4.8	—	3.0
A 35 2_28.4	28.4	0.86	1.6	1.6	3.6	3.5	4.7	4.7	—	2.9
A 35 2_33.2	33.2	0.69	1.4	1.4	3.5	3.3	4.5	4.5	—	2.8
A 35 2_36.6	36.6	0.58	1.3	1.3	3.3	3.2	4.4	4.4	—	2.6
A 35 2_41.8	41.8	0.48	1.2	1.2	3.2	3.1	4.3	4.3	—	2.5
A 35 2_45.8	45.8	0.42	1.1	1.1	3.2	3.1	4.3	4.3	—	2.5
A 35 2_49.1	49.1	0.38	1.1	1.1	3.1	3.0	4.2	4.2	—	2.4
A 35 2_54.3	54.3	0.33	1.1	1.0	3.1	3.0	4.2	4.2	—	2.4
A 35 2_60.4	60.4	0.29	1.0	1.0	3.0	2.9	4.1	4.1	—	2.3
A 35 2_65.8	65.8	0.25	1.0	1.0	3.0	2.9	4.1	4.1	—	2.3
A 35 2_74.3	74.3	0.21	0.95	0.93	3.0	2.8	4.1	4.1	—	2.3
A 35 2_82.5	82.5	0.18	0.92	0.90	2.9	2.8	4.0	4.0	—	2.2
A 35 2_95.6	95.6	0.15	0.88	0.87	2.9	2.8	4.0	4.0	—	2.2
A 35 3_105.5	105.5	0.11	0.89	0.87	2.9	2.8	4.0	4.0	—	0.80
A 35 3_116.9	116.9	0.11	0.88	0.87	2.9	2.8	4.0	4.0	—	0.79
A 35 3_136.3	136.3	0.10	0.87	0.86	2.9	2.8	4.0	4.0	—	0.78
A 35 3_150.6	150.6	0.09	0.86	0.85	2.9	2.8	4.0	4.0	—	0.77
A 35 3_171.8	171.8	0.08	0.86	0.84	2.9	2.8	4.0	4.0	—	0.77
A 35 3_188.3	188.3	0.08	0.85	0.84	2.9	2.7	4.0	4.0	—	0.76
A 35 3_201.8	201.8	0.08	0.85	0.84	2.9	2.7	4.0	4.0	—	0.76
A 35 3_223.2	223.2	0.08	0.85	0.84	2.9	2.7	4.0	4.0	—	0.76
A 35 3_248.1	248.1	0.07	0.85	0.83	2.9	2.7	4.0	4.0	—	0.76
A 35 3_270.7	270.7	0.07	0.84	0.83	2.9	2.7	4.0	4.0	—	0.75
A 35 3_305.4	305.4	0.07	0.84	0.83	2.9	2.7	4.0	4.0	—	0.75
A 35 3_339.3	339.3	0.07	0.84	0.83	2.9	2.7	4.0	4.0	—	0.75
A 35 3_393.2	393.2	0.07	0.84	0.83	2.9	2.7	3.9	3.9	—	0.75

A 35

	i	**J** $(\cdot 10^{-4})$ [kgm^2]											
		SERVO											
		60A		**60B 80A**		**95A**		**80C 95B 110A**		**95C 110B**		**130A**	
		SK	**SC**	**SK**	**SC**	**SK**	**SC**	**SK**	**SC**	**SK**	**SC**	**SK**	**SC**
A 35 2_5.4	5.4	—	—	—	—	—	—	10	11	9.9	10.9	9.9	11
A 35 2_6.4	6.4	—	—	—	—	—	—	8.1	8.6	8.0	9.0	8.0	9.0
A 35 2_7.0	7.0	—	—	—	—	—	—	7.3	7.8	7.2	8.2	7.2	8.2
A 35 2_8.5	8.5	—	—	—	—	—	—	6.1	6.6	5.9	6.9	5.9	6.9
A 35 2_9.3	9.3	3.1	3.3	3.1	3.5	5.6	6.1	5.6	6.1	5.4	6.4	5.4	6.4
A 35 2_10.6	10.6	2.4	2.6	2.4	2.8	4.9	5.4	4.9	5.4	4.8	5.8	4.8	5.8
A 35 2_11.8	11.8	2.1	2.3	2.1	2.5	4.6	5.1	4.6	5.1	4.4	5.4	4.4	5.4
A 35 2_13.1	13.1	—	—	—	—	—	—	5.7	6.2	5.6	6.6	5.6	6.6
A 35 2_15.5	15.5	—	—	—	—	—	—	5.0	5.5	4.9	5.9	4.9	5.9
A 35 2_17.0	17.0	—	—	—	—	—	—	4.7	5.2	4.6	5.6	4.6	5.6
A 35 2_20.4	20.4	—	—	—	—	—	—	4.3	4.8	4.2	5.2	4.2	5.2
A 35 2_22.5	22.5	1.6	1.8	1.6	2.0	4.1	4.6	4.1	4.6	3.9	4.9	3.9	4.9
A 35 2_25.7	25.7	1.2	1.5	1.3	1.7	3.8	4.2	3.7	4.2	3.6	4.6	3.6	4.6
A 35 2_28.4	28.4	1.1	1.4	1.2	1.6	3.7	4.1	3.6	4.1	3.5	4.5	3.5	4.5
A 35 2_33.2	33.2	0.96	1.2	0.98	1.4	3.5	3.9	3.5	4.0	3.3	4.3	3.3	4.3
A 35 2_36.6	36.6	0.85	1.1	0.87	1.3	3.4	3.8	3.3	3.8	3.2	4.2	3.2	4.2
A 35 2_41.8	41.8	0.75	1.0	0.77	1.2	3.3	3.7	3.2	3.7	3.1	4.1	3.1	4.1
A 35 2_45.8	45.8	0.69	0.95	0.71	1.1	3.2	3.7	3.2	3.7	3.1	4.1	3.1	4.1
A 35 2_49.1	49.1	0.65	0.91	0.67	1.1	3.2	3.6	3.1	3.6	3.0	4.0	3.0	4.0
A 35 2_54.3	54.3	0.60	0.86	0.62	1.1	3.2	3.6	3.1	3.6	3.0	4.0	3.0	4.0
A 35 2_60.4	60.4	0.56	0.82	0.58	1.0	3.1	3.5	3.0	3.5	2.9	3.9	2.9	3.9
A 35 2_65.8	65.8	0.52	0.78	0.54	0.98	3.1	3.5	3.0	3.5	2.9	3.9	2.9	3.9
A 35 2_74.3	74.3	0.48	0.74	0.50	0.94	3.0	3.5	3.0	3.5	2.8	3.8	2.8	3.8
A 35 2_82.5	82.5	0.45	0.71	0.47	0.91	3.0	3.4	2.9	3.4	2.8	3.8	2.8	3.8
A 35 2_95.6	95.6	0.42	0.68	0.44	0.88	3.0	3.4	2.9	3.4	2.8	3.8	2.8	3.8
A 35 3_105.5	105.5	0.38	0.64	0.40	0.84	2.9	3.4	2.9	3.4	2.8	3.8	—	—
A 35 3_116.9	116.9	0.38	0.64	0.40	0.84	2.9	3.4	2.9	3.4	2.8	3.8	—	—
A 35 3_136.3	136.3	0.37	0.63	0.39	0.83	2.9	3.4	2.9	3.4	2.8	3.8	—	—
A 35 3_150.6	150.6	0.36	0.62	0.38	0.82	2.9	3.3	2.9	3.4	2.8	3.8	—	—
A 35 3_171.8	171.8	0.35	0.61	0.37	0.81	2.9	3.3	2.9	3.4	2.8	3.8	—	—
A 35 3_188.3	188.3	0.35	0.61	0.37	0.81	2.9	3.3	2.9	3.4	2.7	3.7	—	—
A 35 3_201.8	201.8	0.35	0.61	0.37	0.81	2.9	3.3	2.9	3.4	2.7	3.7	—	—
A 35 3_223.2	223.2	0.35	0.61	0.37	0.81	2.9	3.3	2.9	3.4	2.7	3.7	—	—
A 35 3_248.1	248.1	0.34	0.60	0.36	0.80	2.9	3.3	2.9	3.4	2.7	3.7	—	—
A 35 3_270.7	270.7	0.34	0.60	0.36	0.80	2.9	3.3	2.9	3.4	2.7	3.7	—	—
A 35 3_305.4	305.4	0.34	0.60	0.36	0.80	2.9	3.3	2.9	3.4	2.7	3.7	—	—
A 35 3_339.3	339.3	0.34	0.60	0.36	0.80	2.9	3.3	2.9	3.4	2.7	3.7	—	—
A 35 3_393.2	393.2	0.34	0.60	0.36	0.80	2.9	3.3	2.9	3.4	2.7	3.7	—	—

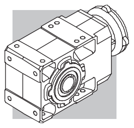

A 41

	i	J ($\cdot 10^{-4}$) [kgm^2]								
		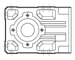	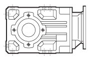 IEC							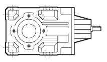
			63	71	80	90	100	112	132	
A 41 2_5.2	5.2	13	—	—	16	16	17	17	32	23
A 41 2_7.1	7.1	7.3	—	—	10	10	11	11	26	18
A 41 2_8.3	8.3	5.9	—	—	8.8	8.7	10	10	25	16
A 41 2_9.2	9.2	4.5	—	—	7.4	7.3	8.6	8.6	23	15
A 41 2_10.1	10.1	5.9	—	—	8.8	8.7	10	10	25	16
A 41 2_11.7	11.7	2.9	4.4	4.4	5.8	5.7	7.0	7.0	22	13
A 41 2_13.8	13.8	3.6	—	—	6.5	6.4	7.7	7.7	23	14
A 41 2_16.1	16.1	2.9	—	—	5.8	5.7	7.0	7.0	22	13
A 41 2_17.8	17.8	2.2	—	—	5.1	5.0	6.3	6.3	21	11
A 41 2_22.7	22.7	1.5	3.0	3.0	4.4	4.3	5.6	5.6	20	11
A 41 2_28.3	28.3	1.1	2.6	2.6	4.0	3.9	5.2	5.2	20	10
A 41 2_35.9	35.9	1.7	3.2	3.2	4.6	4.5	5.8	5.8	20	9.8
A 41 2_45.1	45.1	1.5	3.0	3.0	4.4	4.3	5.6	5.6	20	9.6
A 41 2_48.3	48.3	1.4	2.9	2.9	4.3	4.2	5.5	5.5	—	9.5
A 41 2_53.1	53.1	1.4	2.9	2.9	4.3	4.2	5.5	5.5	—	9.5
A 41 2_58.8	58.8	1.3	2.8	2.8	4.2	4.1	5.4	5.4	—	9.4
A 41 2_64.2	64.2	1.3	2.8	2.8	4.2	4.1	5.4	5.4	—	9.4
A 41 2_71.3	71.3	1.2	2.7	2.7	4.1	4.0	5.3	5.3	—	9.3
A 41 2_79.2	79.2	1.2	2.7	2.7	4.1	4.0	5.3	5.3	—	9.3
A 41 3_92.8	92.8	1.1	2.6	2.6	4.0	3.9	5.2	5.2	—	9.2
A 41 3_115.9	115.9	0.20	1.7	1.7	2.9	3.0	4.3	4.3	—	2.1
A 41 3_146.9	146.9	0.10	1.6	1.6	2.8	2.9	4.2	4.2	—	2.1
A 41 3_184.4	184.4	0.10	1.6	1.6	2.8	2.9	4.2	4.2	—	2.1
A 41 3_197.5	197.5	0.10	1.6	1.6	2.8	2.9	4.2	4.2	—	2.0
A 41 3_217.4	217.4	0.10	1.6	1.6	2.8	2.9	4.2	4.2	—	2.0
A 41 3_240.6	240.6	0.10	1.6	1.6	2.8	2.9	4.2	4.2	—	2.0
A 41 3_262.5	262.5	0.10	1.6	1.6	2.8	2.9	4.2	4.2	—	2.0
A 41 3_291.7	291.7	0.10	1.6	1.6	2.8	2.9	4.2	4.2	—	2.0
A 41 3_324.2	324.2	0.10	1.6	1.6	2.8	2.9	4.2	4.2	—	2.0
A 41 3_376.8	376.8	0.10	1.6	1.6	2.8	2.9	4.2	4.2	—	2.0

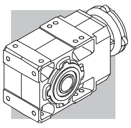

A 41

		J (•10^{-4}) [kgm^2] SERVO																			
	i	60A		60B 80A		80B		95A		80C 95B 110A		95C 110B		130A		130B 180A		180B	
		SK	SC	SK	SC	SK	SC	SK	SC	SK	SC	SK	SC	SK	SC	SK	SC	SK	SC
A 41 2_5.2	5.2	—	—	—	—	—	—	—	—	16	16.5	16	17	16	17	30	32	32	37
A 41 2_7.1	7.1	—	—	—	—	—	—	—	—	10	10.5	10	11	10	11	24	27	26	31
A 41 2_8.3	8.3	—	—	—	—	—	—	—	—	8.8	9.3	8.7	9.7	8.7	9.7	23	25	25	30
A 41 2_9.2	9.2	—	—	—	—	—	—	—	—	7.4	7.9	7.3	8.3	7.3	8.3	21	24	23	28
A 41 2_10.1	10.1	—	—	—	—	—	—	—	—	8.8	9.3	8.7	9.7	8.7	9.7	23	25	25	30
A 41 2_11.7	11.7	—	—	—	—	5.7	6.2	5.7	6.2	5.8	6.3	5.7	6.7	5.7	6.7	20	22	22	27
A 41 2_13.8	13.8	—	—	—	—	—	—	—	—	6.5	7.0	6.4	7.4	6.4	7.4	21	23	23	28
A 41 2_16.1	16.1	—	—	—	—	—	—	—	—	5.8	6.3	5.7	6.7	5.7	6.7	20	22	22	27
A 41 2_17.8	17.8	—	—	—	—	—	—	—	—	5.1	5.6	5.0	6.0	5.0	6.0	19	22	21	26
A 41 2_22.7	22.7	—	—	—	—	4.3	4.8	4.3	4.8	4.4	4.9	4.3	5.3	4.3	5.3	18	21	20	25
A 41 2_28.3	28.3	—	—	—	—	3.9	4.4	3.9	4.4	4.0	4.5	3.9	4.9	3.9	4.9	18	21	20	25
A 41 2_35.9	35.9	—	—	—	—	4.5	5.0	4.5	5.0	4.6	5.1	4.5	5.5	4.5	5.5	19	21	20	25
A 41 2_45.1	45.1	—	—	—	—	4.3	4.8	4.3	4.8	4.4	4.9	4.3	5.3	4.3	5.3	18	21	20	25
A 41 2_48.3	48.3	—	—	—	—	4.2	4.7	4.2	4.7	4.3	4.8	4.2	5.2	4.2	5.2	—	—	—	—
A 41 2_53.1	53.1	—	—	—	—	4.2	4.7	4.2	4.7	4.3	4.8	4.2	5.2	4.2	5.2	—	—	—	—
A 41 2_58.8	58.8	—	—	—	—	4.1	4.6	4.1	4.6	4.2	4.7	4.1	5.1	4.1	5.1	—	—	—	—
A 41 2_64.2	64.2	—	—	—	—	4.1	4.6	4.1	4.6	4.2	4.7	4.1	5.1	4.1	5.1	—	—	—	—
A 41 2_71.3	71.3	—	—	—	—	4.0	4.5	4.0	4.5	4.1	4.6	4.0	5.0	4.0	5.0	—	—	—	—
A 41 2_79.2	79.2	—	—	—	—	4.0	4.5	4.0	4.5	4.1	4.6	4.0	5.0	4.0	5.0	—	—	—	—
A 41 3_92.8	92.8	1.4	1.6	1.4	1.8	—	—	3.9	4.4	4.0	4.5	3.9	4.9	—	—	—	—	—	—
A 41 3_115.9	115.9	0.47	0.73	0.49	0.93	—	—	3.0	3.5	2.9	3.4	3.0	4.0	—	—	—	—	—	—
A 41 3_146.9	146.9	0.37	0.63	0.39	0.83	—	—	2.9	3.4	2.8	3.3	2.9	3.9	—	—	—	—	—	—
A 41 3_184.4	184.4	0.37	0.63	0.39	0.83	—	—	2.9	3.4	2.8	3.3	2.9	3.9	—	—	—	—	—	—
A 41 3_197.5	197.5	0.37	0.63	0.39	0.83	—	—	2.9	3.4	2.8	3.3	2.9	3.9	—	—	—	—	—	—
A 41 3_217.4	217.4	0.37	0.63	0.39	0.83	—	—	2.9	3.4	2.8	3.3	2.9	3.9	—	—	—	—	—	—
A 41 3_240.6	240.6	0.37	0.63	0.39	0.83	—	—	2.9	3.4	2.8	3.3	2.9	3.9	—	—	—	—	—	—
A 41 3_262.5	262.5	0.37	0.63	0.39	0.83	—	—	2.9	3.4	2.8	3.3	2.9	3.9	—	—	—	—	—	—
A 41 3_291.7	291.7	0.37	0.63	0.39	0.83	—	—	2.9	3.4	2.8	3.3	2.9	3.9	—	—	—	—	—	—
A 41 3_324.2	324.2	0.37	0.63	0.39	0.83	—	—	2.9	3.4	2.8	3.3	2.9	3.9	—	—	—	—	—	—
A 41 3_376.8	376.8	0.37	0.63	0.39	0.83	—	—	2.9	3.4	2.8	3.3	2.9	3.9	—	—	—	—	—	—

A 50

		J (•10^{-4}) [kgm^2]										
	i	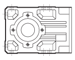	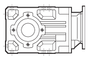 **IEC**									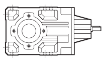
			63	**71**	**80**	**90**	**100**	**112**	**132**	**160**	**180**	
A 50 2_7.7	7.7	15	—	—	18	18	19	19	34	93	91	24
A 50 2_9.7	9.7	10	—	—	13	13	14	14	29	89	86	19
A 50 2_13.1	13.1	6.3	—	—	9.2	9.1	10	10	25	85	82	15
A 50 2_16.6	16.6	4.2	—	—	7.0	7.0	8.2	8.2	23	82	80	13
A 50 2_20.9	20.9	2.8	4.2	4.2	5.7	5.6	6.9	6.9	22	81	79	12
A 50 3_24.0	24.0	6.0	—	—	8.9	8.8	10	10	25	84	82	15
A 50 3_26.4	26.4	5.8	—	—	8.7	8.6	9.9	9.9	25	84	82	15
A 50 3_32.4	32.4	4.0	—	—	6.8	6.8	8.1	8.1	23	82	80	13
A 50 3_35.6	35.6	3.9	—	—	6.7	6.7	8.0	8.0	23	82	80	13
A 50 3_40.9	40.9	2.7	—	—	5.6	5.5	6.8	6.8	22	81	79	12
A 50 3_45.0	45.0	2.6	—	—	5.5	5.4	6.7	6.7	22	81	79	12
A 50 3_51.7	51.7	1.9	3.4	3.4	4.7	4.7	6.0	6.0	21	80	78	11
A 50 3_56.8	56.8	1.9	3.3	3.3	4.7	4.6	5.9	5.9	21	80	78	11
A 50 3_63.9	63.9	1.4	2.9	2.8	4.2	4.2	5.5	5.5	20	80	77	11
A 50 3_70.2	70.2	1.4	2.8	2.8	4.2	4.1	5.4	5.4	20	80	77	10
A 50 3_81.5	81.5	0.90	2.4	2.4	3.8	3.7	5.0	5.0	20	79	77	10
A 50 3_89.5	89.5	0.90	2.4	2.4	3.7	3.7	5.0	5.0	20	79	77	10
A 50 3_99.5	99.5	0.60	2.1	2.1	3.5	3.4	4.7	4.7	20	79	77	9.7
A 50 3_109.4	109.4	0.60	2.1	2.1	3.5	3.4	4.7	4.7	20	79	77	9.7
A 50 3_118.0	118.0	0.50	2.0	2.0	3.4	3.3	4.6	4.6	—	—	—	9.6
A 50 3_129.7	129.7	0.50	2.0	2.0	3.4	3.3	4.6	4.6	—	—	—	9.6
A 50 3_140.6	140.6	0.40	1.8	1.8	3.2	3.2	4.4	4.4	—	—	—	9.4
A 50 3_154.6	154.6	0.40	1.8	1.8	3.2	3.2	4.4	4.4	—	—	—	9.4
A 50 3_173.4	173.4	0.30	1.7	1.7	3.1	3.0	4.3	4.3	—	—	—	9.3
A 50 3_190.6	190.6	0.20	1.7	1.7	3.1	3.0	4.3	4.3	—	—	—	9.3

Im Hinblick auf die Trägheitsmomente der 4-stufigen Getriebe verweisen wir auf unseren Technischen Dienst.

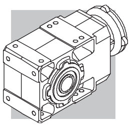

A 50

		J (•10⁻⁴) [kgm²]									
		SERVO									
	i	80B 95A		80C 95B 110A		95C 110B 130A		130B 180A		180B	
		SK	SC	SK	SC	SK	SC	SK	SC	SK	SC
A 50 2_7.7	7.7	—	—	18	19	18	19	32	34	34	39
A 50 2_9.7	9.7	—	—	13	14	13	14	27	29	29	34
A 50 2_13.1	13.1	—	—	9.2	9.7	9.1	10	23	26	25	30
A 50 2_16.6	16.6	—	—	7.0	7.5	7.0	8.0	21	24	23	28
A 50 2_20.9	20.9	5.6	6.1	5.7	6.2	5.6	6.6	20	22	22	27
A 50 3_24.0	24.0	—	—	8.9	9.4	8.8	9.8	23	25	25	30
A 50 3_26.4	26.4	—	—	8.7	9.2	8.6	9.6	23	25	25	30
A 50 3_32.4	32.4	—	—	6.8	7.3	6.8	7.8	21	23	23	28
A 50 3_35.6	35.6	—	—	6.7	7.2	6.7	7.7	21	23	23	28
A 50 3_40.9	40.9	—	—	5.6	6.1	5.5	6.5	20	22	22	27
A 50 3_45.0	45.0	—	—	5.5	6.0	5.4	6.4	20	22	22	27
A 50 3_51.7	51.7	4.7	5.1	4.7	5.2	4.7	5.7	19	21	21	26
A 50 3_56.8	56.8	4.7	5.1	4.7	5.2	4.6	5.6	19	21	21	26
A 50 3_63.9	63.9	4.2	4.7	4.2	5.2	4.2	5.2	18	21	20	25
A 50 3_70.2	70.2	4.2	4.7	4.2	5.2	4.1	5.1	18	21	20	25
A 50 3_81.5	81.5	3.7	4.1	3.8	4.3	3.7	4.7	18	20	20	25
A 50 3_89.5	89.5	3.7	4.1	3.7	4.2	3.7	4.7	18	20	20	25
A 50 3_99.5	99.5	3.4	3.9	3.5	4.0	3.4	4.4	18	20	20	25
A 50 3_109.4	109.4	3.4	3.9	3.5	4.0	3.4	4.4	18	20	20	25
A 50 3_118.0	118.0	3.3	3.8	3.4	4.0	3.3	4.3	—	—	—	—
A 50 3_129.7	129.7	3.3	3.8	3.4	4.0	3.3	4.3	—	—	—	—
A 50 3_140.6	140.6	3.2	3.7	3.2	3.7	3.2	4.2	—	—	—	—
A 50 3_154.6	154.6	3.2	3.7	3.2	3.7	3.2	4.2	—	—	—	—
A 50 3_173.4	173.4	3.1	3.6	3.1	3.6	3.0	4.0	—	—	—	—
A 50 3_190.6	190.6	3.0	3.5	3.1	3.6	3.0	4.0	—	—	—	—

Im Hinblick auf die Trägheitsmomente der 4-stufigen Getriebe verweisen wir auf unseren Technischen Dienst.

A 55

	i	J ($\cdot 10^{-4}$) [kgm^2]										
			IEC									
			63	71	80	90	100	112	132	160	180	
A 55 2_4.9	4.9	61	—	—	—	—	—	—	77	123	120	70
A 55 2_6.4	6.4	41	—	—	—	—	—	—	57	103	100	50
A 55 2_8.5	8.5	26	—	—	—	—	—	—	42	88	85	35
A 55 2_10.4	10.4	19	—	—	—	—	—	—	35	81	78	28
A 55 2_13.1	13.1	12	—	—	14	14	17	17	28	74	72	21
A 55 2_15.7	15.7	8.9	—	—	11	11	14	14	25	71	68	18
A 55 2_19.2	19.2	6.2	—	—	8.6	8.5	11	11	23	68	66	15
A 55 3_23.8	23.8	11	—	—	13	13	16	16	27	73	70	20
A 55 3_29.9	29.9	7.9	—	—	10	10	13	13	24	70	67	17
A 55 3_40.3	40.3	5.3	—	—	7.8	7.6	10	10	22	68	65	14
A 55 3_51.0	51.0	3.6	—	—	6.0	5.9	8.6	8.6	20	66	63	13
A 55 3_64.3	64.3	2.6	3.1	3.0	5.1	5.0	7.7	7.7	19	65	62	12
A 55 3_79.5	79.5	2.0	2.4	2.4	4.5	4.4	7.1	7.1	18	64	62	11
A 55 3_101.4	101.4	1.3	1.8	1.8	3.8	3.7	6.5	6.5	18	64	61	10
A 55 3_123.9	123.9	1.0	1.5	1.5	3.6	3.4	6.2	6.2	17	63	61	10
A 55 3_132.7	132.7	0.71	1.4	1.4	3.5	3.3	6.1	6.1	—	—	—	9.5
A 55 3_146.8	146.8	0.66	1.4	1.4	3.4	3.3	6.0	6.0	—	—	—	9.4
A 55 3_160.4	160.4	0.58	1.3	1.3	3.3	3.2	6.0	6.0	—	—	—	9.4
A 55 3_175.0	175.0	0.50	1.2	1.2	3.3	3.1	5.9	5.9	—	—	—	9.3
A 55 3_194.2	194.2	0.43	1.2	1.2	3.2	3.1	5.8	5.8	—	—	—	9.2

Im Hinblick auf die Trägheitsmomente der 4-stufigen Getriebe verweisen wir auf unseren Technischen Dienst.

A 55

	i	J (•10-4) [kgm2]									
		SERVO									
		80B 95A		80C 95B 110A		95C 110B 130A		130B 180A		180B	
		SK	SC	SK	SC	SK	SC	SK	SC	SK	SC
A 55 2_4.9	4.9	—	—	—	—	—	—	78	80	77	82
A 55 2_6.4	6.4	—	—	—	—	—	—	58	60	57	62
A 55 2_8.5	8.5	—	—	—	—	—	—	43	45	42	47
A 55 2_10.4	10.4	—	—	—	—	—	—	36	38	35	40
A 55 2_13.1	13.1	—	—	14	15	14	15	29	31	28	33
A 55 2_15.7	15.7	—	—	11	12	11	12	26	28	25	30
A 55 2_19.2	19.2	—	—	8.6	9.1	8.5	9.5	23	26	23	28
A 55 3_23.8	23.8	—	—	13	14	13	14	28	30	27	32
A 55 3_29.9	29.9	—	—	10	11	10	11	25	27	24	29
A 55 3_40.3	40.3	—	—	7.8	8.3	7.6	8.6	22	25	22	27
A 55 3_51.0	51.0	—	—	6.0	6.5	5.9	6.9	21	23	20	25
A 55 3_64.3	64.3	5.4	5.9	5.1	5.6	5.0	6.0	20	22	19	24
A 55 3_79.5	79.5	4.8	5.3	4.5	5.0	4.4	5.4	19	21	18	23
A 55 3_101.4	101.4	4.1	4.6	3.8	4.3	3.7	4.7	18	21	18	23
A 55 3_123.9	123.9	3.8	4.3	3.6	4.1	3.4	4.4	18	20	17	22
A 55 3_132.7	132.7	3.5	4.0	3.5	4.0	3.3	4.3	—	—	—	—
A 55 3_146.8	146.8	3.5	3.9	3.4	3.9	3.3	4.3	—	—	—	—
A 55 3_160.4	160.4	3.4	3.8	3.3	3.8	3.2	4.2	—	—	—	—
A 55 3_175.0	175.0	3.3	3.8	3.3	3.8	3.1	4.1	—	—	—	—
A 55 3_194.2	194.2	3.3	3.7	3.2	3.7	3.1	4.1	—	—	—	—

Im Hinblick auf die Trägheitsmomente der 4-stufigen Getriebe verweisen wir auf unseren Technischen Dienst.

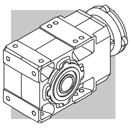

A 60

		J ($\bullet 10^{-4}$) [kgm^2]										
	i	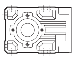	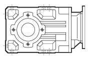 IEC									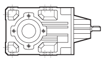
			63	**71**	**80**	**90**	**100**	**112**	**132**	**160**	**180**	
A 60 2_7.9	7.9	36	—	—	—	—	—	—	54	114	112	57
A 60 2_10.3	10.3	23	—	—	25	25	27	27	41	101	99	44
A 60 2_12.7	12.7	16	—	—	19	19	20	20	35	94	92	37
A 60 2_16.7	16.7	9.4	—	—	12	12	14	14	28	88	85	30
A 60 2_20.6	20.6	6.7	—	—	9.6	9.5	11	11	26	85	83	28
A 60 3_25.7	25.7	14	—	—	17	17	18	18	33	92	90	35
A 60 3_27.9	27.9	14	—	—	17	17	18	18	33	92	90	35
A 60 3_31.7	31.7	10	—	—	13	13	15	15	29	89	86	31
A 60 3_34.3	34.3	10	—	—	13	13	14	14	29	89	86	31
A 60 3_41.7	41.7	6.1	—	—	9.0	8.9	10	10	25	84	82	27
A 60 3_45.2	45.2	6.1	—	—	8.9	8.9	10	10	25	84	82	27
A 60 3_51.3	51.3	5.0	—	—	7.4	7.4	8.7	8.7	24	83	81	26
A 60 3_55.6	55.6	4.5	—	—	7.4	7.3	8.6	8.6	23	83	81	26
A 60 3_65.0	65.0	3.2	4.7	4.6	6.1	6.0	7.3	7.3	22	82	79	24
A 60 3_70.4	70.4	3.2	4.7	4.6	6.1	6.0	7.3	7.3	22	81	79	24
A 60 3_79.7	79.7	2.1	3.6	3.5	5.0	4.9	6.2	6.2	21	80	78	23
A 60 3_86.4	86.4	2.1	3.6	3.5	5.0	4.9	6.2	6.2	21	80	78	23
A 60 3_99.5	99.5	2.0	3.5	3.4	4.3	4.3	5.6	5.6	20	80	78	23
A 60 3_107.8	107.8	1.5	3.0	2.9	4.3	4.3	5.6	5.6	20	80	78	22
A 60 3_123.0	123.0	1.1	2.6	2.5	4.0	3.9	5.2	5.2	20	79	77	22
A 60 3_133.3	133.3	1.1	2.6	2.5	3.9	3.9	5.2	5.2	20	79	77	22
A 60 3_144.0	144.0	0.80	2.3	2.2	3.7	3.6	5.0	5.0	—	—	—	22
A 60 3_156.0	156.0	0.80	2.3	2.2	3.7	3.6	5.0	5.0	—	—	—	22
A 60 3_171.5	171.5	0.60	2.1	2.0	3.5	3.4	4.7	4.7	—	—	—	22
A 60 3_185.8	185.8	0.60	2.1	2.0	3.5	3.4	4.7	4.7	—	—	—	22

Im Hinblick auf die Trägheitsmomente der 4-stufigen Getriebe verweisen wir auf unseren Technischen Dienst.

A 60

	i	**J** (•10^{-4}) [kgm^2]									
		SERVO									
		95A		80C 95B 110A		95C 110B 130A		130B 180A		180B	
		SK	SC	SK	SC	SK	SC	SK	SC	SK	SC
A 60 2_7.9	7.9	—	—	—	—	—	—	53	55	54	59
A 60 2_10.3	10.3	—	—	25	26	25	26	40	42	41	46
A 60 2_12.7	12.7	—	—	19	20	19	20	33	35	35	40
A 60 2_16.7	16.7	—	—	12	13	12	13	26	29	28	33
A 60 2_20.6	20.6	—	—	9.6	10	9.5	10	24	26	26	31
A 60 3_25.7	25.7	—	—	17	18	17	18	31	33	33	38
A 60 3_27.9	27.9	—	—	17	18	17	18	31	33	33	38
A 60 3_31.7	31.7	—	—	13	14	13	14	27	29	29	34
A 60 3_34.3	34.3	—	—	13	14	13	14	27	29	29	34
A 60 3_41.7	41.7	—	—	9.0	9.5	8.9	9.9	23	26	25	30
A 60 3_45.2	45.2	—	—	8.9	9.4	8.9	9.9	23	26	25	30
A 60 3_51.3	51.3	—	—	7.4	7.9	7.4	8.4	22	24	24	29
A 60 3_55.6	55.6	—	—	7.4	7.9	7.3	8.3	21	24	23	28
A 60 3_65.0	65.0	6.0	6.5	6.1	6.6	6.0	7.0	20	23	22	27
A 60 3_70.4	70.4	6.0	6.5	6.1	6.6	6.0	7.0	20	23	22	27
A 60 3_79.7	79.7	4.9	5.4	5.0	5.5	4.9	5.9	19	22	21	26
A 60 3_86.4	86.4	4.9	5.4	5.0	5.5	4.9	5.9	19	22	21	26
A 60 3_99.5	99.5	4.8	5.3	4.3	4.8	4.3	5.3	19	21	20	25
A 60 3_107.8	107.8	4.3	4.8	4.3	4.8	4.3	5.3	18	21	20	25
A 60 3_123.0	123.0	3.9	4.4	4.0	4.5	3.9	4.9	18	21	20	25
A 60 3_133.3	133.3	3.9	4.4	3.9	4.4	3.9	4.9	18	21	20	25
A 60 3_144.0	144.0	3.6	4.1	3.7	4.2	3.6	4.6	—	—	—	—
A 60 3_156.0	156.0	3.6	4.1	3.7	4.2	3.6	4.6	—	—	—	—
A 60 3_171.5	171.5	3.4	3.9	3.5	4.0	3.4	4.4	—	—	—	—
A 60 3_185.8	185.8	3.4	3.9	3.5	4.0	3.4	4.4	—	—	—	—

Im Hinblick auf die Trägheitsmomente der 4-stufigen Getriebe verweisen wir auf unseren Technischen Dienst.

A 70

	i	J ($\bullet 10^{-4}$) [kgm^2]											
		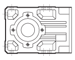	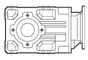 IEC										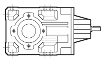
			80	90	100	112	132	160	180	200	225	250	
A 70 3_9.4	9.4	—	—	—	—	—	—	187	185	194	—	—	150
A 70 3_10.2	10.2	—	—	—	—	—	—	183	180	190	—	—	146
A 70 3_12.1	12.1	—	—	—	—	—	—	150	148	157	—	—	113
A 70 3_13.1	13.1	—	—	—	—	—	—	147	145	154	—	—	111
A 70 3_15.4	15.4	45	—	—	—	—	64	124	121	161	—	—	87
A 70 3_16.7	16.7	44	—	—	—	—	63	122	120	129	—	—	85
A 70 3_19.7	19.7	30	—	—	—	—	49	109	107	—	—	—	72
A 70 3_21.3	21.3	29	—	—	—	—	48	108	106	—	—	—	71
A 70 3_23.5	23.5	—	—	—	—	—	—	116	114	123	—	—	79
A 70 3_27.8	27.8	—	—	—	—	—	—	118	116	125	—	—	81
A 70 3_30.1	30.1	—	—	—	—	—	—	117	115	124	—	—	81
A 70 3_35.4	35.4	26	—	—	—	—	45	104	102	111	—	—	67
A 70 3_38.4	38.4	25	—	—	—	—	44	104	101	111	—	—	67
A 70 3_45.2	45.2	18	—	—	—	—	37	97	94	—	—	—	59
A 70 3_49.0	49.0	18	—	—	—	—	37	96	94	—	—	—	59
A 70 3_53.2	53.2	15	—	—	—	—	34	93	91	—	—	—	56
A 70 3_57.7	57.7	15	—	—	—	—	34	93	91	—	—	—	56
A 70 3_66.9	66.9	9.7	12	12	13	13	29	88	86	—	—	—	51
A 70 3_72.5	72.5	9.6	12	12	13	13	28	88	86	—	—	—	51
A 70 3_79.3	79.3	6.8	9.4	9.3	11	11	26	85	83	—	—	—	48
A 70 3_85.9	85.9	6.7	9.3	9.3	11	11	26	85	83	—	—	—	48
A 70 3_96.2	96.2	5.4	8.2	8.2	9.4	9.4	24	84	82	—	—	—	47
A 70 3_104.2	104.2	5.4	8.2	8.1	9.4	9.4	24	84	81	—	—	—	47
A 70 3_120.6	120.6	3.4	6.2	6.2	7.5	7.5	22	82	79	—	—	—	45
A 70 3_130.7	130.7	3.4	6.2	6.2	7.4	7.4	22	82	79	—	—	—	45
A 70 3_141.9	141.9	2.4	5.3	5.2	6.5	6.5	21	81	78	—	—	—	44
A 70 3_153.7	153.7	2.4	5.2	5.2	6.5	6.5	21	81	78	—	—	—	44

Im Hinblick auf die Trägheitsmomente der 4-stufigen Getriebe verweisen wir auf unseren Technischen Dienst.

A 80

	i	J ($\cdot 10^{-4}$) [kgm^2]											
		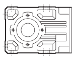	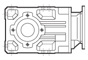 IEC										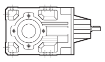
			80	90	100	112	132	160	180	200	225	250	
A 80 3_9.8	9.8	—	—	—	—	—	—	—	320	333	611	—	286
A 80 3_10.7	10.7	—	—	—	—	—	—	—	309	323	601	—	276
A 80 3_12.3	12.3	—	—	—	—	—	—	239	239	253	531	—	205
A 80 3_13.3	13.3	—	—	—	—	—	—	232	233	246	524	—	199
A 80 3_15.5	15.5	—	—	—	—	—	—	187	185	194	478	—	150
A 80 3_16.7	16.7	—	—	—	—	—	—	183	180	190	474	—	150
A 80 3_19.3	19.3	69	—	—	—	—	88	147	145	154	440	—	111
A 80 3_20.9	20.9	66	—	—	—	—	85	145	142	152	437	—	108
A 80 3_22.6	22.6	—	—	—	—	—	—	—	205	219	496	—	171
A 80 3_24.5	24.5	—	—	—	—	—	—	—	203	217	494	—	169
A 80 3_28.2	28.2	—	—	—	—	—	—	165	166	179	457	—	132
A 80 3_30.6	30.6	—	—	—	—	—	—	164	164	178	456	—	130
A 80 3_35.5	35.5	—	—	—	—	—	—	140	138	147	432	—	104
A 80 3_38.5	38.5	—	—	—	—	—	—	140	137	147	431	—	103
A 80 3_44.5	44.5	39	—	—	—	—	58	118	115	125	410	—	81
A 80 3_48.2	48.2	39	—	—	—	—	58	117	115	124	410	—	90
A 80 3_55.2	55.2	29	—	—	—	—	48	108	105	136	399	—	70
A 80 3_59.8	59.8	29	—	—	—	—	48	107	105	136	399	—	70
A 80 3_66.8	66.8	22	—	—	—	—	41	101	98	128	391	—	63
A 80 3_72.4	72.4	22	—	—	—	—	41	100	98	128	391	—	63
A 80 3_82.3	82.3	15	17	17	18	18	34	94	91	120	384	—	56
A 80 3_89.2	89.2	15	17	17	18	18	34	93	91	120	386	—	56
A 80 3_96.0	96.0	14	16	16	17	17	32	92	90	119	382	—	55
A 80 3_104.0	104.0	13	16	16	17	17	32	92	89	119	382	—	55
A 80 3_116.0	116.0	9.1	12	12	13	13	28	87	85	—	—	—	50
A 80 3_125.6	125.6	9.1	12	12	13	13	28	87	85	—	—	—	50
A 80 3_144.7	144.7	5.4	8.3	8.2	10	10	24	84	82	—	—	—	47
A 80 3_156.8	156.8	5.4	3.0	2.9	4.2	4.2	19	78	76	—	—	—	41

Im Hinblick auf die Trägheitsmomente der 4-stufigen Getriebe verweisen wir auf unseren Technischen Dienst.

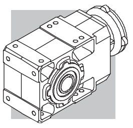

A 90

	i	**J** (•10^{-4}) [kgm^2]											
		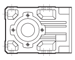	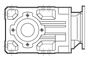 IEC										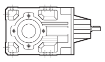
			80	**90**	**100**	**112**	**132**	**160**	**180**	**200**	**225**	**250**	
A 90 3_9.7	9.7	—	—	—	—	—	—	—	597	611	889	918	898
A 90 3_10.5	10.5	—	—	—	—	—	—	—	575	589	867	896	876
A 90 3_12.6	12.6	—	—	—	—	—	—	—	402	416	693	723	703
A 90 3_13.7	13.7	—	—	—	—	—	—	—	389	403	681	710	690
A 90 3_15.6	15.6	—	—	—	—	—	—	—	306	319	597	627	607
A 90 3_16.9	16.9	—	—	—	—	—	—	—	297	311	589	618	598
A 90 3_19.4	19.4	—	—	—	—	—	—	236	234	243	527	559	530
A 90 3_21.0	21.0	—	—	—	—	—	—	231	228	238	522	553	524
A 90 3_22.3	22.3	—	—	—	—	—	—	—	326	340	618	647	627
A 90 3_24.1	24.1	—	—	—	—	—	—	—	322	336	614	643	623
A 90 3_29.1	29.1	—	—	—	—	—	—	—	243	257	535	564	544
A 90 3_31.5	31.5	—	—	—	—	—	—	—	241	254	532	562	542
A 90 3_35.8	35.8	—	—	—	—	—	—	—	201	215	493	522	502
A 90 3_38.8	38.8	—	—	—	—	—	—	—	200	213	491	521	500
A 90 3_44.6	44.6	—	—	—	—	—	—	169	166	176	460	491	462
A 90 3_48.3	48.3	—	—	—	—	—	—	168	165	175	459	490	461
A 90 3_55.0	55.0	66	—	—	—	—	85	144	142	151	437	468	438
A 90 3_59.6	59.6	66	—	—	—	—	84	144	141	151	436	468	437
A 90 3_68.8	68.8	48	—	—	—	—	67	126	124	154	418	449	416
A 90 3_74.5	74.5	47	—	—	—	—	66	126	123	154	417	449	416
A 90 3_80.4	80.4	43	—	—	—	—	62	121	119	149	412	443	412
A 90 3_87.1	87.1	43	—	—	—	—	62	121	119	148	412	443	412
A 90 3_98.6	98.6	28	30	30	32	32	47	106	104	134	397	428	399
A 90 3_106.8	106.8	28	30	30	31	31	47	106	104	133	397	428	399
A 90 3_116.9	116.9	23	25	25	26	26	41	101	99	128	391	423	394
A 90 3_126.6	126.6	22	25	25	26	26	41	101	98	128	391	422	394
A 90 3_139.4	139.4	15	17	17	19	19	33	93	91	—	—	—	386
A 90 3_151.0	151.0	14	3.0	3.0	4.3	4.3	19	79	76	—	—	—	372

Im Hinblick auf die Trägheitsmomente der 4-stufigen Getriebe verweisen wir auf unseren Technischen Dienst.

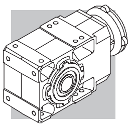

42 EXAKTE ÜBERSETZUNG

i_N	A 05	A 10	A 20	A 30	A 35	A 41	A 50	A 55	A 60	A 70	A 80	A 90
5.0								4.94505				
5.6	5.46559	5.46559	5.35117	5.41311	5.41311	5.24476						
6.3	6.33484	6.33484	6.53846	6.41026	6.41026			6.41026				
7.1	7.21154	7.21154	7.28745	7.02341	7.02341	7.12251						
8.0	8.51648	8.51648	8.37104	8.46154	8.46154	8.33333	7.73684	8.46154	7.86420			
9.0	9.61538	9.61538	9.37500	9.31174	9.31174	9.19732				9.43946		9.67545
10.0	10.55639	10.55639	10.33540	10.45503	10.63348	10.12987	9.73401	10.35503	10.31579	10.22609	9.83278	10.48174
11.2				11.77885	11.77885	11.74089				12.08027	10.65217	12.64214
12.5	12.30769	12.30769	11.96581		13.06878		13.10700	13.07692	12.70370	13.08696	12.27130	13.69565
14.0	13.92857	13.92857	14.07519	13.56522	15.47619	13.75661				15.40468	13.29391	15.57512
16.0	16.44898	16.44898	16.16807	16.34286	16.95652	16.09524	16.57005	15.68047	16.73663	16.68841	15.45151	16.87304
18.0	18.57143	18.57143	18.10714	17.98496		17.76398					19.33779	19.38462
20.0	21.35714	21.35714	21.22449	20.53782	20.42857		20.91813	19.23077	20.5942	19.66555	20.94928	21.00000
22.4	23.77143	23.77143	23.11111	22.75000	22.48120	22.67669				21.30435	22.61538	22.25354
25.0	25.46939	25.46939	26.46429	26.53061	25.67227		24.04795	23.79021	25.71012	23.52000	24.50000	24.10800
28.0	28.57143	28.57143	29.21905	29.30159	28.43750	28.32143	26.43733		27.85263	27.78462	28.22400	29.07692
31.5	32.19048	32.19048	31.30612	33.42857	33.16327		32.38095	29.93134	31.66154	30.10000	30.57600	31.50000
35.5	35.11688	35.11688	35.42857	36.64762	36.62698	35.90476	35.59829		34.30000	35.43077	35.53846	35.82277
40.0	40.85714	40.85714	39.61905	39.26531	41.78571	45.06667	40.93645	40.30303	41.71282	38.38333	38.50000	38.80800
45.0	45.39683	45.39683	43.22078	43.42857	45.80952	48.28571	45.00386		45.18889	45.23077	44.47692	44.58462
50.0	51.25714	51.25714	48.28571	48.28571	49.08163	53.14286	51.67843	50.95166	51.32709	49.00000	48.18333	48.30000
56.0	58.60317	58.60317	53.65079	52.67532	54.28571	58.80952	56.81314		55.60435	53.23314	55.18154	55.03077
63.0	65.92857	65.92857	63.14286	59.42857	60.35714	64.15584	63.89011	64.32168	64.98947	66.94154	66.80237	59.61667
71.0			70.98413	66.03175	65.84416	71.31429	70.23817		70.40526	72.52000	72.36923	68.75077
80.0	76.40816	76.40816	79.85714	76.51429	74.28571	79.23810	81.45055	79.52098	79.71923	79.32781	82.32000	80.37160
90.0	91.61905	91.61905	92.32653	86.66667	82.53968	92.76828	89.54339		86.36250	85.93846	89.18000	87.06923
100.0				97.50000	95.64286		99.53407	101.37762	99.50769	96.21818	104.03077	98.60308
112.2			109.16518	109.07029	105.54155	115.86039	109.42367	123.88531	107.80000	104.23636	115.95524	116.90414
125.0			120.52857	120.46208	116.90972		129.67046	132.73427	123.02769	120.61538	125.61818	126.64615
140.0			146.14286	137.42857	136.33787	146.88312	140.61938	146.80796	144.04260	141.86014	144.73846	139.39301
160.0			163.42857	161.42404	150.57760		154.59118	160.43706	171.46573	169.75499	156.80000	166.12694
180.0			178.28571	178.53968	171.78571	184.36364	173.36264	175.02225	185.75455	183.90123	171.29752	179.97085
200.0			199.17857	198.50794	201.78005	197.53247	190.58777	194.19860	208.73017		214.73193	209.01044
225.0			221.30952	216.55411	223.17460	217.40260	231.98700	208.05260	226.12435	220.25418	232.62626	226.42797
250.0			260.46429	244.31746	248.13492	240.58442	260.88462		264.29053	238.60870		
280.0			292.80952	271.46384	270.69264	291.74026	286.80584	262.64685	286.31474	292.01619	277.28428	281.43590
315.0			329.41071	314.55873	305.39683	324.15584	332.58974		324.19154	316.35088	300.39130	304.88889
355.0				356.29630	339.32981	376.83117	365.63552	324.71066	351.20750	369.38462	353.96864	355.79521
400.0			380.84694	400.83333	393.19841		406.43077		404.66462	400.16667	383.46603	385.44482
450.0							446.81331	413.95862	438.38667	475.76068	442.07937	449.15802
500.0							481.63314	505.86503	500.31262	515.40741	478.91932	486.58785
560.0							574.19580	541.99825	585.77325	595.03590	560.45035	555.29467
630.0							631.24731	655.11801	634.58769	644.62222	607.15455	601.56923
710.0							707.89744	714.67419	697.29399	705.13609	703.46182	707.91953
800.0							778.23340	792.97762	755.40182	855.27273	829.52598	766.91282
900.0										926.54545	898.65315	865.09065
1000.0										1072.13675	1001.43166	1025.1594
1125.0										1161.48148	1084.88430	1110.58935
1250.0										1242.33846	1236.85594	1222.17967
1400.0										1345.86667	1339.92727	1324.02797
1600.0										1583.07692	1557.66545	1506.76450
1800.0										1715.00000		1632.32821

▨ **2x** ▨ **3x** ▨ **4x**

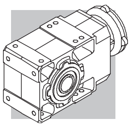

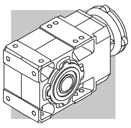

43 ABMESSUNGEN

A 05...M

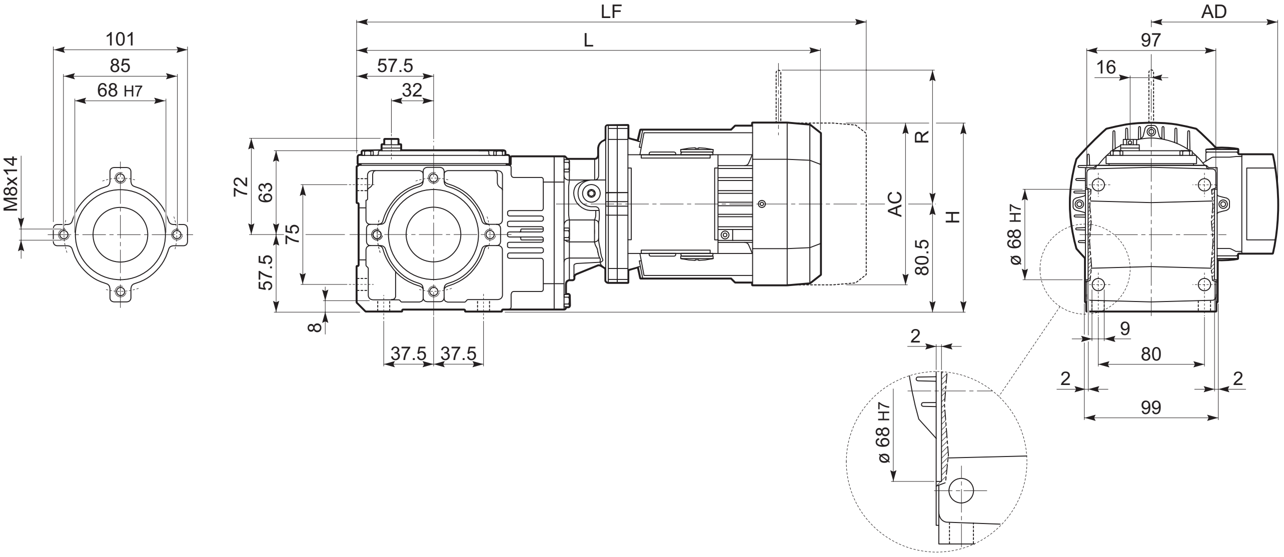

101
85
68 H7
M8x14
LF
L
57.5
32
72
63
75
57.5
8
37.5
37.5
AC
R
H
80.5
AD
97
16
ø 68 H7
2
9
80
2
2
99
ø 68 H7

								M...FD M...FA		M...FD		M...FA	
			AC	H	L	AD	Kg	LF	Kg	R	AD	R	AD
A 05 2	**S05**	**M05**	121	141	360.5	95	7.5	426.5	9	96	122	116	95
A 05 2	**S1**	**M1**	138	149.5	389.5	108	11.5	450.5	14	103	135	124	108
A 05 2	**S2**	**M2S**	156	158.5	418.5	119	15.5	488.5	19	129	146	134	119

A 05...P(IEC)

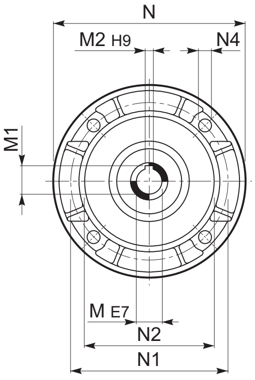

N
M2 H9
N4
M1
M E7
N2
N1

INPUT

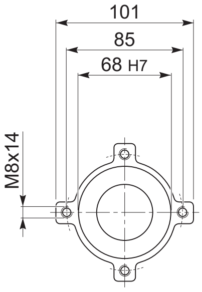

101
85
68 H7
M8x14

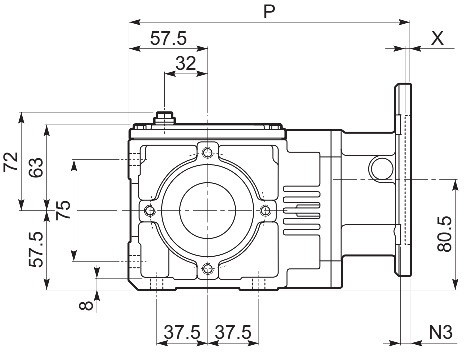

P
57.5
32
X
72
63
75
57.5
8
80.5
37.5
37.5
N3

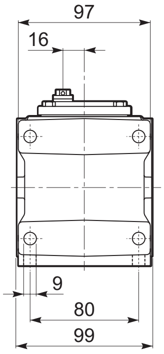

		M	M1	M2	N	N1	N2	N3	N4	X	P	Kg
A 05 2	**P63**	11	12.8	4	140	115	95	7	9.5	3.5	206	5
A 05 2	**P71**	14	16.3	5	160	130	110	7	9.5	4	213	5
A 05 2	**P80**	19	20.8	6	200	165	130	7	11.5	4	223	5.5

# Verkleinerte Passfeder, gelieferte von Bonfiglioli.

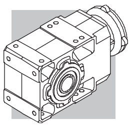

A 05...SK / SC

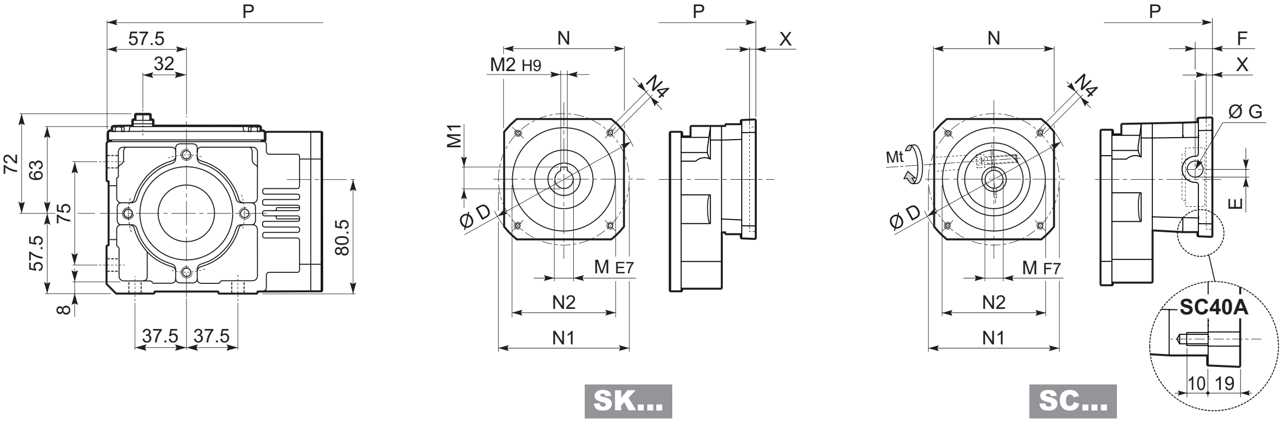
P
57.5
32
72
63
75
57.5
8
37.5
37.5
80.5
N
M2 H9
M1
N4
Ø D
M E7
N2
N1
X
SK...
Mt
F
Ø G
E
M F7
SC40A
10
19
SC...

		D	M	M1	M2	N	N1	N2	N4	X	P	Kg
A 05 2	**SK40A**	74	9	10.4	3	55	63	40	M5x10	3	207.5	5
A 05 2	**SK60A**	102	11	12.8	4	82	75	60	M5x10	3.5	206	5
A 05 2	**SK60B**	102	14	16.3	5	82	75	60	M5x10	4	213	5
A 05 2	**SK80A**	115	14	16.3	5	90	100	80	M6x12	4	213	5

			Mt [Nm]	D	E	F	G	M	N	N1	N2	N4	X	P	Kg
A 05 2	**SC40A**	M5	15	74	10.5	9.5	12.5	9	55	63	40	M5x10	3	226.5	6
A 05 2	**SC60A**	M6	15	102	7	12.5	12.5	11	82	75	60	M5x10	4	233	6
A 05 2	**SC60B**	M6	15	102	7	12.5	12.5	14	82	75	60	M5x10	4	233	6
A 05 2	**SC80A**	M6	15	115	6	12.5	12.5	14	90	100	80	M6x12	4	233	6

A 05...F...

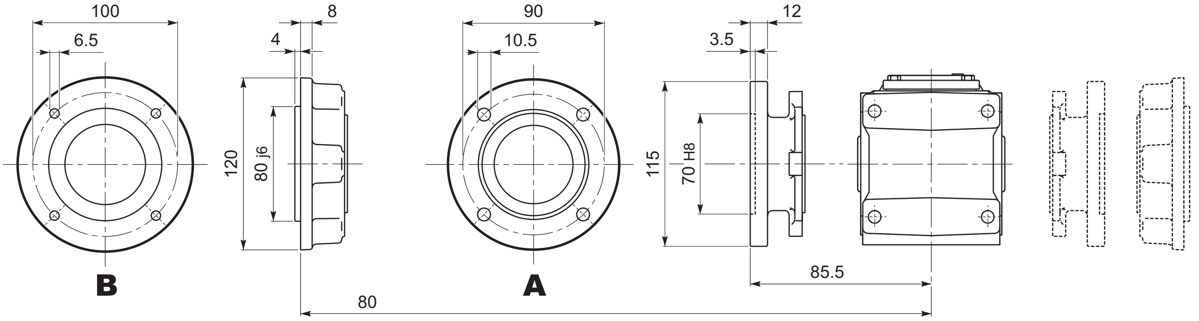
100
6.5
8
4
120
80 j6
B
90
10.5
12
3.5
115
70 H8
A
85.5
80

A 05

A 05...UR

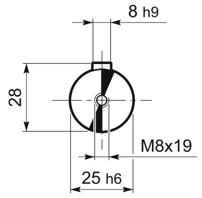
8 h9
28
M8x19
25 h6

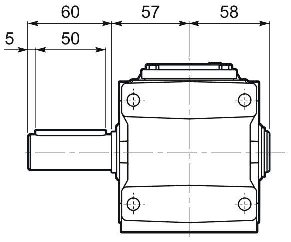

A 05...UD

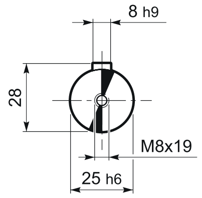
8 h9
28
M8x19
25 h6

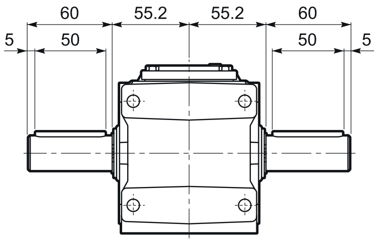
60
55.2
55.2
60
5
50
50
5

A 05...UH

H25

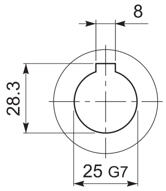

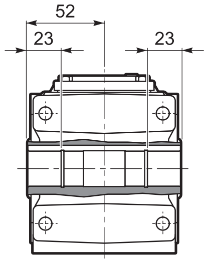

A 05...US

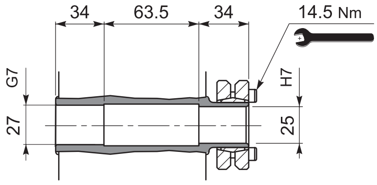
34
63.5
34
14.5 Nm
G7
27
H7
25

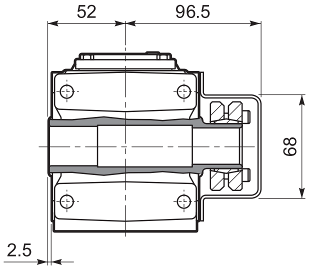

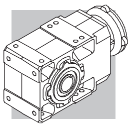

A 10...M

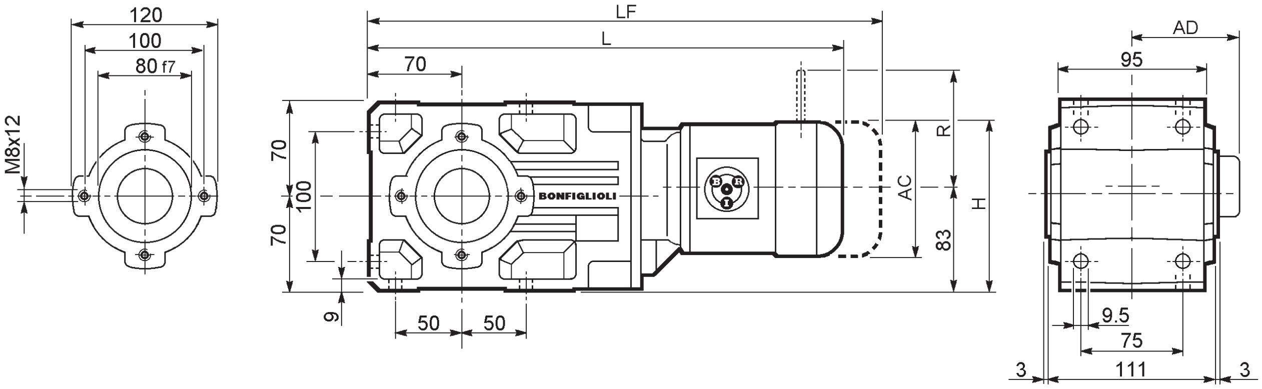

120
100
80 f7
M8x12
LF
L
70
70
100
70
9
50
50
BONFIGLIOLI
AC
R
83
H
AD
95
9.5
75
3
111
3

								M...FD M...FA		M...FD		M...FA	
			AC	H	L	AD	Kg	LF	Kg	R	AD	R	AD
A 10 2	**S05**	**M05**	121	143.5	408.5	95	12	474.5	14	96	122	116	95
A 10 2	**S1**	**M1**	138	152	437.5	108	14	498.5	17	103	135	124	108
A 10 2	**S2**	**M2S**	156	161	466.5	119	18	536.5	22	129	146	134	119
A 10 2	**S3**	**M3S**	195	180.5	509.5	142	23	605.5	30	160	158	160	142
A 10 2	**S3**	**M3L**	195	180.5	541.5	142	30	632.5	37	160	158	160	142

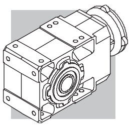

A 10...P(IEC)

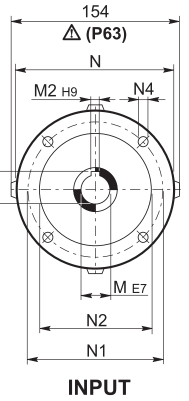
154
⚠ (P63)
N
M2 H9
N4
M1
M E7
N2
N1
INPUT

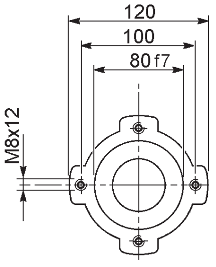
120
100
80 f7
M8x12

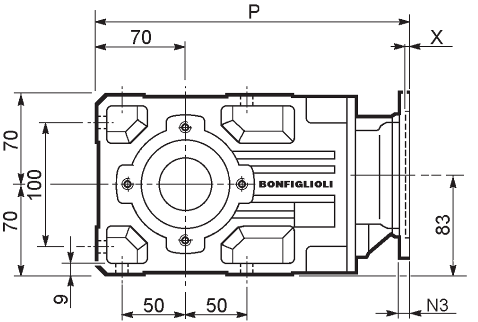
P
70
X
70
100
70
9
BONFIGLIOLI
83
50
50
N3

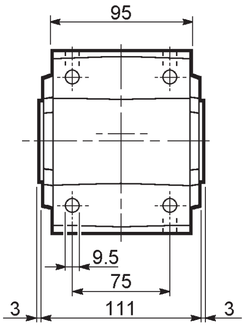
95
9.5
75
3
111
3

		M	M1	M2	N	N1	N2	N3	N4	X	P	Kg
A 10 2	**P63**	11	12.8	4	140	115	95	—	M8x10	4	282.5	8
A 10 2	**P71**	14	16.3	5	160	130	110	—	M8x10	4.5	282.5	9
A 10 2	**P80**	19	21.8	6	200	165	130	—	M10x14.5	4	302	9
A 10 2	**P90**	24	27.3	8	200	165	130	—	M10x14.5	4	302	9
A 10 2	**P100**	28	31.3	8	250	215	180	—	M12x16	4.5	312	13
A 10 2	**P112**	28	31.3	8	250	215	180	—	M12x16	4.5	312	13

A 10...HS

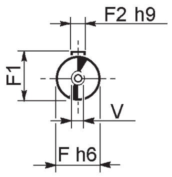
F2 h9
F1
V
F h6

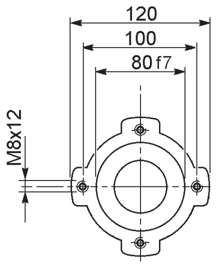
120
100
80 f7
M8x12

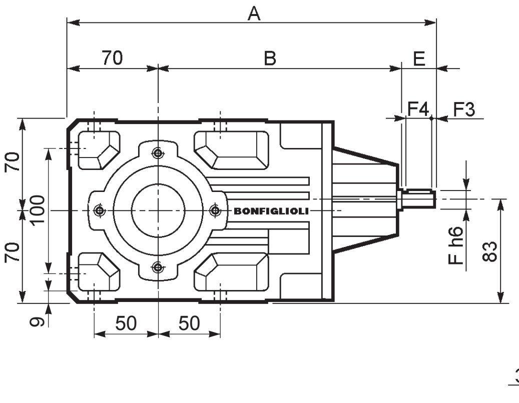
A
70
B
E
F4
F3
70
100
70
9
BONFIGLIOLI
F h6
83
50
50

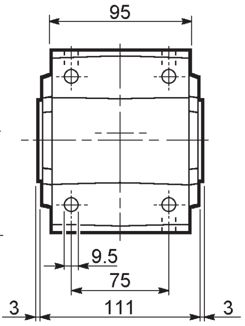
95
9.5
75
3
111
3

		A	B	E	F	F1	F2	F3	F4	V	Kg
A 10 2	**HS**	289.5	179.5	40	16	18	5	2.5	35	M6x16	7.8

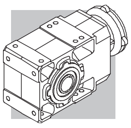

A 10...SK / SC

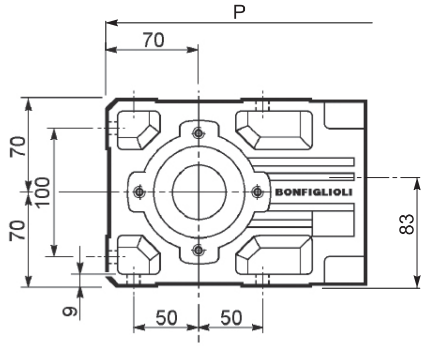
P
70
70
100
70
9
50
50
83
BONFIGLIOLI

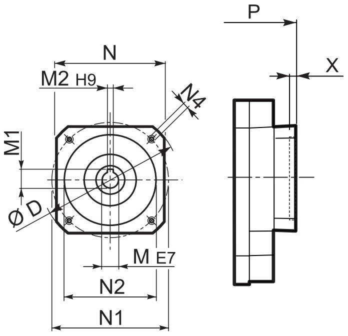
N
M2 H9
N4
M1
Ø D
M E7
N2
N1
P
X

SK...

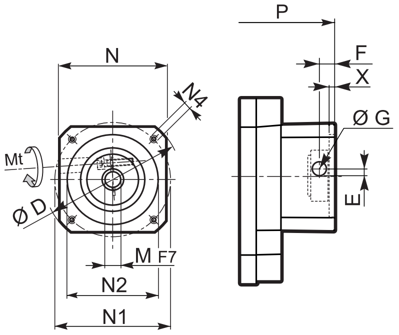
N
N4
Mt
Ø D
M F7
N2
N1
P
F
X
Ø G
E

SC...

		D	M	M1	M2	N	N1	N2	N4	X	P	Kg
A 10 2	**SK60A**	102	11	12.8	4	82	75	60	M5x10	3.5	254	8
A 10 2	**SK60B**	102	14	16.3	5	82	75	60	M5x10	4	261	8
A 10 2	**SK80A**	115	14	16.3	5	90	100	80	M6x12	4	261	8
A 10 2	**SK80C**	120	19	21.8	6	96	100	80	M6x12	4	302	9
A 10 2	**SK95A**	130	14	16.3	5	102	115	95	M8x12	4	302	9
A 10 2	**SK95B**	130	19	21.8	6	102	115	95	M8x12	4	302	9
A 10 2	**SK95C**	130	24	27.3	8	102	115	95	M8x12	4	302	9
A 10 2	**SK110A**	150	19	21.8	6	120	130	110	M8x12	5	302	9
A 10 2	**SK110B**	150	24	27.3	8	120	130	110	M8x12	5	302	9

			Mt [Nm]	D	E	F	G	M	N	N1	N2	N4	X	P	Kg
A 10 2	**SC60A**	M6	15	102	7	12.5	12.5	11	82	75	60	M5x10	4	281	9
A 10 2	**SC60B**	M6	15	102	7	12.5	12.5	14	82	75	60	M5x10	4	281	9
A 10 2	**SC80A**	M6	15	115	6	12.5	12.5	14	90	100	80	M6x12	4	281	9
A 10 2	**SC80C**	M6	15	120	15.5	14.5	17.75	19	96	100	80	M6x12	4	325.5	10
A 10 2	**SC95A**	M6	15	130	16.5	15	17.75	14	102	115	95	M8x16	4	325.5	10
A 10 2	**SC95B**	M6	15	130	16.5	15	17.75	19	102	115	95	M8x16	4	325.5	10
A 10 2	**SC95C**	M6	15	130	16.5	15	17.75	24	102	115	95	M8x16	4	325.5	10
A 10 2	**SC110A**	M6	15	150	16.5	16	17.75	19	120	130	110	M8x16	5	325.5	12
A 10 2	**SC110B**	M6	15	150	16.5	16	17.75	24	120	130	110	M8x16	5	325.5	12

A 10...F...

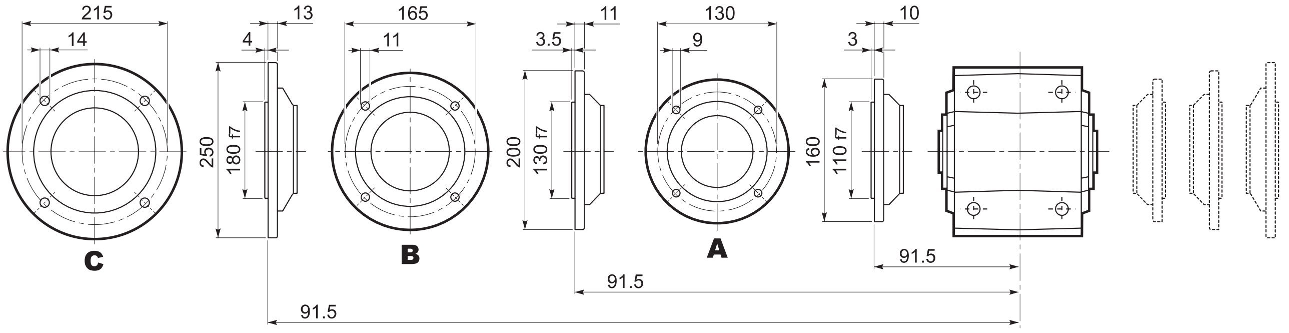
215
14
13
4
250
180 f7
C
165
11
11
3.5
200
130 f7
B
130
9
10
3
160
110 f7
A
91.5
91.5
91.5

A 10

A 10...UR

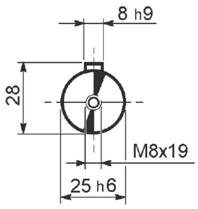
8 h9
28
M8x19
25 h6

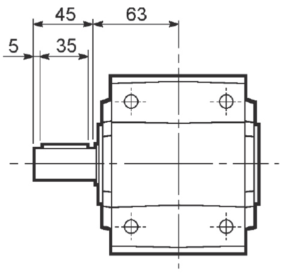

A 10...UD

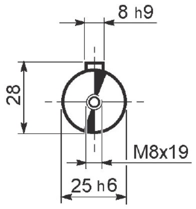
8 h9
28
M8x19
25 h6

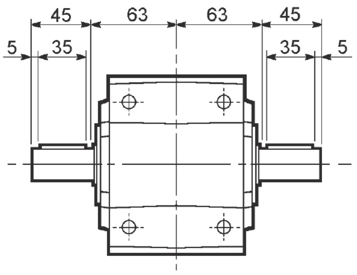
45
63
63
45
5
35
35
5

A 10...UH

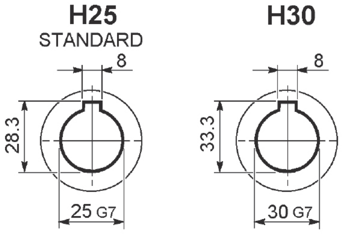
H25
STANDARD
8
28.3
25 G7
H30
8
33.3
30 G7

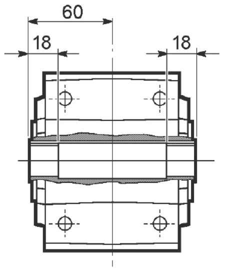

A 10...US

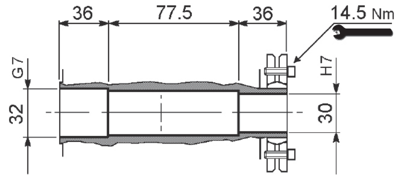
36
77.5
36
14.5 Nm
G7
32
H7
30

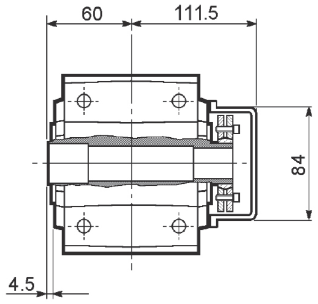
60
111.5
84
4.5

A10...QF

	Ø
QF25	25
QF30	30

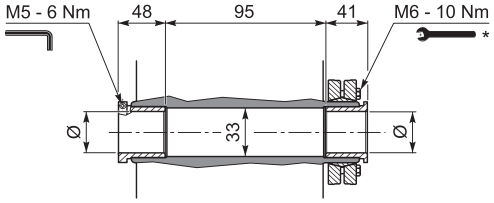
M5 - 6 Nm
48
95
41
M6 - 10 Nm
*
Ø
33
Ø

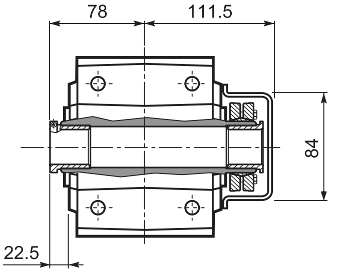
78
111.5
84
22.5

* Befolgen Sie die MONTAGEANLEITUNG die dem Getriebe beiliegt.

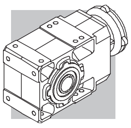

A 20...M

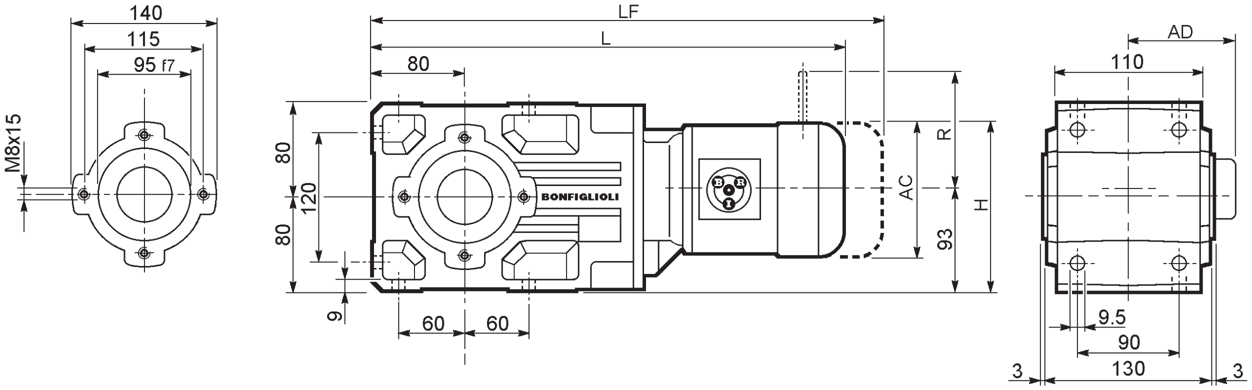
140
115
95 f7
M8x15
LF
L
80
80
120
80
9
60
60
BONFIGLIOLI
AC
R
H
93
AD
110
9.5
90
3
130
3

								M...FD M...FA		M...FD		M...FA	
			AC	H	L	AD	Kg	LF	Kg	R	AD	R	AD
A 20 2	**S05**	**M05**	121	143.5	432	95	16	498	18	96	122	116	95
A 20 2	**S1**	**M1**	138	152	461	108	18	522	21	103	135	124	108
A 20 2	**S2**	**M2S**	156	161	490	119	22	560	26	129	146	134	119
A 20 2	**S3**	**M3S**	195	180.5	533	142	27	629	34	160	158	160	142
A 20 2	**S3**	**M3L**	195	180.5	565	142	34	656	41	160	158	160	142
A 20 3	**S05**	**M05**	121	143.5	457.5	95	16	553.5	18	96	122	116	95
A 20 3	**S1**	**M1**	138	152	486.5	108	19	577.5	21	103	135	124	108
A 20 3	**S2**	**M2S**	156	161	545.5	119	23	615.5	27	129	146	134	119
A 20 3	**S3**	**M3S**	195	180.5	588.5	142	28	684.5	35	160	158	160	142
A 20 3	**S3**	**M3L**	195	180.5	620.5	142	35	711.5	42	160	158	160	142

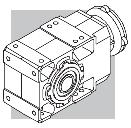

A 20...P(IEC)

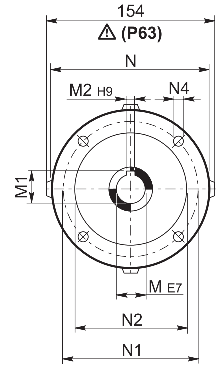
154
⚠ (P63)
N
M2 H9
N4
M1
M E7
N2
N1

INPUT

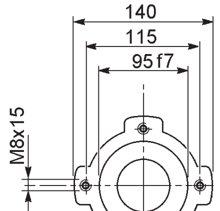
140
115
95 f7
M8x15

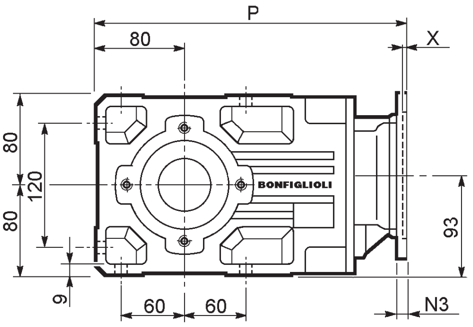
P
80
X
80
120
80
93
9
60
60
N3
BONFIGLIOLI

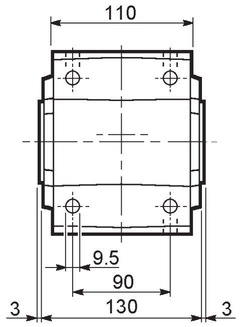
110
9.5
90
3
130
3

		M	M1	M2	N	N1	N2	N3	N4	X	P	Kg
A 20 2	**P63**	11	12.8	4	140	115	95	—	M8x19	4	306	12
A 20 2	**P71**	14	16.3	5	160	130	110	—	M8x16	4.5	306	12
A 20 2	**P80**	19	21.8	6	200	165	130	—	M10x14.5	4	325.5	13
A 20 2	**P90**	24	27.3	8	200	165	130	—	M10x14.5	4	325.5	13
A 20 2	**P100**	28	31.3	8	250	215	180	—	M12x16	4.5	335.5	17
A 20 2	**P112**	28	31.3	8	250	215	180	—	M12x16	4.5	335.5	17
A 20 3	**P63**	11	12.8	4	140	115	95	—	M8x19	4	361.5	13
A 20 3	**P71**	14	16.3	5	160	130	110	—	M8x16	4.5	361.5	13
A 20 3	**P80**	19	21.8	6	200	165	130	—	M10x14.5	4	381	14
A 20 3	**P90**	24	27.3	8	200	165	130	—	M10x14.5	4	381	14
A 20 3	**P100**	28	31.3	8	250	215	180	—	M12x16	4.5	391	18
A 20 3	**P112**	28	31.3	8	250	215	180	—	M12x16	4.5	391	18

A 20...HS

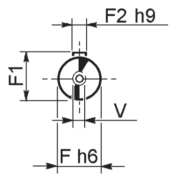
F2 h9
F1
V
F h6

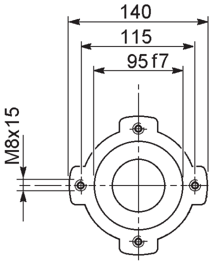
140
115
95 f7
M8x15

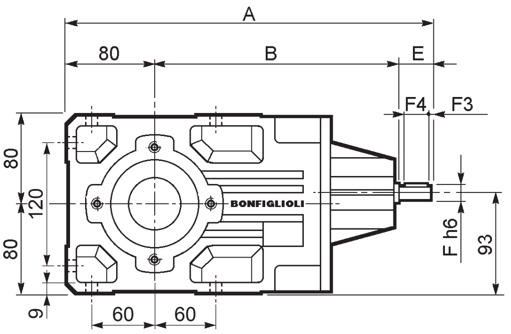
A
80
B
E
F4
F3
80
120
80
F h6
93
9
60
60
BONFIGLIOLI

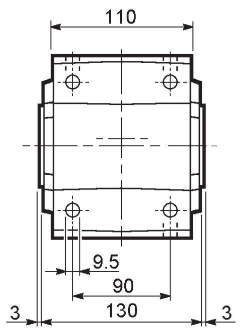
110
9.5
90
3
130
3

		A	B	E	F	F1	F2	F3	F4	V	Kg
A 20 2	**HS**	356	236	40	19	21.5	6	2.5	35	M6x16	11.9
A 20 3		368.5	248.5	40	16	18	5	2.5	35	M6x16	12.2

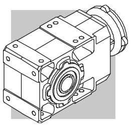

A 20...SK / SC

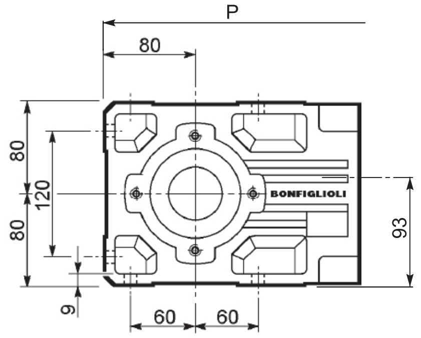
P
80
80
120
80
9
60
60
93
BONFIGLIOLI

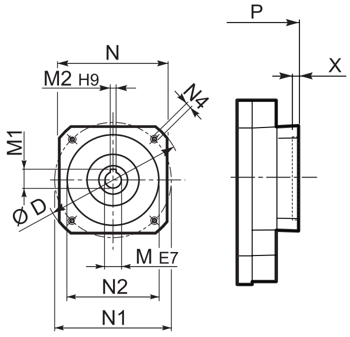
P
N
M2 H9
X
N4
M1
Ø D
M E7
N2
N1

SK...

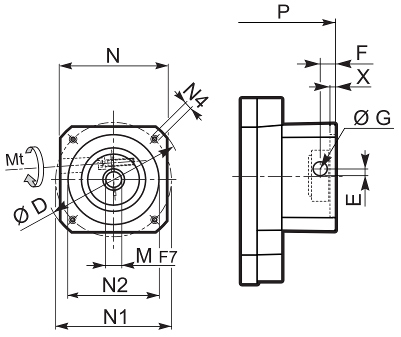
P
N
F
X
Ø G
N4
Mt
Ø D
E
M F7
N2
N1

SC...

		D	M	M1	M2	N	N1	N2	N4	X	P		Kg
											2x	3x	
A 20 2/3	SK60A	102	11	12.8	4	82	75	60	M5x10	3.5	277.5	333	11/12
A 20 2/3	SK60B	102	14	16.3	5	82	75	60	M5x10	4	284.5	340	12/13
A 20 2/3	SK80A	115	14	16.3	5	90	100	80	M6x12	4	284.5	340	12/13
A 20 2/3	SK80C	120	19	21.8	6	96	100	80	M6x12	4	325.5	381	13/14
A 20 2/3	SK95A	130	14	16.3	5	102	115	95	M8x12	4	325.5	381	13/14
A 20 2/3	SK95B	130	19	21.8	6	102	115	95	M8x12	4	325.5	381	13/14
A 20 2/3	SK95C	130	24	27.3	8	102	115	95	M8x12	4	325.5	381	13/14
A 20 2/3	SK110A	150	19	21.8	6	120	130	110	M8x12	5	325.5	381	13/14
A 20 2/3	SK110B	150	24	27.3	8	120	130	110	M8x12	5	325.5	381	13/14

			Mt [Nm]	D	E	F	G	M	N	N1	N2	N4	X	P		Kg
														2x	3x	
A 20 2/3	SC60A	M6	15	102	7	12.5	12.5	11	82	75	60	M5x10	4	304.5	360	12/13
A 20 2/3	SC60B	M6	15	102	7	12.5	12.5	14	82	75	60	M5x10	4	304.5	360	13/14
A 20 2/3	SC80A	M6	15	115	6	12.5	12.5	14	90	100	80	M6x12	4	304.5	360	13/14
A 20 2/3	SC80C	M6	15	120	15.5	14.5	17.75	19	96	100	80	M6x12	4	349	404.5	14/15
A 20 2/3	SC95A	M6	15	130	16.5	15	17.75	14	102	115	95	M8x16	4	349	404.5	14/15
A 20 2/3	SC95B	M6	15	130	16.5	15	17.75	19	102	115	95	M8x16	4	349	404.5	14/15
A 20 2/3	SC95C	M6	15	130	16.5	15	17.75	24	102	115	95	M8x16	4	349	404.5	14/15
A 20 2/3	SC110A	M6	15	150	16.5	16	17.75	19	120	130	110	M8x16	5	349	404.5	15/16
A 20 2/3	SC110B	M6	15	150	16.5	16	17.75	24	120	130	110	M8x16	5	349	404.5	15/16

A 20...F...

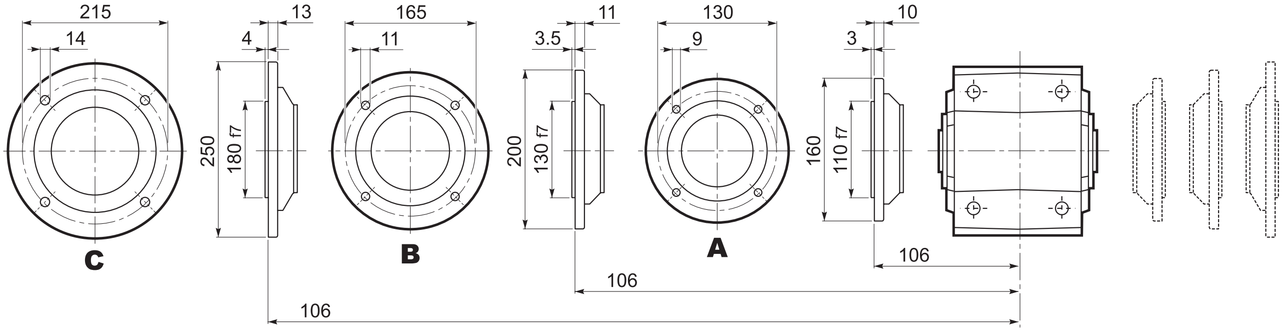
215
14
4
13
250
180 f7
C
165
11
3.5
11
200
130 f7
B
130
9
3
10
160
110 f7
A
106
106
106

A 20

A 20...UR

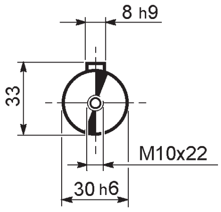
8 h9
33
M10x22
30 h6

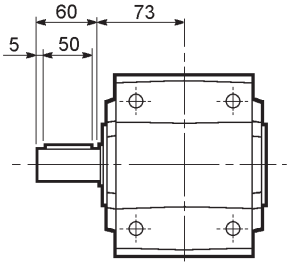

A 20...UD

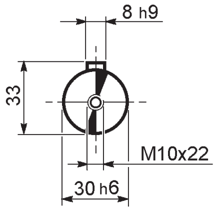
8 h9
33
M10x22
30 h6

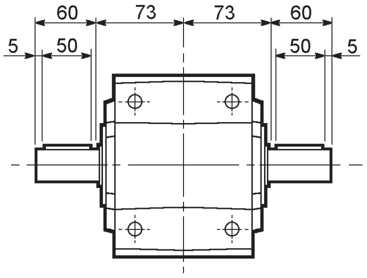
60
73
73
60
5
50
50
5

A 20...UH

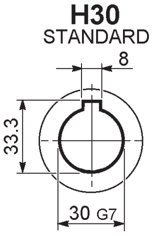
H30
STANDARD
8
33.3
30 G7

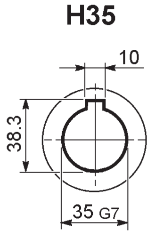
H35
10
38.3
35 G7

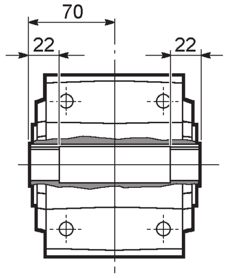

A 20...US

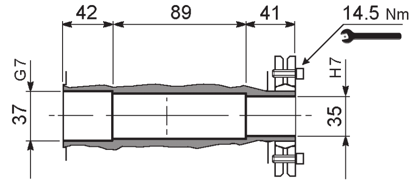
42
89
41
14.5 Nm
G7
37
H7
35

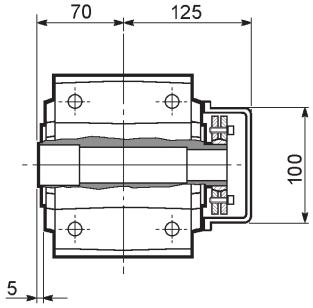

A 20...QF

	Ø
QF25	25
QF30	30

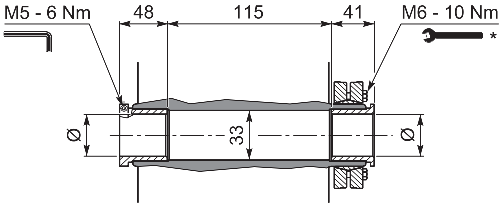
M5 - 6 Nm
48
115
41
M6 - 10 Nm
*
Ø
33
Ø

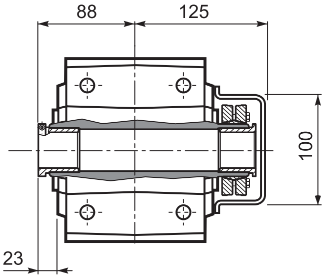
88
125
100
23

A 20...UV

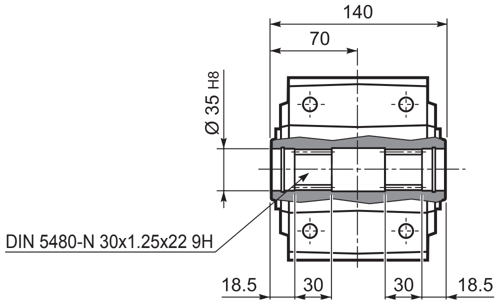
140
70
Ø 35 H8
DIN 5480-N 30x1.25x22 9H
18.5
30
30
18.5

* Befolgen Sie die MONTAGEANLEITUNG die dem Getriebe beiliegt.

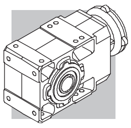

A 30...M

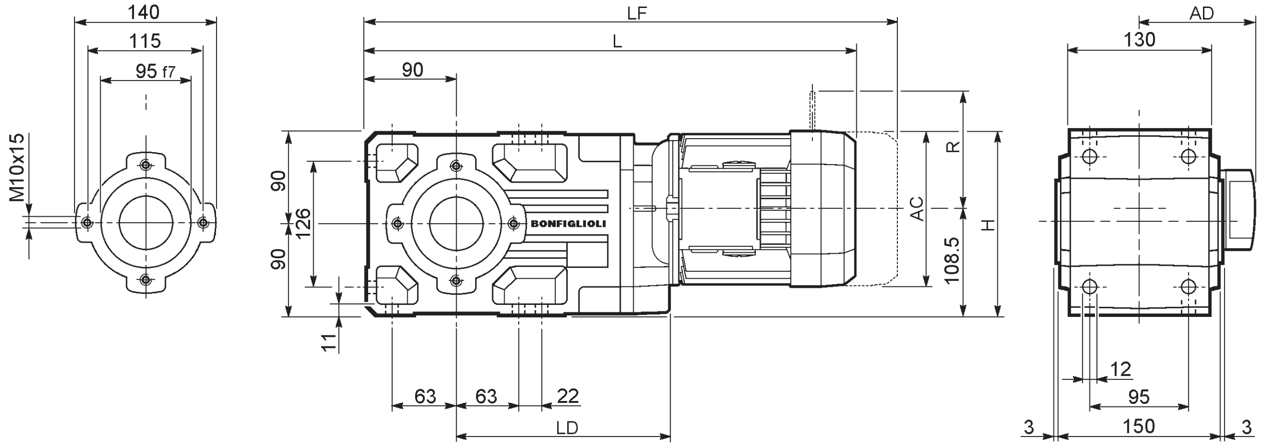
140
115
95 f7
M10x15
LF
L
90
90
126
90
11
BONFIGLIOLI
63
63
22
LD
AC
R
H
108.5
AD
130
12
95
3
150
3

								M...FD M...FA		M...FD		M...FA	
			AC	H	L	LD	AD	Kg	LF	Kg	R	AD	R	AD
A 30 2	**S1**	**M1**	138	177.5	488	201	108	22	549	24	103	135	124	108
A 30 2	**S2**	**M2S**	156	186.5	517	213	119	25	587	29	129	146	134	119
A 30 2	**S3**	**M3S**	195	206	560	223	142	30	656	38	160	158	160	142
A 30 2	**S3**	**M3L**	195	206	592	223	142	38	683	45	160	158	160	142
A 30 3	**S05**	**M05**	121	169	516.5	—	95	21	582.5	22	96	122	116	95
A 30 3	**S1**	**M1**	138	177.5	545.5	—	108	23	606.5	26	103	135	124	108
A 30 3	**S2**	**M2S**	156	186.5	574.5	—	119	25	644.5	29	129	146	134	119
A 30 3	**S3**	**M3S**	195	206	617.5	—	142	30	713.5	38	160	158	160	142
A 30 3	**S3**	**M3L**	195	206	649.5	—	142	38	740.5	45	160	158	160	142

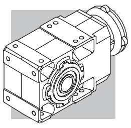

A 30...P(IEC)

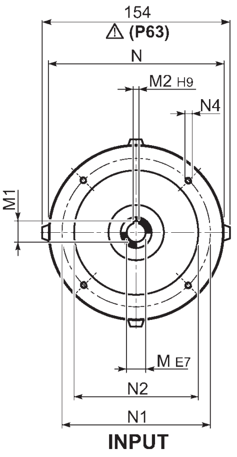
154
⚠ (P63)
N
M2 H9
N4
M1
M E7
N2
N1
INPUT

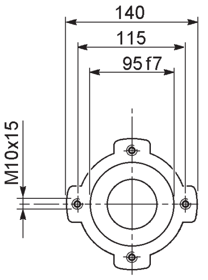
140
115
95 f7
M10x15

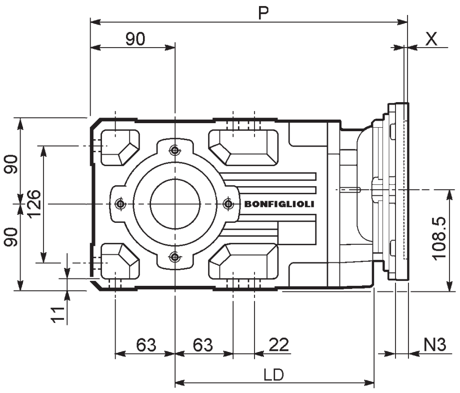
P
90
X
BONFIGLIOLI
90
126
90
108.5
11
63
63
22
N3
LD

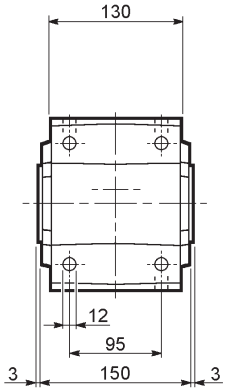
130
12
95
3
150
3

		LD	M	M1	M2	N	N1	N2	N3	N4	X	P	Kg
A 30 2	**P63**	213	11	12.8	4	140	115	95	—	M8x19	4	333	16
A 30 2	**P71**	213	14	16.3	5	160	130	110	—	M8x16	4.5	333	16
A 30 2	**P80**	223	19	21.8	6	200	165	130	—	M10x14.5	4	352.5	17
A 30 2	**P90**	223	24	27.3	8	200	165	130	—	M10x14.5	4	352.5	17
A 30 2	**P100**	223	28	31.3	8	250	215	180	—	M12x16	4.5	362.5	20
A 30 2	**P112**	223	28	31.3	8	250	215	180	—	M12x16	4.5	362.5	20
A 30 3	**P63**	—	11	12.8	4	140	115	95	—	M8x19	4	390.5	17
A 30 3	**P71**	—	14	16.3	5	160	130	110	—	M8x16	4.5	390.5	17
A 30 3	**P80**	—	19	21.8	6	200	165	130	—	M10x14.5	4	410	18
A 30 3	**P90**	—	24	27.3	8	200	165	130	—	M10x14.5	4	410	18
A 30 3	**P100**	—	28	31.3	8	250	215	180	—	M12x16	4.5	420	22
A 30 3	**P112**	—	28	31.3	8	250	215	180	—	M12x16	4.5	420	22

A 30...HS

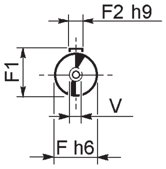
F2 h9
F1
V
F h6

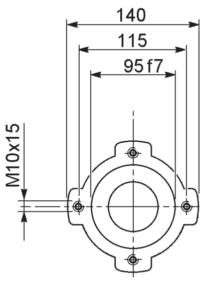
140
115
95 f7
M10x15

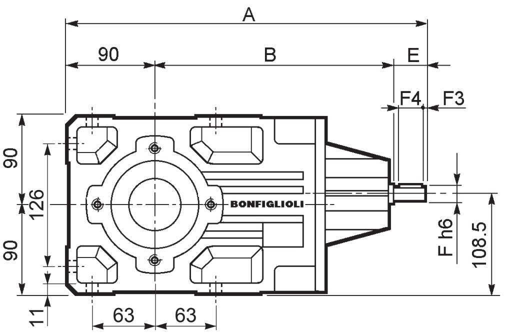
A
90
B
E
F4
F3
BONFIGLIOLI
90
126
90
F h6
108.5
11
63
63

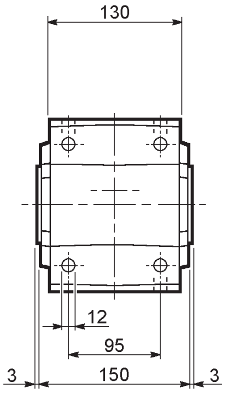
130
12
95
3
150
3

		A	B	E	F	F1	F2	F3	F4	V	Kg
A 30 2	**HS**	383	253	40	19	21.5	6	2.5	35	M6x16	16.7
A 30 3		397.5	267.5	40	16	18	5	2.5	35	M6x16	16.5

A 30...SK / SC

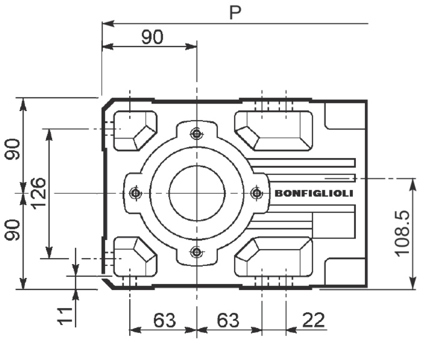
P
90
90
126
90
BONFIGLIOLI
108.5
11
63
63
22

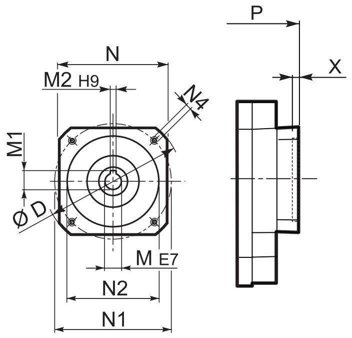
P
N
M2 H9
N4
X
M1
Ø D
M E7
N2
N1

SK...

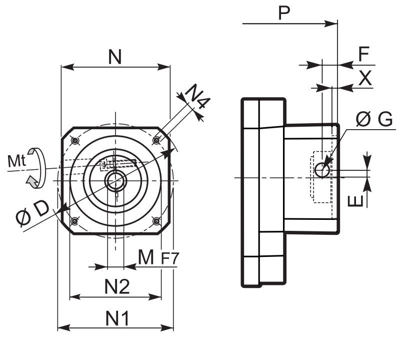
P
N
F
X
N4
Ø G
Mt
Ø D
E
M F7
N2
N1

SC...

		D	M	M1	M2	N	N1	N2	N4	X	P		Kg
											2x	3x	
A 30 2/3	SK60A	102	11	12.8	4	82	75	60	M5x10	3.5	304.5	362	15/16
A 30 2/3	SK60B	102	14	16.3	5	82	75	60	M5x10	4	311.5	369	16/17
A 30 2/3	SK80A	115	14	16.3	5	90	100	80	M6x12	4	311.5	369	16/17
A 30 2/3	SK80C	120	19	21.8	6	96	100	80	M6x12	4	352.5	410	17/18
A 30 2/3	SK95A	130	14	16.3	5	102	115	95	M8x12	4	352.5	410	17/18
A 30 2/3	SK95B	130	19	21.8	6	102	115	95	M8x12	4	352.5	410	17/18
A 30 2/3	SK95C	130	24	27.3	8	102	115	95	M8x12	4	352.5	410	17/18
A 30 2/3	SK110A	150	19	21.8	6	120	130	110	M8x12	5	352.5	410	17/18
A 30 2/3	SK110B	150	24	27.3	8	120	130	110	M8x12	5	352.5	410	17/18
A 30 2	SK130A	188	24	27.3	8	142	165	130	M10x20	5	352.5	—	18

			Mt [Nm]	D	E	F	G	M	N	N1	N2	N4	X	P		Kg
														2x	3x	
A 30 2/3	SC60A	M6	15	102	7	12.5	12.5	11	82	75	60	M5x10	4	331.5	389	16/17
A 30 2/3	SC60B	M6	15	102	7	12.5	12.5	14	82	75	60	M5x10	4	331.5	389	17/18
A 30 2/3	SC80A	M6	15	115	6	12.5	12.5	14	90	100	80	M6x12	4	331.5	389	17/18
A 30 2/3	SC80C	M6	15	120	15.5	14.5	17.75	19	96	100	80	M6x12	4	376	433.5	18/19
A 30 2/3	SC95A	M6	15	130	16.5	15	17.75	14	102	115	95	M8x16	4	376	433.5	18/19
A 30 2/3	SC95B	M6	15	130	16.5	15	17.75	19	102	115	95	M8x16	4	376	433.5	18/19
A 30 2/3	SC95C	M6	15	130	16.5	15	17.75	24	102	115	95	M8x16	4	376	433.5	18/19
A 30 2/3	SC 110A	M6	15	150	16.5	16	17.75	19	120	130	110	M8x16	5	376	433.5	19/20
A 30 2/3	SC 110B	M6	15	150	16.5	16	17.75	24	120	130	110	M8x16	5	376	433.5	19/20
A 30 2	SC 130A	M6	15	188	19	16	17.75	24	142	165	130	M10x20	5	376	—	20

A 30...F...

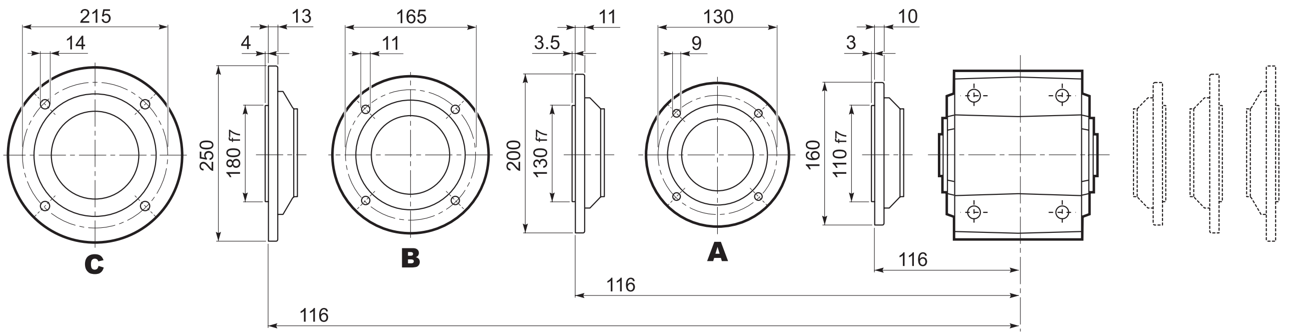
215
14
C
250
180 f7
4
13
165
11
B
200
130 f7
3.5
11
130
9
A
160
110 f7
3
10
116
116
116

A 30

A 30...UR

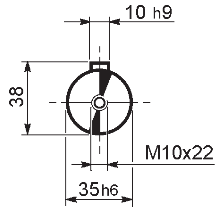

10 h9
38
M10x22
35h6

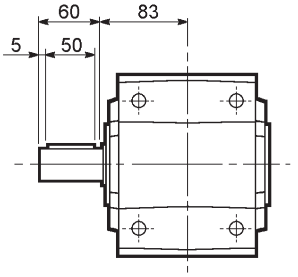

A 30...UD

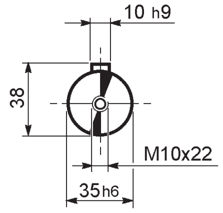

10 h9
38
M10x22
35h6

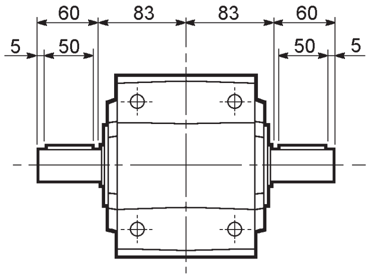

60
83
83
60
5
50
50
5

A 30...UH

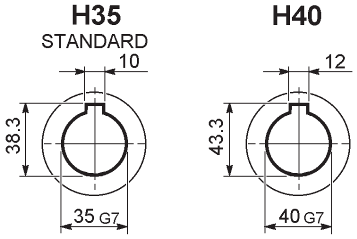

H35
STANDARD
10
38.3
35 G7
H40
12
43.3
40 G7

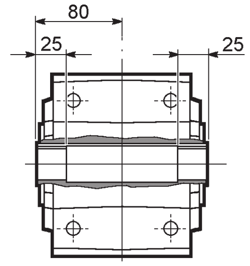

A 30...US

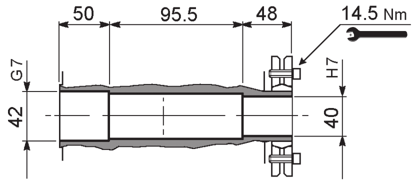

50
95.5
48
14.5 Nm
G7
42
H7
40

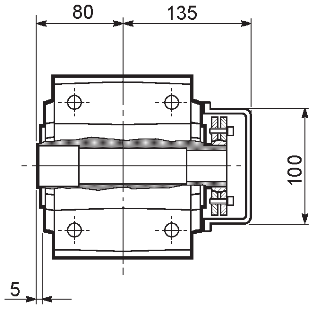

A 30...QF

	Ø
QF35	35
QF40	40

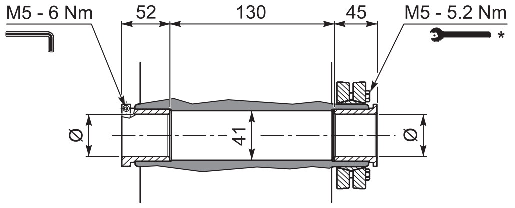

M5 - 6 Nm
52
130
45
M5 - 5.2 Nm
*
Ø
41
Ø

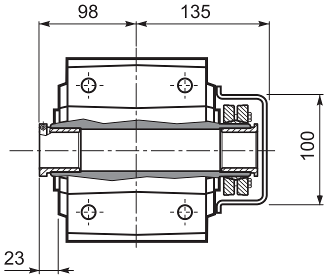

98
135
100
23

A 30...UV

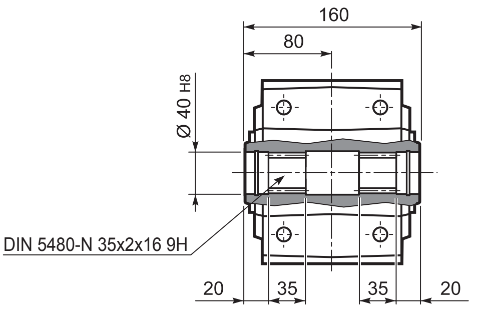

160
80
Ø 40 H8
DIN 5480-N 35x2x16 9H
20
35
35
20

* Befolgen Sie die MONTAGEANLEITUNG die dem Getriebe beiliegt.

A 35...M

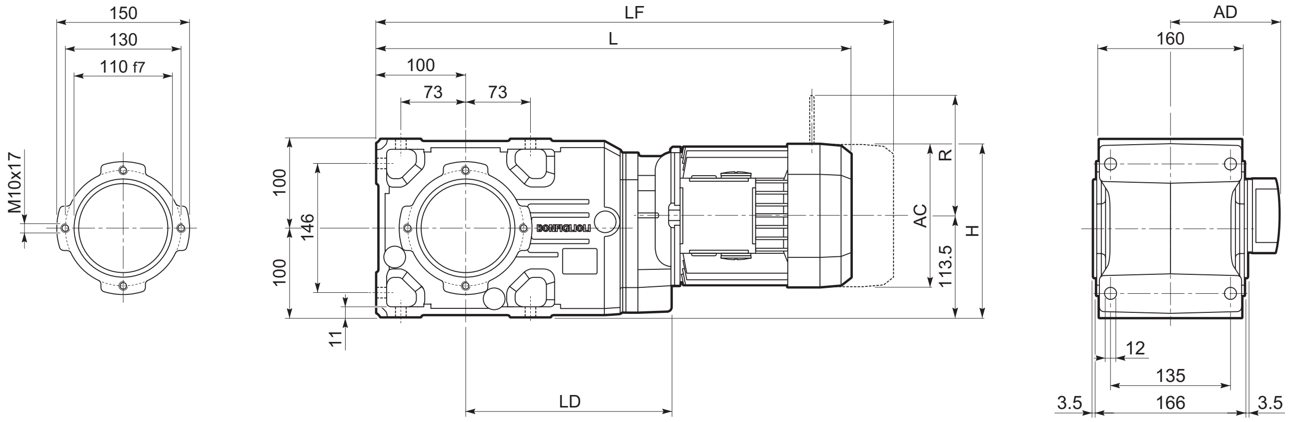
150
130
110 f7
M10x17
LF
L
100
73
73
100
146
100
11
BONFIGLIOLI
LD
R
AC
H
113.5
AD
160
12
135
3.5
166
3.5

									M...FD M...FA		M...FD		M...FA	
			AC	**H**	**L**	**LD**	**AD**	Kg	**LF**	Kg	**R**	**AD**	**R**	**AD**
A 35 2	**S1**	**M1**	138	182.5	514.5	217.5	108	34	575.5	36	103	135	124	108
A 35 2	**S2**	**M2S**	156	191.5	543.5	229.5	119	37	613.5	41	129	146	134	119
A 35 2	**S3**	**M3S**	195	211	586.5	239.5	142	42	682.5	50	160	158	160	142
A 35 2	**S3**	**M3L**	195	211	618.5	239.5	142	50	709.5	57	160	158	160	142
A 35 2	**S4**	**M4S**	258	242.5	726.5	—	193	89	835.5	107	226	210	217	193
A 35 2	**S4**	**M4L**	258	242.5	761.5	—	193	97	860.5	115	226	210	217	193
A 35 3	**S05**	**M05S**	121	174	543	—	95	33	609	34	96	122	116	95
A 35 3	**S1**	**M1**	138	182.5	572	—	108	35	633	38	103	135	124	108
A 35 3	**S2**	**M2S**	156	191.5	601	—	119	37	671	41	129	146	134	119
A 35 3	**S3**	**M3S**	195	211	644	—	142	42	740	50	160	158	160	142
A 35 3	**S3**	**M3L**	195	211	676	—	142	50	767	57	160	158	160	142

A 35...P(IEC)

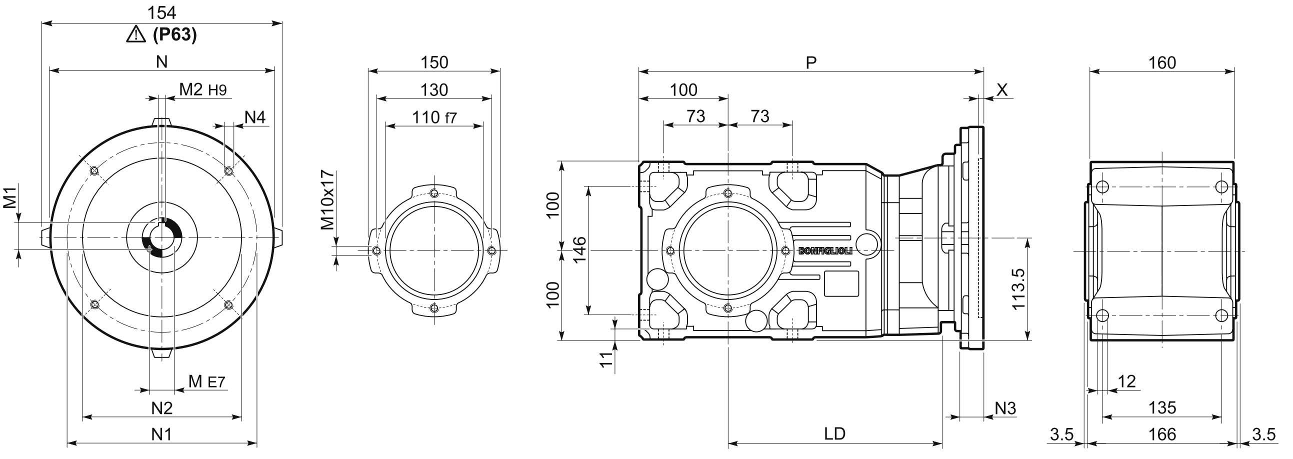
154
(P63)
N
M2 H9
N4
M1
M E7
N2
N1
150
130
110 f7
M10x17
P
100
73
73
X
100
146
100
11
BONFIGLIOLI
113.5
N3
LD
160
12
135
3.5
166
3.5

INPUT

		LD	M	M1	M2	N	N1	N2	N3	N4	X	P	Kg
A 35 2	**P63**	229.5	11	12.8	4	140	115	95	—	M8x19	4	359.5	28
A 35 2	**P71**	229.5	14	16.3	5	160	130	110	—	M8x16	4.5	359.5	28
A 35 2	**P80**	239.5	19	21.8	6	200	165	130	—	M10x14.5	4	379	29
A 35 2	**P90**	239.5	24	27.3	8	200	165	130	—	M10x14.5	4	379	29
A 35 2	**P100**	239.5	28	31.3	8	250	215	180	—	M12x16	4.5	389	32
A 35 2	**P112**	239.5	28	31.3	8	250	215	180	—	M12x16	4.5	389	32
A 35 2	**P132**	—	38	41.3	10	300	265	230	16	14	5	425.5	40
A 35 3	**P63**	—	11	12.8	4	140	115	95	—	M8x19	4	417	29
A 35 3	**P71**	—	14	16.3	5	160	130	110	—	M8x16	4.5	417	29
A 35 3	**P80**	—	19	21.8	6	200	165	130	—	M10x14.5	4	436.5	30
A 35 3	**P90**	—	24	27.3	8	200	165	130	—	M10x14.5	4	436.5	30
A 35 3	**P100**	—	28	31.3	8	250	215	180	—	M12x16	4.5	446.5	34
A 35 3	**P112**	—	28	31.3	8	250	215	180	—	M12x16	4.5	446.5	34

A 35...HS

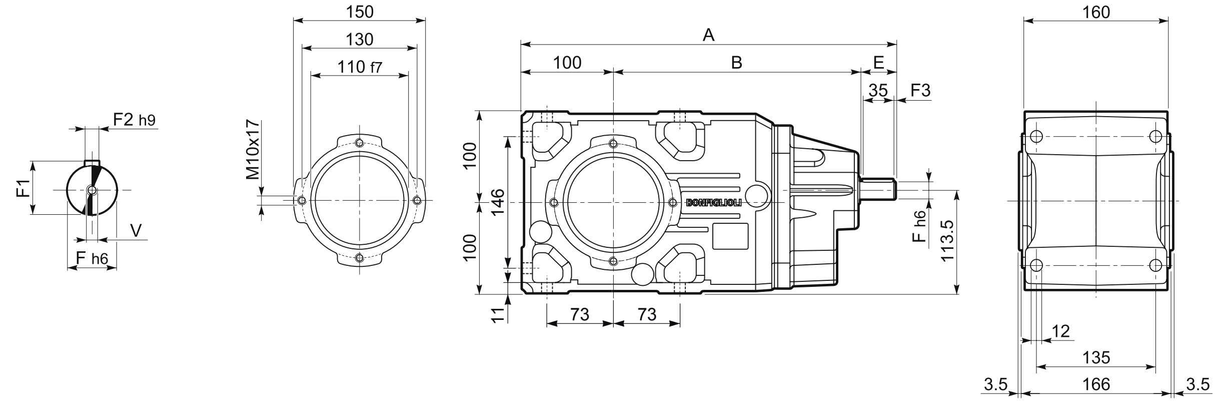
F2 h9
F1
V
F h6
150
130
110 f7
M10x17
A
100
B
E
35
F3
100
146
100
11
BONFIGLIOLI
73
73
F h6
113.5
160
12
135
3.5
166
3.5

		A	B	E	F	F1	F2	F3	F4	V	Kg
A 35 2	**HS**	409.5	269.5	40	19	21.5	6	2.5	35	M6x16	29
A 35 3		424	284	40	16	18	5	2.5	35	M6x16	29

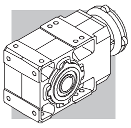

A 35...SK / SC

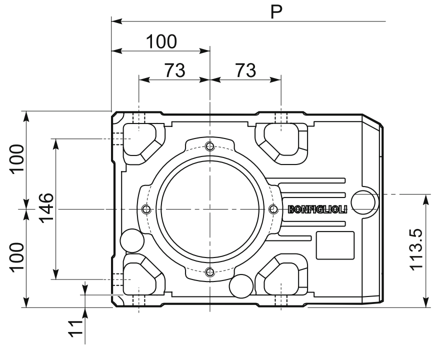

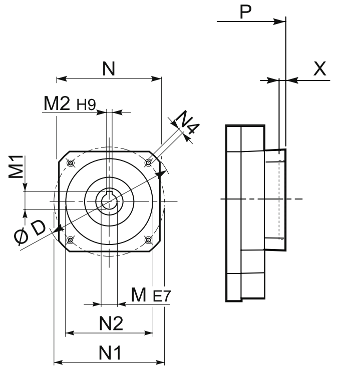

SK...

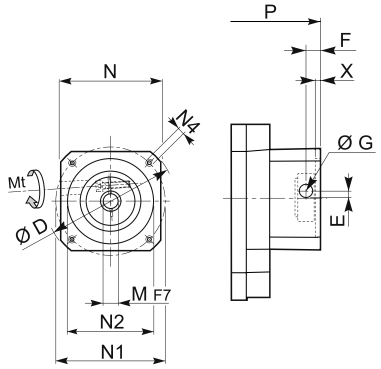

SC...

		D	M	M1	M2	N	N1	N2	N4	X	P		Kg
											2x	3x	
A 35 2/3	SK60A	102	11	12.8	4	82	75	60	M5x10	3.5	331	388.5	27/28
A 35 2/3	SK60B	102	14	16.3	5	82	75	60	M5x10	4	338	395.5	28/29
A 35 2/3	SK80A	115	14	16.3	5	90	100	80	M6x12	4	338	395.5	28/29
A 35 2/3	SK80C	120	19	21.8	6	96	100	80	M6x12	4	379	436.5	29/30
A 35 2/3	SK95A	130	14	16.3	5	102	115	95	M8x12	4	379	436.5	29/30
A 35 2/3	SK95B	130	19	21.8	6	102	115	95	M8x12	4	379	436.5	29/30
A 35 2/3	SK95C	130	24	27.3	8	102	115	95	M8x12	4	379	436.5	29/30
A 35 2/3	SK110A	150	19	21.8	6	120	130	110	M8x12	5	379	436.5	29/30
A 35 2/3	SK110B	150	24	27.3	8	120	130	110	M8x12	5	379	436.5	29/30
A 35 2	SK130A	188	24	27.3	8	142	165	130	M10x20	5	379	—	30

			Mt [Nm]	D	E	F	G	M	N	N1	N2	N4	X	P		Kg
														2x	3x	
A 35 2/3	SC60A	M6	15	102	7	12.5	12.5	11	82	75	60	M5x10	4	358	415.5	28/29
A 35 2/3	SC60B	M6	15	102	7	12.5	12.5	14	82	75	60	M5x10	4	358	415.5	29/30
A 35 2/3	SC80A	M6	15	115	6	12.5	12.5	14	90	100	80	M6x12	4	358	415.5	29/30
A 35 2/3	SC80C	M6	15	120	15.5	14.5	17.75	19	96	100	80	M6x12	4	402.5	460	30/31
A 35 2/3	SC95A	M6	15	130	16.5	15	17.75	14	102	115	95	M8x16	4	402.5	460	30/31
A 35 2/3	SC95B	M6	15	130	16.5	15	17.75	19	102	115	95	M8x16	4	402.5	460	30/31
A 35 2/3	SC95C	M6	15	130	16.5	15	17.75	24	102	115	95	M8x16	4	402.5	460	30/31
A 35 2/3	SC110A	M6	15	150	16.5	16	17.75	19	120	130	110	M8x16	5	402.5	460	32/33
A 35 2/3	SC110B	M6	15	150	16.5	16	17.75	24	120	130	110	M8x16	5	402.5	460	32/33
A 35 2	SC130A	M6	15	188	19	16	17.75	24	142	165	130	M10x20	5	402.5	—	33

A 35...F...

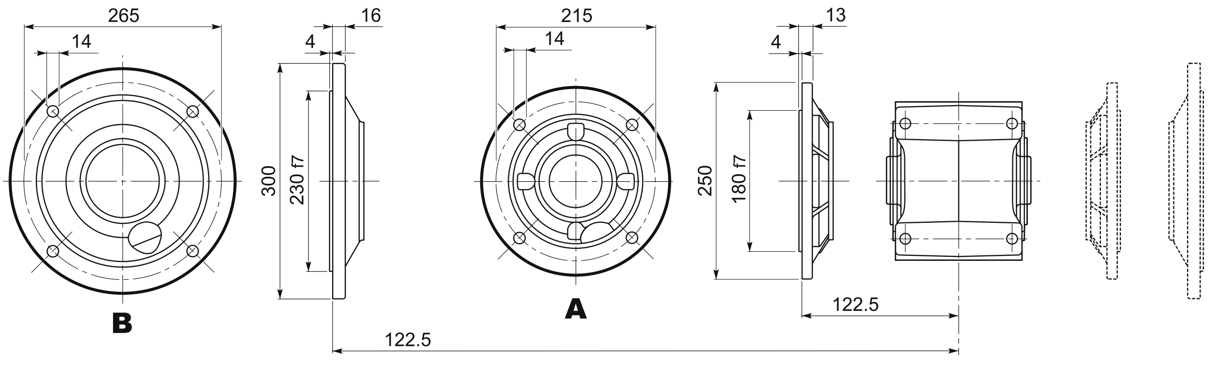

A 35

A 35...UR

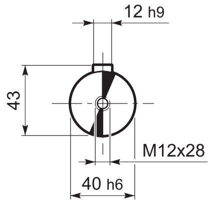
12 h9
43
M12x28
40 h6

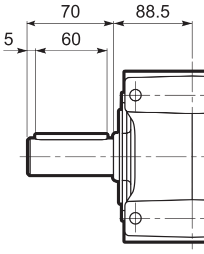

A 35...UD

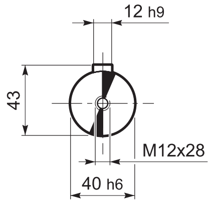
12 h9
43
M12x28
40 h6

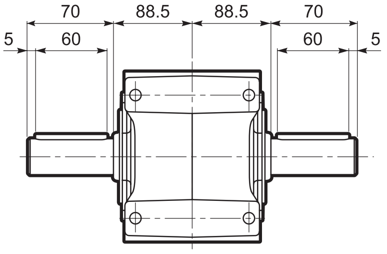
70
88.5
88.5
70
5
60
60
5

A 35...UH

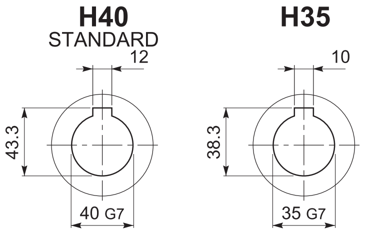
H40
STANDARD
12
43.3
40 G7
H35
10
38.3
35 G7

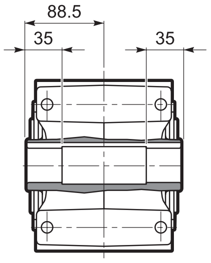

A 35...US

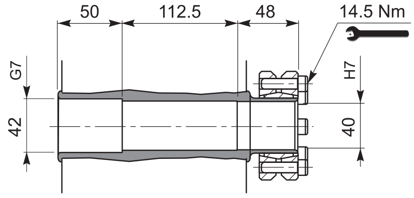
50
112.5
48
14.5 Nm
G7
H7
42
40

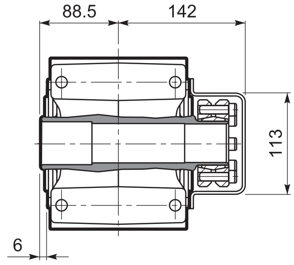
88.5
142
113
6

A 35...QF

	Ø
QF35	35
QF40	40

M$_{n2\ max}$ [Nm]	
A 35 QF35	550

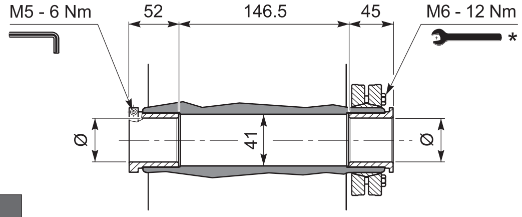
M5 - 6 Nm
52
146.5
45
M6 - 12 Nm
*
Ø
41
Ø

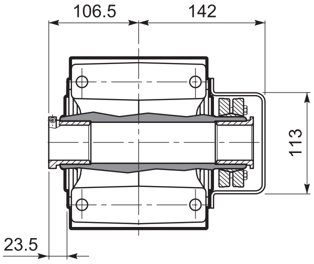
106.5
142
113
23.5

A 35...UV

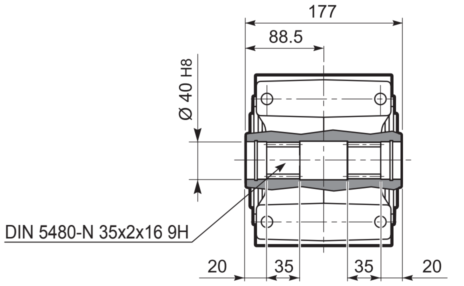
177
88.5
Ø 40 H8
DIN 5480-N 35x2x16 9H
20
35
35
20

* Befolgen Sie die MONTAGEANLEITUNG die dem Getriebe beiliegt.

A 41...M

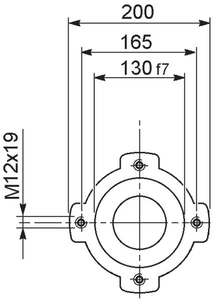
200
165
130 f7
M12x19

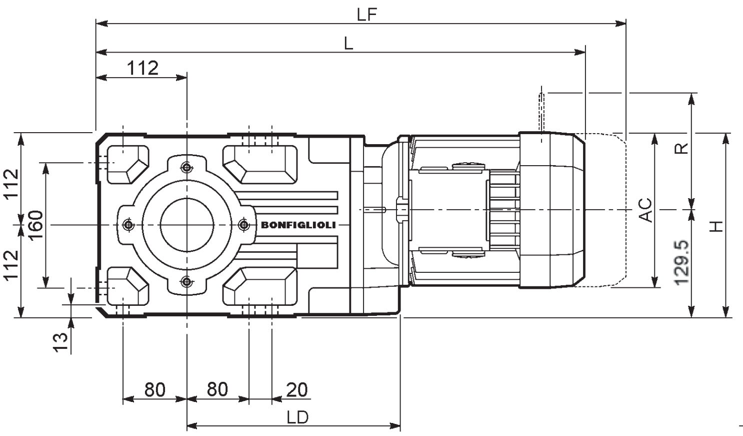
LF
L
112
112
160
112
13
80
80
20
LD
BONFIGLIOLI
R
AC
H
129.5

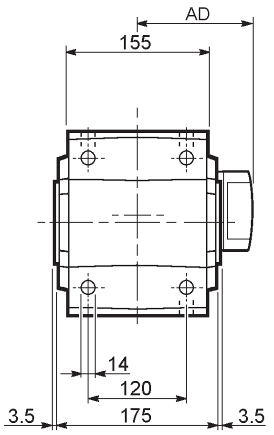
AD
155
14
120
3.5
175
3.5

									M...FD M...FA		M...FD		M...FA	
			AC	H	L	LD	AD	Kg	LF	Kg	R	AD	R	AD
A 41 2	**S1**	**M1**	138	198.5	530	216.5	108	41	591	44	103	135	124	108
A 41 2	**S2**	**M2S**	156	207.5	559	232	119	45	629	49	129	146	134	119
A 41 2	**S3**	**M3S**	195	227	602	248	142	50	698	58	160	158	160	142
A 41 2	**S3**	**M3L**	195	227	634	248	142	58	725	65	160	158	160	142
A 41 2	**S4**	**M4**	258	258.5	742	—	193	92	851	110	226	210	217	193
A 41 2	**S4**	**M4LC**	258	258.5	777	—	193	100	876	118	226	210	217	193
A 41 3	**S05**	**M05**	121	245	562.5	—	95	44	628.5	46	96	122	116	95
A 41 3	**S1**	**M1**	138	198.5	591.5	—	108	46	652.5	49	103	135	124	108
A 41 3	**S2**	**M2S**	156	207.5	620.5	—	119	50	690.5	58	129	146	134	119
A 41 3	**S3**	**M3S**	195	227	663.5	—	142	55	759.5	62	160	158	160	142
A 41 3	**S3**	**M3L**	195	227	695.5	—	142	61	786.5	68	160	158	160	142

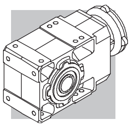

A 41...P(IEC)

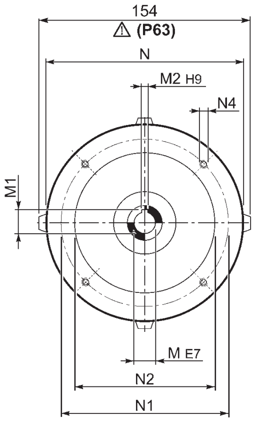
154
⚠ (P63)
N
M2 H9
N4
M1
M E7
N2
N1

INPUT

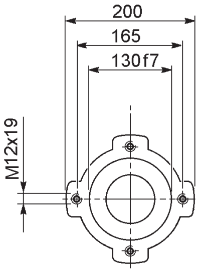
200
165
130f7
M12x19

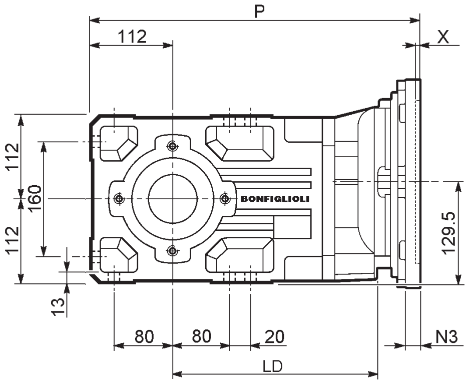
P
112
X
112
160
112
13
129.5
BONFIGLIOLI
80
80
20
N3
LD

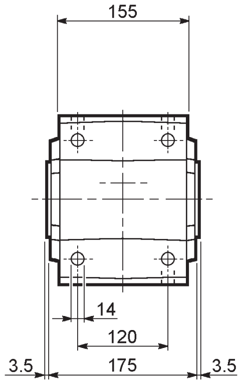
155
14
120
3.5
175
3.5

		LD	M	M1	M2	N	N1	N2	N3	N4	X	P	Kg
A 41 2	**P63**	232	11	12.8	4	140	115	95	—	M8x19	4	375	37
A 41 2	**P71**	232	14	16.3	5	160	130	110	—	M8x16	4.5	375	38
A 41 2	**P80**	248	19	21.8	6	200	165	130	—	M10x14.5	4	394.5	39
A 41 2	**P90**	248	24	27.3	8	200	165	130	—	M10x14.5	4	394.5	39
A 41 2	**P100**	—	28	31.3	8	250	215	180	—	M12x16	4.5	404.5	43
A 41 2	**P112**	—	28	31.3	8	250	215	180	—	M12x16	4.5	404.5	43
A 41 2	**P132**	—	38	41.3	10	300	265	230	16	14	5	441	46
A 41 3	**P63**	—	11	12.8	4	140	115	95	—	M8x19	4	436.5	39
A 41 3	**P71**	—	14	16.3	5	160	130	110	—	M8x16	4.5	436.5	39
A 41 3	**P80**	—	19	21.8	6	200	165	130	—	M10x14.5	4	456	40
A 41 3	**P90**	—	24	27.3	8	200	165	130	—	M10x14.5	4	456	40
A 41 3	**P100**	—	28	31.3	8	250	215	180	—	M12x16	4.5	466	44
A 41 3	**P112**	—	28	31.3	8	250	215	180	—	M12x16	4.5	466	44

A 41...HS

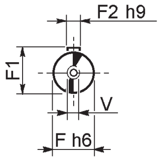
F2 h9
F1
V
F h6

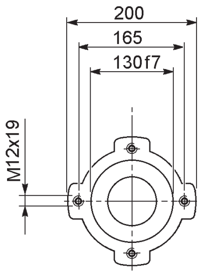
200
165
130f7
M12x19

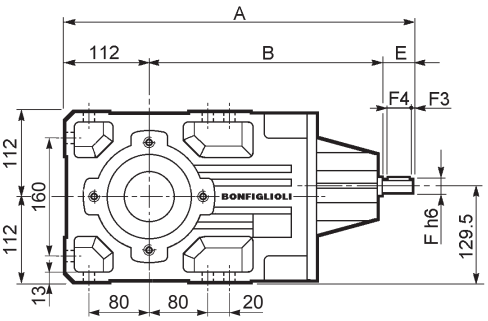
A
112
B
E
F4
F3
112
160
112
13
BONFIGLIOLI
F h6
129.5
80
80
20

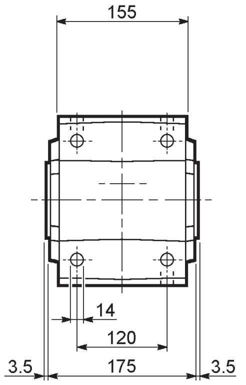
155
14
120
3.5
175
3.5

		A	B	E	F	F1	F2	F3	F4	V	Kg
A 41 2	**HS**	464	302.5	50	24	27	8	2.5	45	M8x19	40.7
A 41 3		486.5	334.5	40	19	21.5	6	2.5	35	M6x16	39.5

A 41...SK / SC

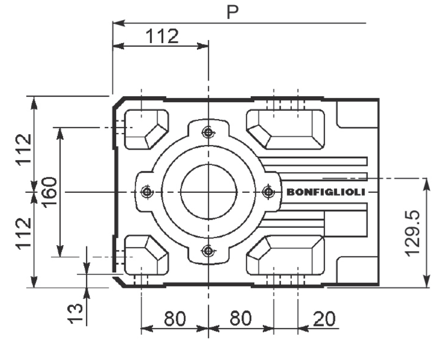

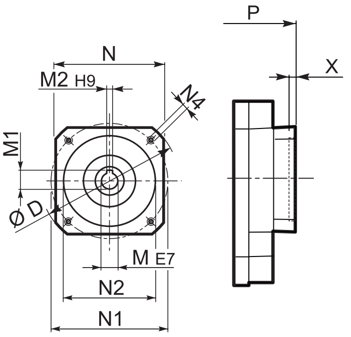

SK...

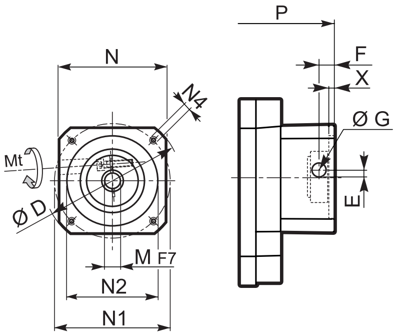

SC...

		D	M	M1	M2	N	N1	N2	N4	X	P		Kg
											2x	3x	
A41 3	**SK60A**	102	11	12.8	4	82	75	60	M5x10	3.5	—	408	40
A41 3	**SK60B**	102	14	16.3	5	82	75	60	M5x10	4	—	415	40
A41 3	**SK80A**	115	14	16.3	5	90	100	80	M6x12	4	—	415	40
A41 2	**SK80B**	120	14	16.3	5	96	100	80	M6x12	4	394.5	—	39
A41 2/3	**SK80C**	120	19	21.8	6	96	100	80	M6x12	4	394.5	456	39/40
A41 2/3	**SK95A**	130	14	16.3	5	102	115	95	M8x12	4	394.5	456	39/40
A41 2/3	**SK95B**	130	19	21.8	6	102	115	95	M8x12	4	394.5	456	39/41
A41 2/3	**SK95C**	130	24	27.3	8	102	115	95	M8x12	4	394.5	456	39/44
A41 2/3	**SK110A**	150	19	21.8	6	120	130	110	M8x12	5	394.5	456	39/44
A41 2/3	**SK110B**	150	24	27.3	8	120	130	110	M8x12	5	394.5	456	39/44
A41 2	**SK130A**	188	24	27.3	8	142	165	130	M10x20	5	394.5	—	41
A41 2	**SK130B**	189	32	35.3	10	160	165	130	M10x20	5	441	—	43
A41 2	**SK180A**	240	32	35.3	10	192	215	180	M12x19	5	441	—	43
A41 2	**SK180B**	240	38	41.3	10	192	215	180	M12x19	5	441	—	43

			Mt [Nm]	D	E	F	G	M	N	N1	N2	N4	X	P		Kg
														2x	3x	
A41 3	**SC60A**	M6	15	102	7	12.5	12.5	11	82	75	60	M5x10	4	—	435	41
A41 3	**SC60B**	M6	15	102	7	12.5	12.5	14	82	75	60	M5x10	4	—	435	41
A41 3	**SC80A**	M6	15	115	6	12.5	12.5	14	90	100	80	M6x12	4	—	435	41
A41 2	**SC80B**	M6	15	120	15.5	14.5	17.75	14	96	100	80	M6x12	4	418	—	40
A41 2/3	**SC80C**	M6	15	120	15.5	14.5	17.75	19	96	100	80	M6x12	4	418	479.5	40/41
A41 2/3	**SC95A**	M6	15	130	16.5	15	17.75	14	102	115	95	M8x16	4	418	479.5	40/42
A41 2/3	**SC95B**	M6	15	130	16.5	15	17.75	19	102	115	95	M8x16	4	418	479.5	40/42
A41 2/3	**SC95C**	M6	15	130	16.5	15	17.75	24	102	115	95	M8x16	4	418	479.5	40/43
A41 2/3	**SC110A**	M6	15	150	16.5	16	17.75	19	120	130	110	M8x16	5	418	479.5	41/47
A41 2/3	**SC110B**	M6	15	150	16.5	16	17.75	24	120	130	110	M8x16	5	418	479.5	41/47
A41 2	**SC130A**	M6	15	188	19	16	17.75	24	142	165	130	M10x20	5	418	—	42
A41 2	**SC130B**	M8	36	189	20	17	17.75	32	160	165	130	M10x20	5	464	—	46
A41 2	**SC180A**	M8	36	240	20	17.5	17.75	32	192	215	180	M12x24	5	468	—	46
A41 2	**SC180B**	M8	36	240	20	17.5	17.75	38	192	215	180	M12x24	5	468	—	46

A 41...F...

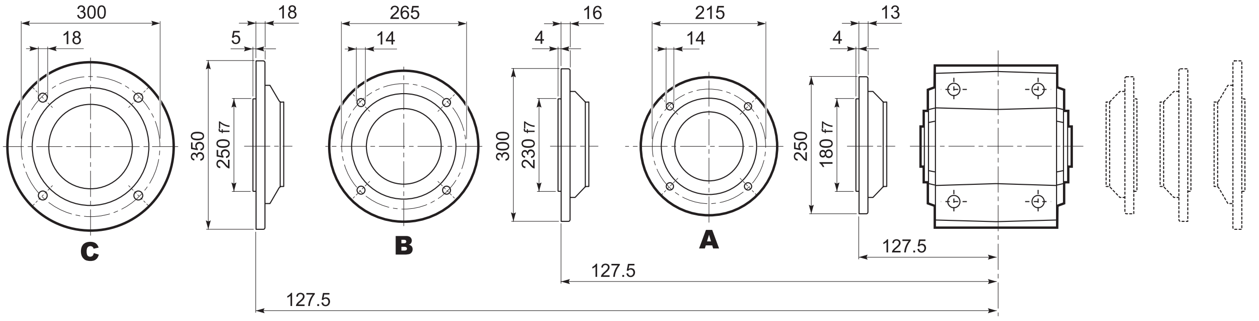

A 41

A 41...UR

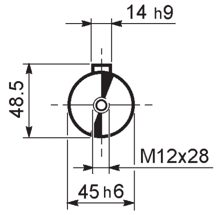
14 h9
48.5
M12x28
45 h6

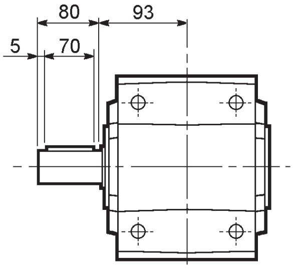

A 41...UD

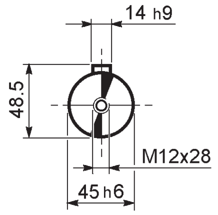
14 h9
48.5
M12x28
45 h6

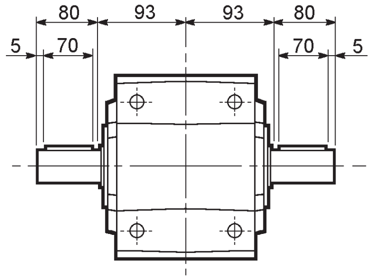
80
93
93
80
5
70
70
5

A 41...UH

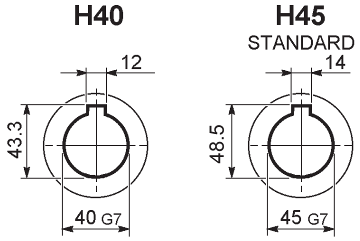
H40
H45
STANDARD
12
14
43.3
48.5
40 G7
45 G7

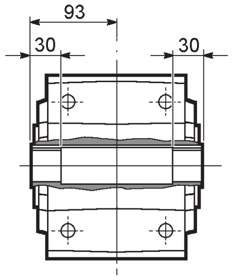

A 41...US

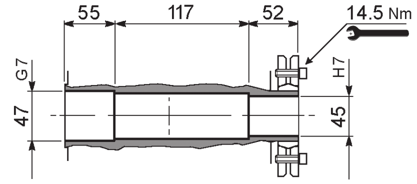
55
117
52
14.5 Nm
G7
47
H7
45

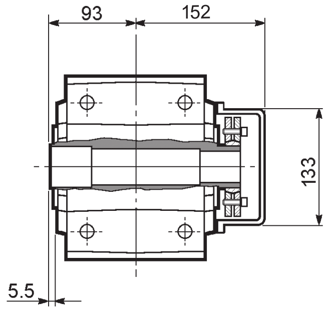
93
152
133
5.5

A 41...QF

	Ø
QF40	40
QF45	45

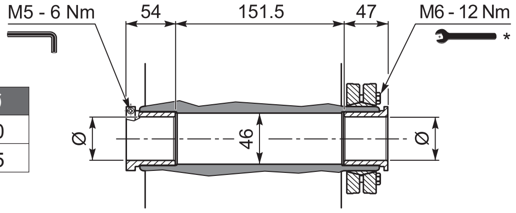
M5 - 6 Nm
54
151.5
47
M6 - 12 Nm
*
Ø
46
Ø

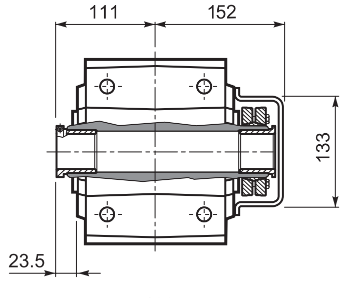
111
152
133
23.5

A 41...UV

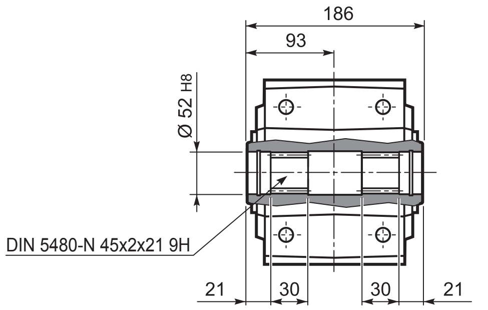
186
93
Ø 52 H8
DIN 5480-N 45x2x21 9H
21
30
30
21

* Befolgen Sie die MONTAGEANLEITUNG die dem Getriebe beiliegt.

A 50...M

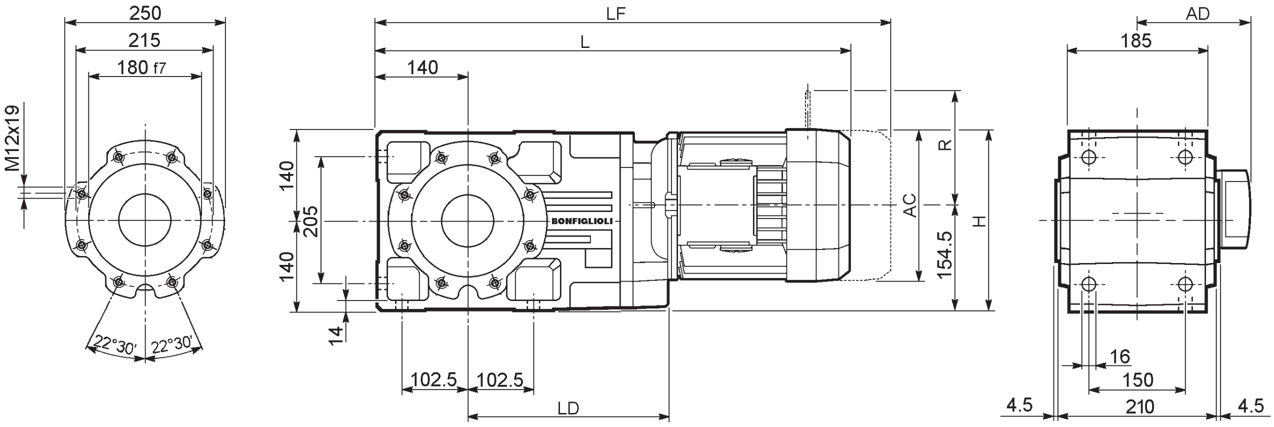
250
215
180 f7
M12x19
22°30′
22°30′
LF
L
140
140
205
140
14
102.5
102.5
LD
BONFIGLIOLI
R
AC
H
154.5
AD
185
16
150
4.5
210
4.5

									M...FD M...FA		M...FD		M...FA	
			AC	H	L	LD	AD	Kg	LF	Kg	R	AD	R	AD
A 50 2/3	**S1**	**M1**	138	223	609.5	—	108	66	670.5	69	103	135	124	108
A 50 2/3	**S2**	**M2S**	156	232	638.5	284.5	119	68	708.5	72	129	146	134	119
A 50 2/3	**S3**	**M3S**	195	251.5	681.5	299.5	142	73	777.5	81	160	158	160	142
A 50 2/3	**S3**	**M3L**	195	251.5	713.5	299.5	142	81	804.5	88	160	158	160	142
A 50 2/3	**S4**	**M4**	258	283	821.5	284.5	193	115	930.5	133	226	210	217	193
A 50 2/3	**S4**	**M4LC**	258	283	856.5	284.5	193	123	955.5	141	226	210	217	193
A 50 2/3	**S5**	**M5S**	310	309	908	—	245	143	1048	173	266	245	247	245
A 50 2/3	**S5**	**M5L**	310	309	952	—	245	159	1092	189	266	245	247	245
A 50 4	**S1**	**M1**	138	223	681	—	108	67	742	70	103	135	124	108
A 50 4	**S2**	**M2S**	156	232	710	—	119	71	780	75	129	146	134	119
A 50 4	**S3**	**M3S**	195	251.5	753	—	142	76	849	76	160	158	160	142
A 50 4	**S3**	**M3L**	195	251.5	785	—	142	83	876	78	160	158	160	142

A 50...P(IEC)

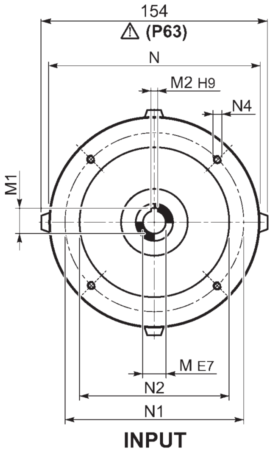
154
⚠ (P63)
N
M2 H9
N4
M1
M E7
N2
N1
INPUT

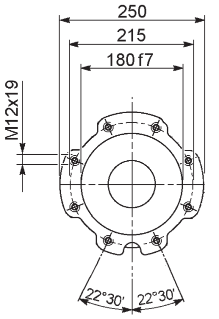
250
215
180 f7
M12x19
22°30'
22°30'

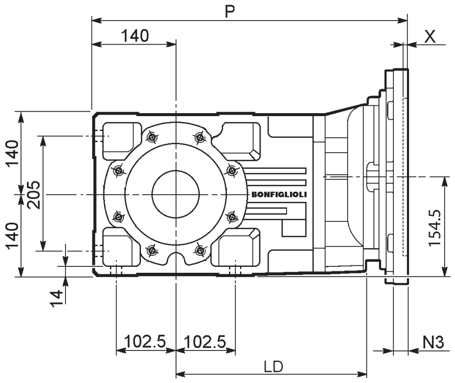
P
140
X
140
205
140
154.5
14
102.5
102.5
LD
N3
BONFIGLIOLI

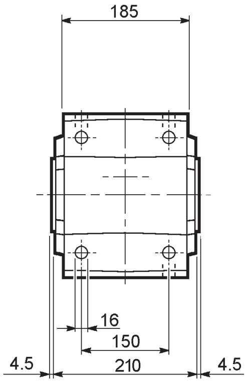
185
16
150
4.5
210
4.5

		LD	M	M1	M2	N	N1	N2	N3	N4	X	P	Kg
A 50 2/3	**P63**	284.5	11	12.8	4	140	115	95	—	M8x19	4	454.5	60
A 50 2/3	**P71**	284.5	14	16.3	5	160	130	110	—	M8x16	4.5	454.5	60
A 50 2/3	**P80**	299.5	19	21.8	6	200	165	130	—	M10x14.5	4	474	61
A 50 2/3	**P90**	299.5	24	27.3	8	200	165	130	—	M10x14.5	4	474	61
A 50 2/3	**P100**	284.5	28	31.3	8	250	215	180	—	M12x16	4.5	484	65
A 50 2/3	**P112**	284.5	28	31.3	8	250	215	180	—	M12x16	4.5	484	65
A 50 2/3	**P132**	284.5	38	41.3	10	300	265	230	16	14	5	520.5	68
A 50 2/3	**P160**	—	42	45.3	12	350	300	250	23	18	5.5	571	72
A 50 2/3	**P180**	—	48	51.8	14	350	300	250	23	18	5.5	571	72
A 50 4	**P63**	—	11	12.8	4	140	115	95	—	M8x19	4	526	62
A 50 4	**P71**	—	14	16.3	5	160	130	110	—	M8x16	4.5	526	62
A 50 4	**P80**	—	19	21.8	6	200	165	130	—	M10x14.5	4	545.5	63
A 50 4	**P90**	—	24	27.3	8	200	165	130	—	M10x14.5	4	545.5	63
A 50 4	**P100**	—	28	31.3	8	250	215	180	—	M12x16	4.5	555.5	67
A 50 4	**P112**	—	28	31.3	8	250	215	180	—	M12x16	4.5	555.5	67

A 50...HS

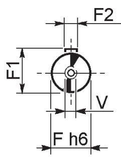
F2 h9
F1
V
F h6

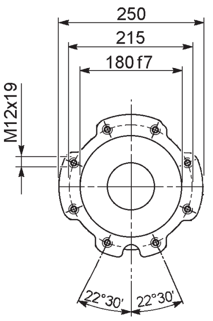
250
215
180 f7
M12x19
22°30'
22°30'

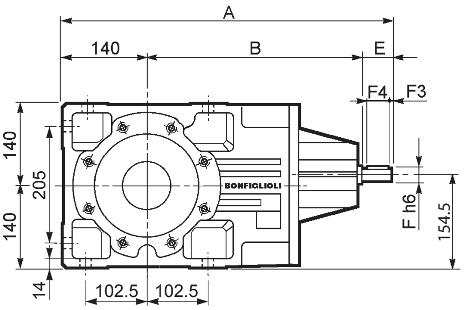
A
140
B
E
F4
F3
140
205
140
F h6
154.5
14
102.5
102.5
BONFIGLIOLI

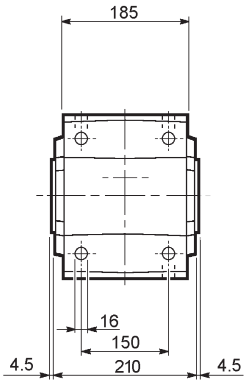
185
16
150
4.5
210
4.5

		A	B	E	F	F1	F2	F3	F4	V	Kg
A 50 2	**HS**	543.5	353.5	50	24	27	8	2.5	45	M8x19	72
A 50 3		543.5	353.5	50	24	27	8	2.5	45	M8x19	76
A 50 4		576	396	40	19	21.5	6	2.5	35	M6x16	77

A 50...SK / SC

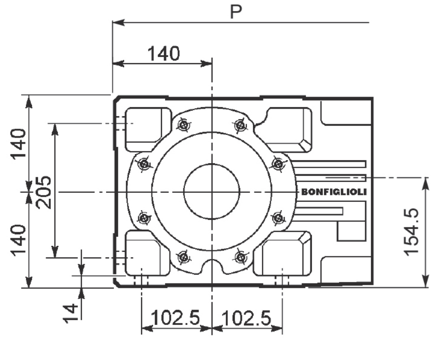

P
140
140
205
140
14
102.5
102.5
154.5
BONFIGLIOLI

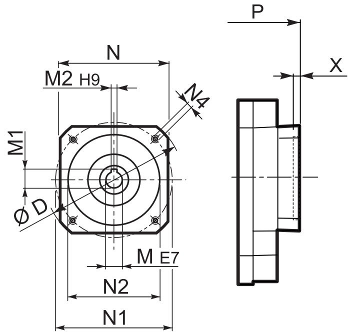

P
N
M2 H9
N4
X
M1
Ø D
M E7
N2
N1

SK...

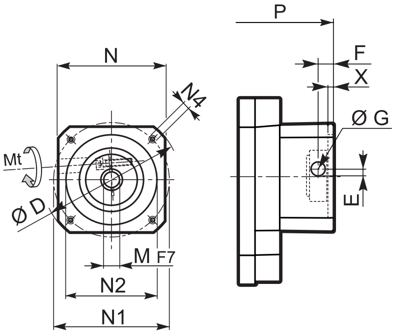

P
N
F
X
N4
Ø G
Mt
Ø D
E
M F7
N2
N1

SC...

		D	M	M1	M2	N	N1	N2	N4	X	P		Kg
											2/3x	4x	
A 50 2/3	**SK80B**	120	14	16.3	5	96	100	80	M6x12	4	474	—	61/61
A 50 2/3/4	**SK80C**	120	19	21.8	6	96	100	80	M6x12	4	474	545.5	61/61/63
A 50 2/3/4	**SK95A**	130	14	16.3	5	102	115	95	M8x12	4	474	545.5	61/61/63
A 50 2/3/4	**SK95B**	130	19	21.8	6	102	115	95	M8x12	4	474	545.5	61/61/63
A 50 2/3/4	**SK95C**	130	24	27.3	8	102	115	95	M8x12	4	474	545.5	61/61/63
A 50 2/3/4	**SK110A**	150	19	21.8	6	120	130	110	M8x12	5	474	545.5	61/61/65
A 50 2/3/4	**SK110B**	150	24	27.3	8	120	130	110	M8x12	5	474	575	61/61/65
A 50 2/3/4	**SK130A**	188	24	27.3	8	142	165	130	M10x20	5	474	575	63/63/66
A 50 2/3	**SK130B**	189	32	35.3	10	160	165	130	M10x20	5	520.5	—	69/69
A 50 2/3	**SK180A**	240	32	35.3	10	192	215	180	M12x19	5	520.5	—	69/69
A 50 2/3	**SK180B**	240	38	41.3	10	192	215	180	M12x19	5	520.5	—	69/69

			Mt [Nm]	D	E	F	G	M	N	N1	N2	N4	X	P		Kg
														2/3x	3x	
A 50 2/3	**SC80B**	M6	15	120	15.5	14.5	17.75	14	96	100	80	M6x12	4	497.5	—	62/62
A 50 2/3/4	**SC80C**	M6	15	120	15.5	14.5	17.75	19	96	100	80	M6x12	4	497.5	569	62/62/64
A 50 2/3/4	**SC95A**	M6	15	130	16.5	15	17.75	14	102	115	95	M8x16	4	497.5	569	62/62/64
A 50 2/3/4	**SC95B**	M6	15	130	16.5	15	17.75	19	102	115	95	M8x16	4	497.5	569	62/62/64
A 50 2/3/4	**SC95C**	M6	15	130	16.5	15	17.75	24	102	115	95	M8x16	4	497.5	569	62/62/64
A 50 2/3/4	**SC110A**	M6	15	150	16.5	16	17.75	19	120	130	110	M8x16	5	497.5	569	63/63/66
A 50 2/3/4	**SC110B**	M6	15	150	16.5	16	17.75	24	120	130	110	M8x16	5	497.5	569	63/63/66
A 50 2/3/4	**SC130A**	M6	15	188	19	16	17.75	24	142	165	130	M10x20	5	497.5	569	64/64/67
A 50 2/3	**SC130B**	M8	36	189	20	17	17.75	32	160	165	130	M10x20	5	543.5	—	68/68
A 50 2/3	**SC180A**	M8	36	240	20	17.5	17.75	32	192	215	180	M12x24	5	547.5	—	68/68
A 50 2/3	**SC180B**	M8	36	240	20	17.5	17.75	38	192	215	180	M12x24	5	547.5	—	68/68

A 50...F...

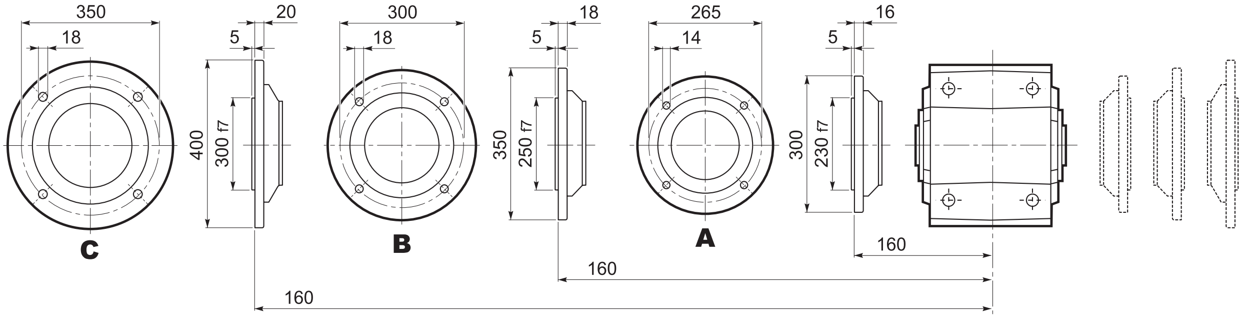

350
18
20
5
400
300 f7
C
300
18
18
5
350
250 f7
B
265
14
16
5
300
230 f7
A
160
160
160

A 50

A 50...UR

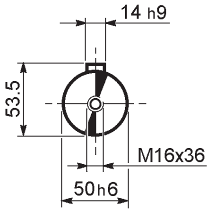
14 h9
53.5
M16x36
50 h6

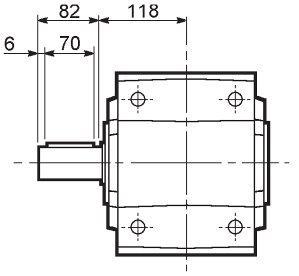

A 50...UD

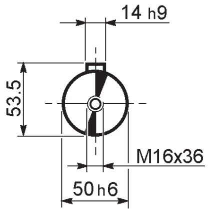
14 h9
53.5
M16x36
50 h6

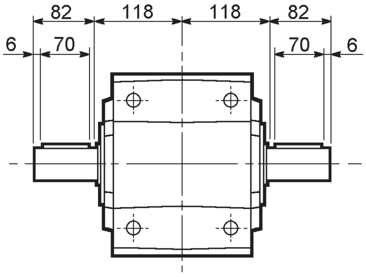
82
118
118
82
6
70
70
6

A 50...UH

H50
STANDARD

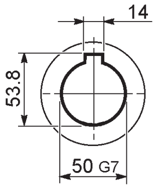

H55

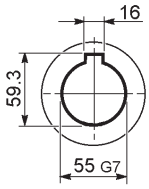

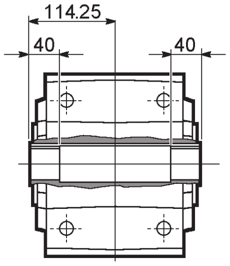

A 50...US

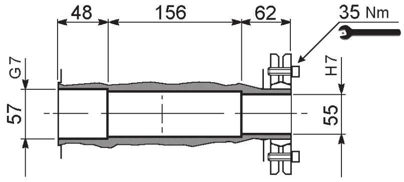
48
156
62
35 Nm
G7
H7
57
55

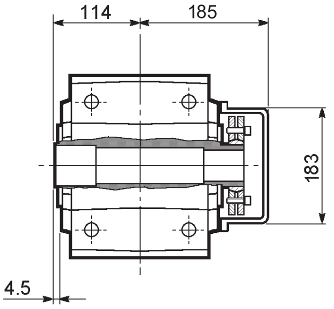
114
185
183
4.5

A 50...QF

	Ø
QF50	50
QF55	55

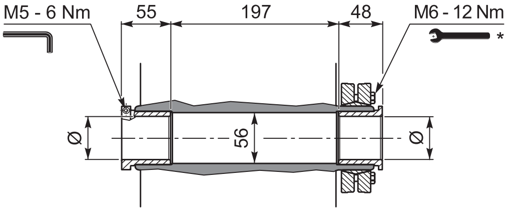
M5 - 6 Nm
55
197
48
M6 - 12 Nm
*
Ø
56
Ø

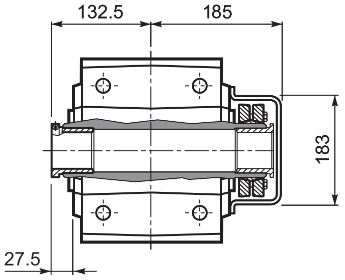
132.5
185
183
27.5

A 50...UV

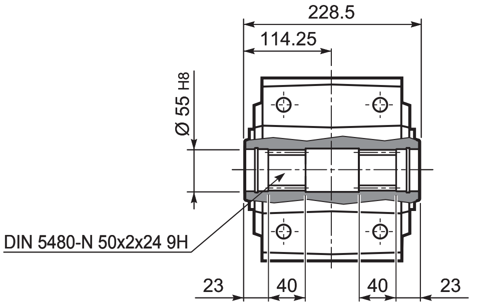
228.5
114.25
Ø 55 H8
DIN 5480-N 50x2x24 9H
23
40
40
23

* Befolgen Sie die MONTAGEANLEITUNG die dem Getriebe beiliegt.

A 55...M

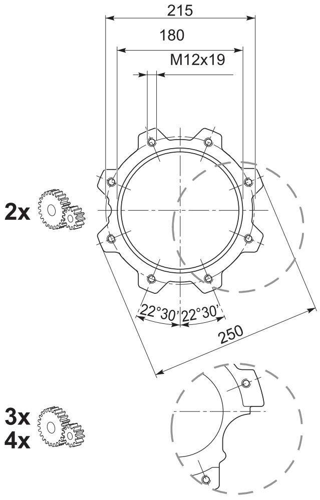
215
180
M12x19
2x
22°30'
22°30'
250
3x
4x

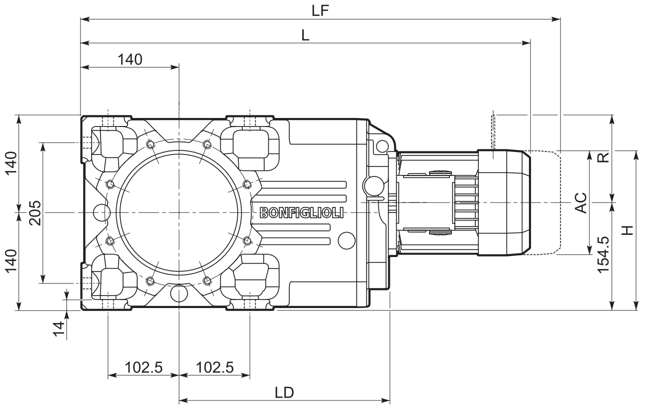
LF
L
140
140
205
140
14
BONFIGLIOLI
AC
R
H
154.5
102.5
102.5
LD

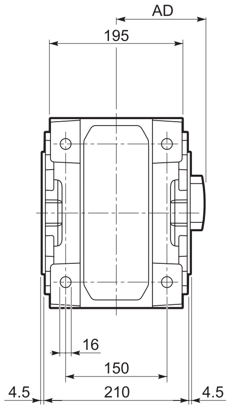
AD
195
16
150
4.5
210
4.5

								M...FD M...FA		M...FD		M...FA	
			AC	H	L	LD	AD	Kg	LF	Kg	R	AD	R	AD
A 55 3	**S1**	**M1**	138	198.5	627.5	—	108	81	688.5	84	103	135	124	108
A 55 2/3	**S2**	**M2S**	156	232	656.5	302.5	119	88	726.5	92	129	146	134	119
A 55 2/3	**S3**	**M3S**	195	251	699.5	317.5	142	93	795.5	99	160	158	160	142
A 55 2/3	**S3**	**M3L**	195	251	731.5	317.5	142	101	822.5	108	160	158	160	142
A 55 2/3	**S4**	**M4**	258	283	839.5	302.5	193	135	948.5	153	226	210	217	193
A 55 2/3	**S4**	**M4LC**	258	283	874.5	302.5	193	143	973.5	161	226	210	217	193
A 55 2/3	**S5**	**M5S**	310	309.5	926	—	245	163	1066	193	266	245	247	245
A 55 2/3	**S5**	**M5L**	310	309.5	970	—	245	179	1110	209	266	245	247	245
A 55 4	**S1**	**M1**	138	223	699	—	108	82	760	85	103	135	124	108
A 55 4	**S2**	**M2S**	156	232	728	—	119	86	798	90	129	146	134	119
A 55 4	**S3**	**M3S**	195	251.5	771	—	142	91	867	98	160	158	160	142
A 55 4	**S3**	**M3L**	195	251.5	803	—	142	98	894	105	160	158	160	142

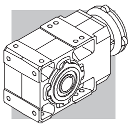

A 55...P(IEC)

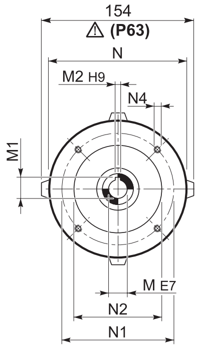

154
⚠ (P63)
N
M2 H9
N4
M1
M E7
N2
N1

INPUT

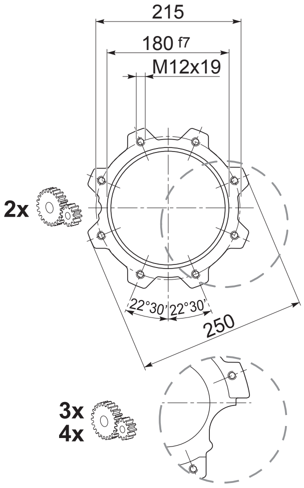

215
180 f7
M12x19
2x
22°30'
22°30'
250
3x
4x

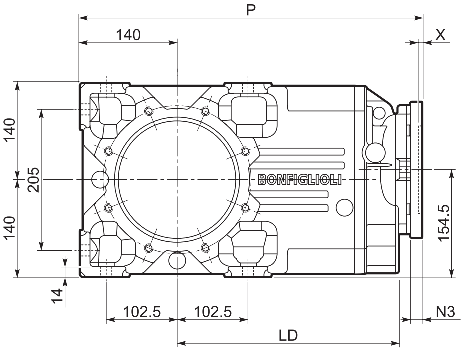

P
140
X
140
205
140
154.5
14
102.5
102.5
N3
LD
BONFIGLIOLI

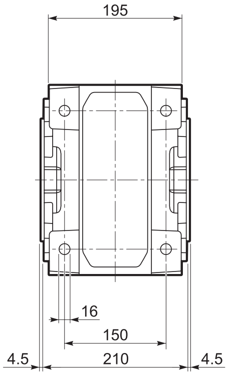

195
16
150
4.5
210
4.5

		LD	M	M1	M2	N	N1	N2	N3	N4	X	P	Kg
A 55 3	**P63**	302.5	11	12.8	4	140	115	95	—	M8x19	4	472.5	75
A 55 3	**P71**	302.5	14	16.3	5	160	130	110	—	M8x16	4.5	472.5	75
A 55 2/3	**P80**	317.5	19	21.8	6	200	165	130	—	M10x14.5	4	492	81
A 55 2/3	**P90**	317.5	24	27.3	8	200	165	130	—	M10x14.5	4	492	81
A 55 2/3	**P100**	302.5	28	31.3	8	250	215	180	—	M12x16	4.5	502	85
A 55 2/3	**P112**	302.5	28	31.3	8	250	215	180	—	M12x16	4.5	502	85
A 55 2/3	**P132**	302.5	38	41.3	10	300	265	230	16	14	5	538.5	93
A 55 2/3	**P160**	—	42	45.3	12	350	300	250	23	18	5.5	589	110
A 55 2/3	**P180**	—	48	51.8	14	350	300	250	23	18	5.5	589	110
A 55 4	**P63**	—	11	12.8	4	140	115	95	—	M8x19	4	544	77
A 55 4	**P71**	—	14	16.3	5	160	130	110	—	M8x16	4.5	544	77
A 55 4	**P80**	—	19	21.8	6	200	165	130	—	M10x14.5	4	563.5	78
A 55 4	**P90**	—	24	27.3	8	200	165	130	—	M10x14.5	4	563.5	78
A 55 4	**P100**	—	28	31.3	8	250	215	180	—	M12x16	4.5	573.5	82
A 55 4	**P112**	—	28	31.3	8	250	215	180	—	M12x16	4.5	573.5	82

A 55...HS

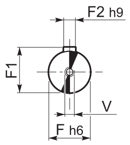

F2 h9
F1
V
F h6

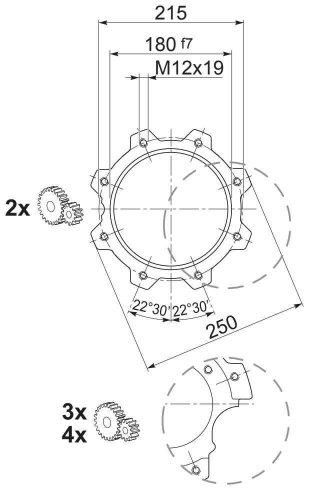

215
180 f7
M12x19
2x
22°30'
22°30'
250
3x
4x

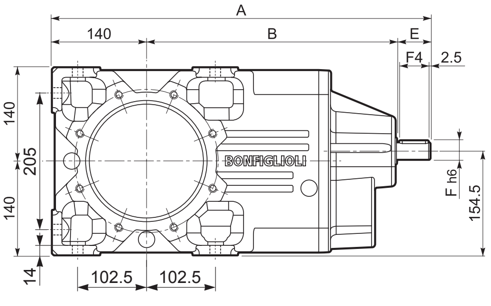

A
140
B
E
F4
2.5
140
205
140
F h6
154.5
14
102.5
102.5
BONFIGLIOLI

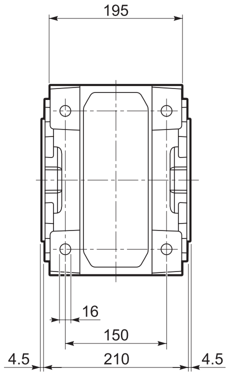

195
16
150
4.5
210
4.5

		A	B	E	F	F1	F2	F3	F4	V	Kg
A 55 2	**HS**	561.5	371.5	50	24	27	8	2.5	45	M8x19	96
A 55 3		561.5	371.5	50	24	27	8	2.5	45	M8x19	91
A 55 4		594	414	40	19	21.5	6	2.5	35	M6x16	92

A 55...SK / SC

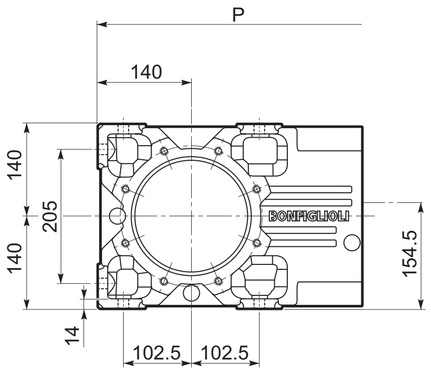
P
140
140
205
140
14
102.5
102.5
154.5
BONFIGLIOLI

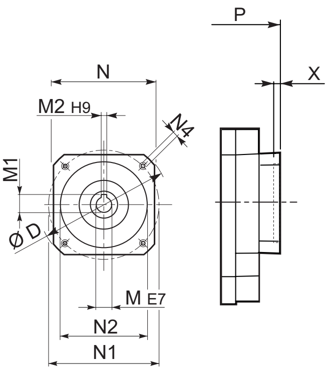
P
N
X
M2 H9
N4
M1
Ø D
M E7
N2
N1

SK...

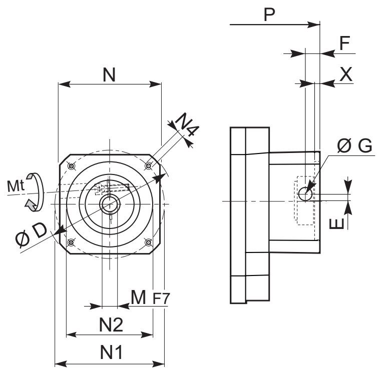
P
F
X
N
N4
Ø G
Mt
Ø D
E
M F7
N2
N1

SC...

		D	M	M1	M2	N	N1	N2	N4	X	P		Kg
											2/3x	4x	
A 55 3	SK80B	120	14	16.3	5	96	100	80	M6x12	4	492	—	81
A 55 2/3/4	SK80C	120	19	21.8	6	96	100	80	M6x12	4	492	563.5	81/81/77
A 55 3/4	SK95A	130	14	16.3	5	102	115	95	M8x12	4	492	563.5	81/81/77
A 55 2/3/4	SK95B	130	19	21.8	6	102	115	95	M8x12	4	492	563.5	81/81/77
A 55 2/3/4	SK95C	130	24	27.3	8	102	115	95	M8x12	4	492	563.5	81/81/77
A 55 2/3/4	SK110A	150	19	21.8	6	120	130	110	M8x12	5	492	593	81/81/78
A 55 2/3/4	SK110B	150	24	27.3	8	120	130	110	M8x12	5	492	593	81/81/78
A 55 2/3/4	SK130A	188	24	27.3	8	142	165	130	M10x20	5	492	593	83/83/79
A 55 2/3	SK130B	189	32	35.3	10	160	165	130	M10x20	5	538.5	—	90/90
A 55 2/3	SK180A	240	32	35.3	10	192	215	180	M12x19	5	538.5	—	90/90
A 55 2/3	SK180B	240	38	41.3	10	192	215	180	M12x19	5	538.5	—	90/90

			Mt [Nm]	D	E	F	G	M	N	N1	N2	N4	X	P		Kg
														2/3x	3x	
A 55 3	SC80B	M6	15	120	15.5	14.5	17.75	14	96	100	80	M6x12	4	515.5	—	82
A 55 2/3/4	SC80C	M6	15	120	15.5	14.5	17.75	19	96	100	80	M6x12	4	515.5	587	82/82/78
A 55 3/4	SC95A	M6	15	130	16.5	15	17.75	14	102	115	95	M8x16	4	515.5	587	82/82/78
A 55 2/3/4	SC95B	M6	15	130	16.5	15	17.75	19	102	115	95	M8x16	4	515.5	587	82/82/78
A 55 2/3/4	SC95C	M6	15	130	16.5	15	17.75	24	102	115	95	M8x16	4	515.5	587	82/82/78
A 55 2/3/4	SC110A	M6	15	150	16.5	16	17.75	19	120	130	110	M8x16	5	515.5	587	83/83/79
A 55 2/3/4	SC110B	M6	15	150	16.5	16	17.75	24	120	130	110	M8x16	5	515.5	587	83/83/79
A 55 2/3/4	SC130A	M6	15	188	19	16	17.75	24	142	165	130	M10x20	5	515.5	587	84/84/80
A 55 2/3	SC130B	M8	36	189	20	17	17.75	32	160	165	130	M10x20	5	561.5	—	93/93
A 55 2/3	SC180A	M8	36	240	20	17.5	17.75	32	192	215	180	M12x24	5	565.5	—	93/93
A 55 2/3	SC180B	M8	36	240	20	17.5	17.75	38	192	215	180	M12x24	5	565.5	—	93/93

A 55...F...

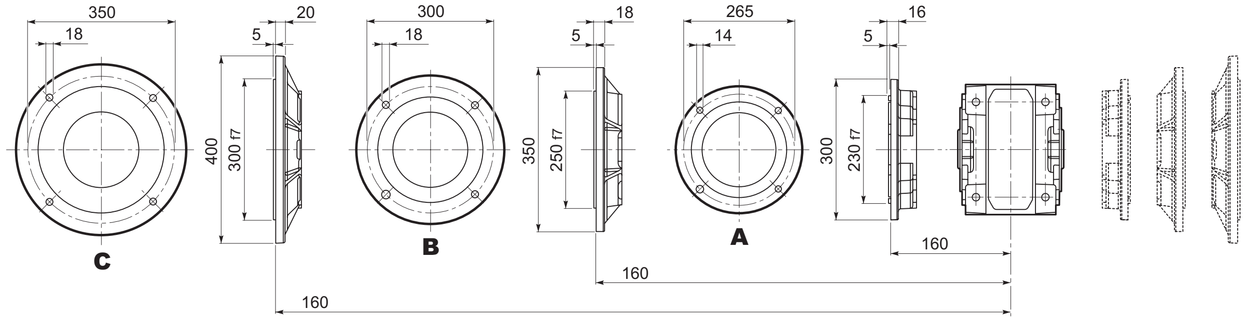
350
18
20
5
400
300 f7
C
300
18
18
5
350
250 f7
B
265
14
16
5
300
230 f7
A
160
160
160

A 55

A 55...UR

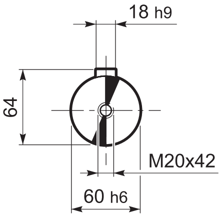
18 h9
64
M20x42
60 h6

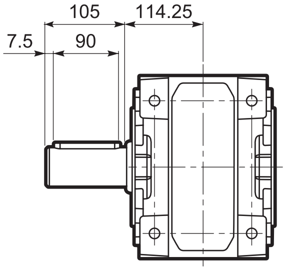
105
114.25
7.5
90

A 55...UD

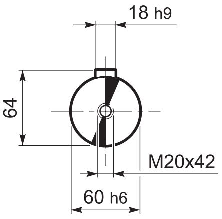
18 h9
64
M20x42
60 h6

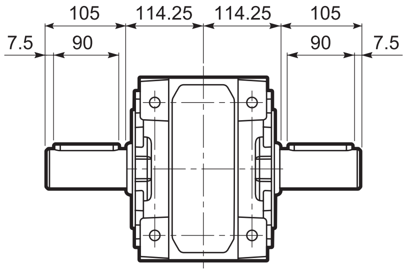
105
114.25
114.25
105
7.5
90
90
7.5

A 55...UH

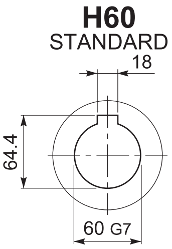
H60
STANDARD
18
64.4
60 G7

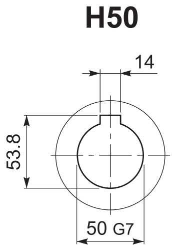
H50
14
53.8
50 G7

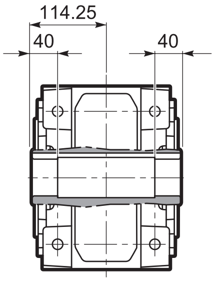

A 55...US

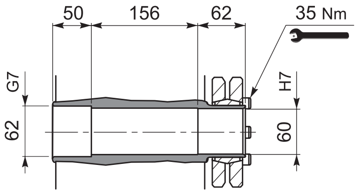
50
156
62
35 Nm
G7
62
H7
60

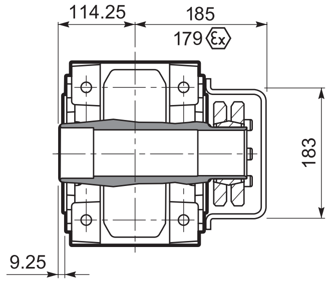
114.25
185
179 Ex
183
9.25

A 55...QF

	Ø
QF55	55
QF60	60

$M_{n2\ max}$ [Nm]	
A 55 QF55	1900

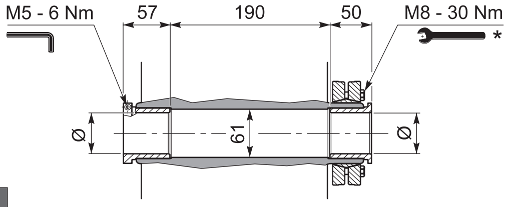
M5 - 6 Nm
57
190
50
M8 - 30 Nm
*
Ø
61
Ø

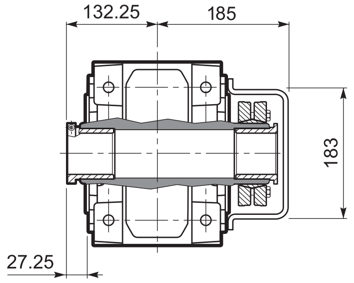
132.25
185
183
27.25

A 55...UV

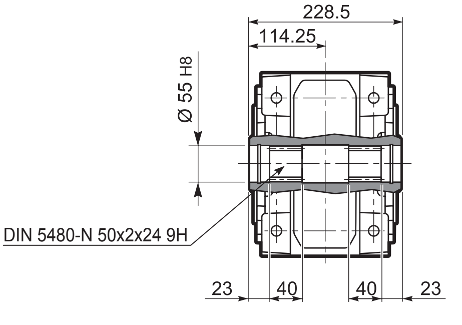
228.5
114.25
Ø 55 H8
DIN 5480-N 50x2x24 9H
23
40
40
23

* Befolgen Sie die MONTAGEANLEITUNG die dem Getriebe beiliegt.

A 60...M

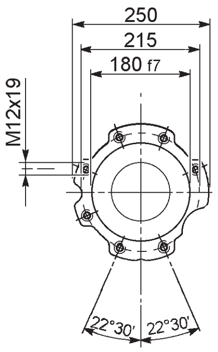
250
215
180 f7
M12x19
7
22°30'
22°30'

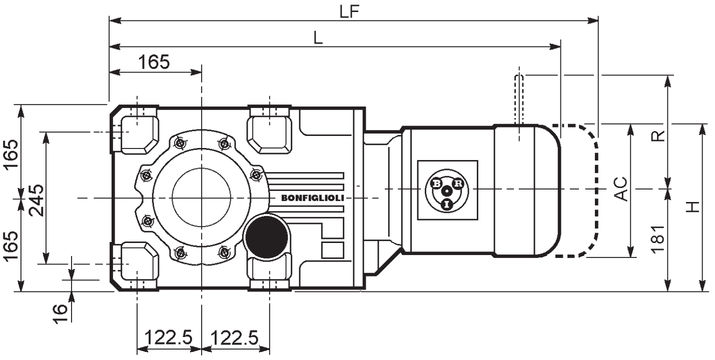
LF
L
165
165
245
165
16
122.5
122.5
BONFIGLIOLI
AC
R
H
181

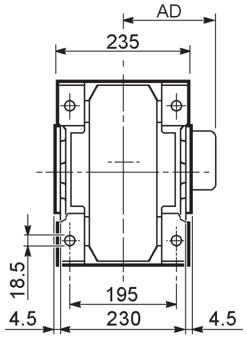
AD
235
18.5
195
230
4.5
4.5

								M...FD M...FA		M...FD		M...FA	
			AC	H	L	AD	Kg	LF	Kg	R	AD	R	AD
A 60 2/3	**S2**	**M2S**	156	256.5	700.5	119	98	770.5	102	129	146	134	119
A 60 2/3	**S3**	**M3S**	195	276	743.5	142	103	839.5	111	160	158	160	142
A 60 2/3	**S3**	**M3L**	195	276	775.5	142	111	866.5	118	160	158	160	142
A 60 2/3	**S4**	**M4**	258	307.5	883.5	193	145	992.5	163	226	210	217	193
A 60 2/3	**S4**	**M4LC**	258	307.5	918.5	193	153	1017.5	171	226	210	217	193
A 60 2/3	**S5**	**M5S**	310	333.5	970	245	173	1110	203	266	245	247	245
A 60 2/3	**S5**	**M5L**	310	333.5	1014	245	189	1154	219	266	245	247	245
A 60 4	**S1**	**M1**	138	247.5	742	108	100	803	103	103	135	124	108
A 60 4	**S2**	**M2S**	156	256.5	771	119	104	841	108	129	146	134	119
A 60 4	**S3**	**M3S**	195	276	814	142	109	910	117	160	158	160	142
A 60 4	**S3**	**M3L**	195	276	846	142	117	937	124	160	158	160	142

A 60...P(IEC)

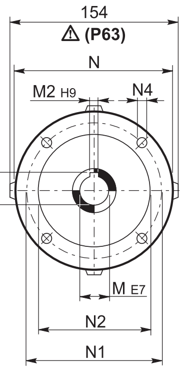
154
⚠ (P63)
N
M2 H9
N4
M1
M E7
N2
N1

INPUT

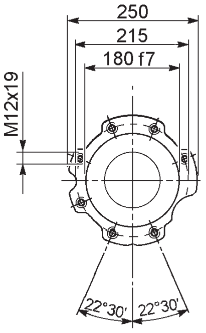
250
215
180 f7
M12x19
22°30'
22°30'

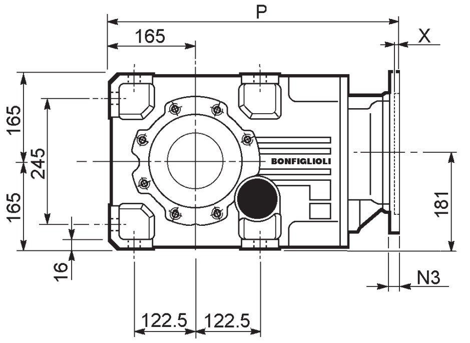
P
165
X
165
245
165
BONFIGLIOLI
181
16
N3
122.5
122.5

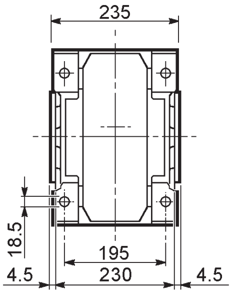
235
18.5
195
230
4.5
4.5

		M	M1	M2	N	N1	N2	N3	N4	X	P	Kg
A 60 3	**P63**	11	12.8	4	140	115	95	—	M8x19	4	516.5	90
A 60 3	**P71**	14	16.3	5	160	130	110	—	M8x16	4.5	516.5	90
A 60 2/3	**P80**	19	21.8	6	200	165	130	—	M10x14.5	4	536	91
A 60 2/3	**P90**	24	27.3	8	200	165	130	—	M10x14.5	4	536	91
A 60 2/3	**P100**	28	31.3	8	250	215	180	—	M12x16	4.5	546	95
A 60 2/3	**P112**	28	31.3	8	250	215	180	—	M12x16	4.5	546	95
A 60 2/3	**P132**	38	41.3	10	300	265	230	16	14	5	582.5	104
A 60 2/3	**P160**	42	45.3	12	350	300	250	23	18	5.5	633	121
A 60 2/3	**P180**	48	51.8	14	350	300	250	23	18	5.5	633	121
A 60 4	**P63**	11	12.8	4	140	115	95	—	M8x19	4	587	88
A 60 4	**P71**	14	16.3	5	160	130	110	—	M8x16	4.5	587	88
A 60 4	**P80**	19	21.8	6	200	165	130	—	M10x14.5	4	606.5	90
A 60 4	**P90**	24	27.3	8	200	165	130	—	M10x14.5	4	606.5	90
A 60 4	**P100**	28	31.3	8	250	215	180	—	M12x16	4.5	616.5	94
A 60 4	**P112**	28	31.3	8	250	215	180	—	M12x16	4.5	616.5	94

A 60...HS

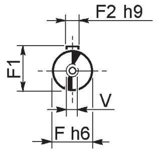
F2 h9
F1
V
F h6

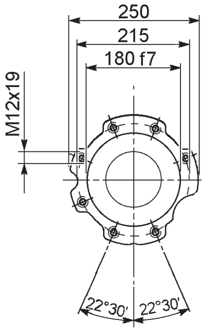
250
215
180 f7
M12x19
22°30'
22°30'

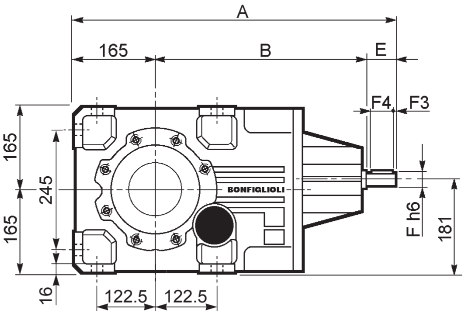
A
165
B
E
F4
F3
165
245
165
BONFIGLIOLI
F h6
181
16
122.5
122.5

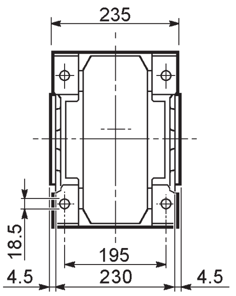
235
18.5
195
230
4.5
4.5

		A	B	E	F	F1	F2	F3	F4	V	Kg
A 60 2	**HS**	633	408	60	28	31	8	5.0	50	M10x22	106
A 60 3		633	408	60	28	31	8	5.0	50	M10x22	106
A 60 4		676	461	50	24	27	8	2.5	45	M8x19	112

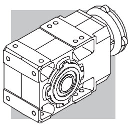

A 60...SK / SC

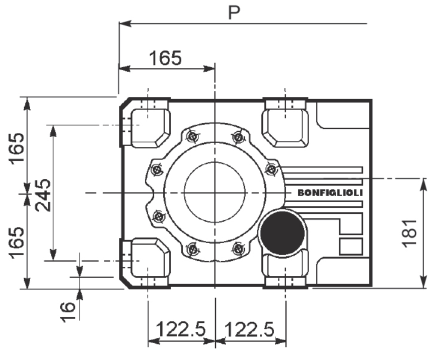
P
165
165
245
165
16
122.5
122.5
181
BONFIGLIOLI

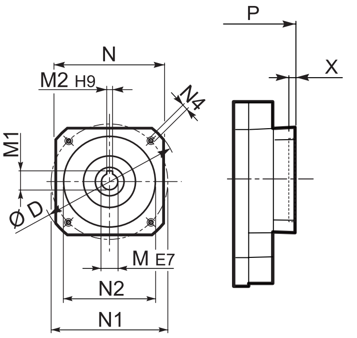
P
N
X
M2 H9
N4
M1
Ø D
M E7
N2
N1

SK...

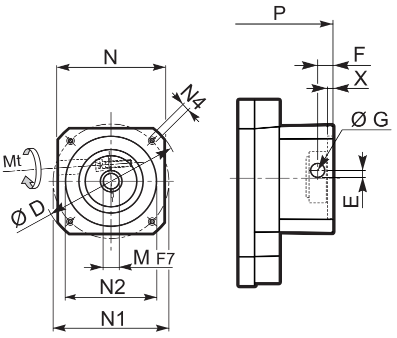
P
N
F
X
N4
Ø G
Mt
Ø D
E
M F7
N2
N1

SC...

		D	M	M1	M2	N	N1	N2	N4	X	P		Kg
											2/3x	4x	
A 60 4	**SK80B**	120	14	16.3	5	96	100	80	M6x12	4	—	606.5	89
A 60 2/3/4	**SK80C**	120	19	21.8	6	96	100	80	M6x12	4	536	606.5	93/93/92
A 60 2/3/4	**SK95A**	130	14	16.3	5	102	115	95	M8x12	4	536	606.5	93/93/92
A 60 2/3/4	**SK95B**	130	19	21.8	6	102	115	95	M8x12	4	536	606.5	93/93/92
A 60 2/3/4	**SK95C**	130	24	27.3	8	102	115	95	M8x12	4	536	606.5	93/93/92
A 60 2/3/4	**SK110A**	140	19	21.8	6	120	130	110	M8x12	5	536	606.5	93/93/92
A 60 2/3/4	**SK110B**	140	24	27.3	8	120	130	110	M8x12	5	536	606.5	93/93/92
A 60 2/3/4	**SK130A**	188	24	27.3	8	142	165	130	M10x20	5	536	606.5	97/97/103
A 60 2/3	**SK130B**	189	32	35.3	10	160	165	130	M10x20	5	582.5	—	102/102
A 60 2/3	**SK180A**	240	32	35.3	10	192	215	180	M12x19	5	582.5	—	102/102
A 60 2/3	**SK180B**	240	38	41.3	10	192	215	180	M12x19	5	582.5	—	102/102

			Mt [Nm]	D	E	F	G	M	N	N1	N2	N4	X	P		Kg
														2/3x	3x	
A 60 4	**SC80B**	M6	15	120	15.5	14.5	17.75	14	96	100	80	M6x12	4	—	630	90
A 60 2/3/4	**SC80C**	M6	15	120	15.5	14.5	17.75	19	96	100	80	M6x12	4	559.5	630	94/94/93
A 60 2/3/4	**SC95A**	M6	15	130	16.5	15	17.75	14	102	115	95	M8x16	4	559.5	630	94/94/93
A 60 2/3/4	**SC95B**	M6	15	130	16.5	15	17.75	19	102	115	95	M8x16	4	559.5	630	94/94/93
A 60 2/3/4	**SC95C**	M6	15	130	16.5	15	17.75	24	102	115	95	M8x16	4	559.5	630	94/94/93
A 60 2/3/4	**SC110A**	M6	15	140	16.5	16	17.75	19	120	130	110	M8x16	5	559.5	630	95/95/93
A 60 2/3/4	**SC110B**	M6	15	140	16.5	16	17.75	24	120	130	110	M8x16	5	559.5	630	95/95/93
A 60 2/3/4	**SC130A**	M6	15	188	19	16	17.75	24	142	165	130	M10x20	5	559.5	630	96/96/104
A 60 2/3	**SC130B**	M8	36	189	20	17	17.75	32	160	165	130	M10x20	5	605.5	—	105/105
A 60 2/3	**SC180A**	M8	36	240	20	17.5	17.75	32	192	215	180	M12x24	5	609.5	—	105/105
A 60 2/3	**SC180B**	M8	36	240	20	17.5	17.75	38	192	215	180	M12x24	5	609.5	—	105/105

A 60...F...

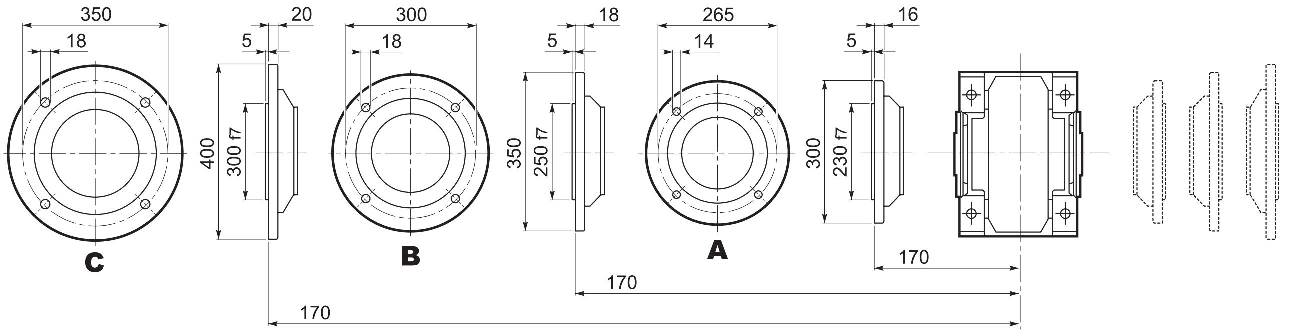
350
18
C
5
20
400
300 f7
300
18
B
5
18
350
250 f7
265
14
A
5
16
300
230 f7
170
170
170

A 60

A 60...UR

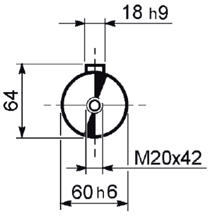
18 h9
64
M20x42
60 h6

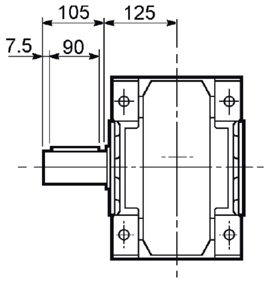
105
125
7.5
90

A 60...UD

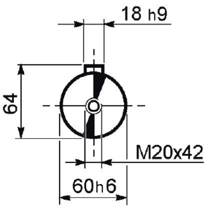
18 h9
64
M20x42
60h6

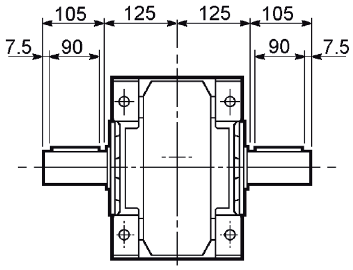
105
125
125
105
7.5
90
90
7.5

A 60...UH

H60
STANDARD

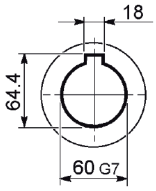

H70

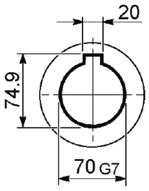

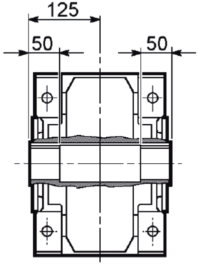

A 60...US

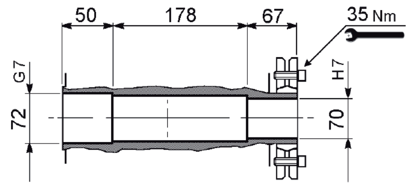
50
178
67
35 Nm
G7
72
H7
70

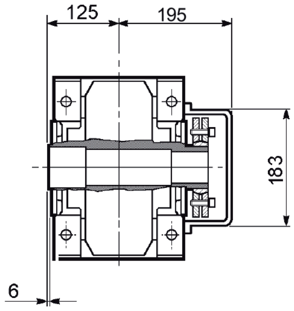
125
195
183
6

A 60...QF

	Ø
QF60	60
QF65	65
QF70	70

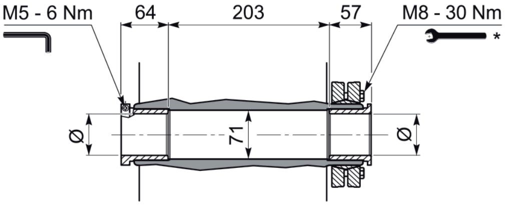
M5 - 6 Nm
64
203
57
M8 - 30 Nm
*
Ø
71
Ø

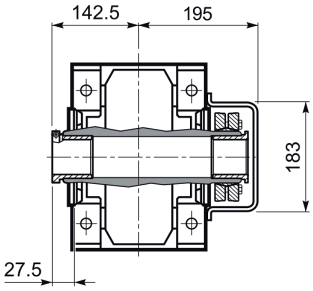
142.5
195
183
27.5

A 60...UV

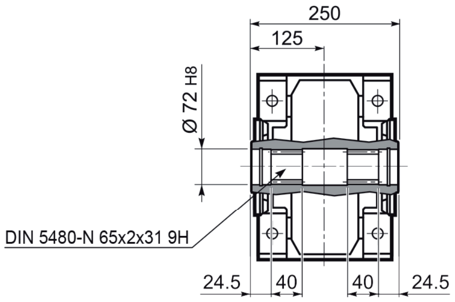
250
125
Ø 72 H8
DIN 5480-N 65x2x31 9H
24.5
40
40
24.5

* Befolgen Sie die MONTAGEANLEITUNG die dem Getriebe beiliegt.

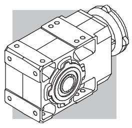

A 70...M

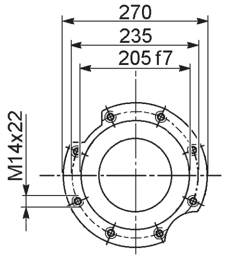

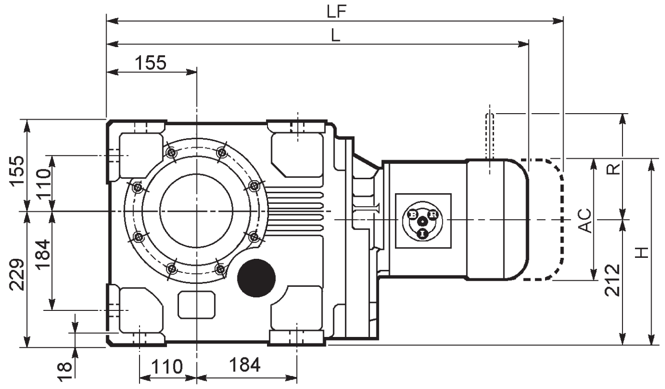

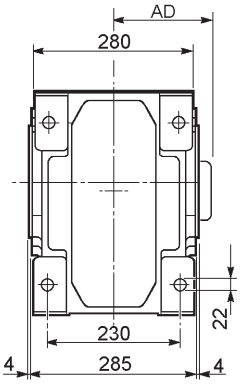

								M...FD M...FA		M...FD		M...FA	
			AC	H	L	AD	Kg	LF	Kg	R	AD	R	AD
A 70 3	**S2**	**M2S**	156	290	688.5	119	152	758.5	156	129	146	134	119
A 70 3	**S3**	**M3S**	195	309.5	731.5	142	157	827.5	164	160	158	160	142
A 70 3	**S3**	**M3L**	195	309.5	763.5	142	164	854.5	171	160	158	160	142
A 70 3	**S4**	**M4**	258	341	872.5	193	198	981.5	216	226	210	217	193
A 70 3	**S4**	**M4LC**	258	341	907.5	193	206	1006.5	224	226	210	217	193
A 70 3	**S5**	**M5S**	310	367	958	245	226	1098	256	266	245	247	245
A 70 3	**S5**	**M5L**	310	367	1002	245	242	1142	272	266	245	247	245
A 70 4	**S1**	**M1**	138	281	710.5	108	152	771.5	155	103	135	124	108
A 70 4	**S2**	**M2S**	156	290	739.5	119	156	809.5	160	129	146	134	119
A 70 4	**S3**	**M3S**	195	309.5	782.5	142	161	878.5	168	160	158	160	142
A 70 4	**S3**	**M3L**	195	309.5	814.5	142	168	905.5	175	160	158	160	142
A 70 4	**S4**	**M4**	258	341	922.5	193	202	1031.5	220	226	210	217	193
A 70 4	**S4**	**M4LC**	258	341	957.5	193	210	1056.5	228	226	210	217	193

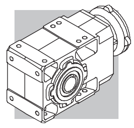

A 70...P (IEC)

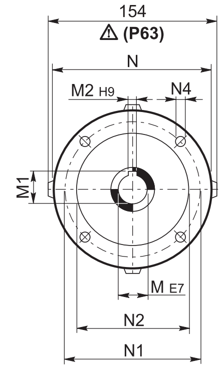
154
⚠ (P63)
N
M2 H9
N4
M1
M E7
N2
N1

INPUT

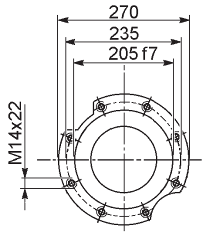
270
235
205 f7
M14x22

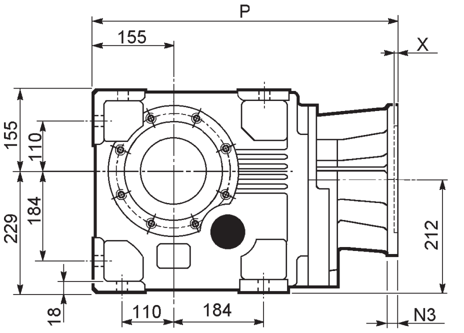
P
155
X
155
110
229
184
212
18
110
184
N3

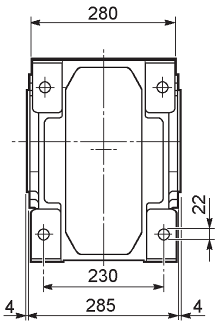
280
22
230
4
285
4

		M	M1	M2	N	N1	N2	N3	N4	X	P	Kg
A 70 3	**P80**	19	21.8	6	200	165	130	—	M10x14.5	4	524	144
A 70 3	**P90**	24	27.3	8	200	165	130	—	M10x14.5	4	524	144
A 70 3	**P100**	28	31.3	8	250	215	180	—	M12x16	4.5	534	146
A 70 3	**P112**	28	31.3	8	250	215	180	—	M12x16	4.5	534	146
A 70 3	**P132**	38	41.3	10	300	265	230	16	14	5	570.5	154
A 70 3	**P160**	42	45.3	12	350	300	250	23	18	6	626	169
A 70 3	**P180**	48	51.8	14	350	300	250	23	18	6	626	169
A 70 3	**P200**	55	59.3	16	400	350	300	—	M16x25	7	651	179
A 70 4	**P63**	11	12.8	4	140	115	95	—	M8x19	4	555.5	146
A 70 4	**P71**	14	16.3	5	160	130	110	—	M8x16	4.5	555.5	146
A 70 4	**P80**	19	21.8	6	200	165	130	—	M10x14.5	4	575	147
A 70 4	**P90**	24	27.3	8	200	165	130	—	M10x14.5	4	575	147
A 70 4	**P100**	28	31.3	8	250	215	180	—	M12x16	4.5	585	148
A 70 4	**P112**	28	31.3	8	250	215	180	—	M12x16	4.5	585	148
A 70 4	**P132**	38	41.3	10	300	265	230	16	14	5	618.5	157

A 70...HS

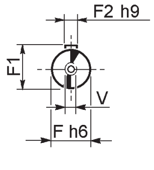
F2 h9
F1
V
F h6

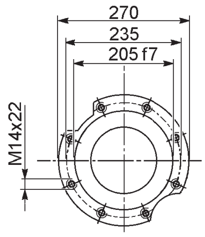
270
235
205 f7
M14x22

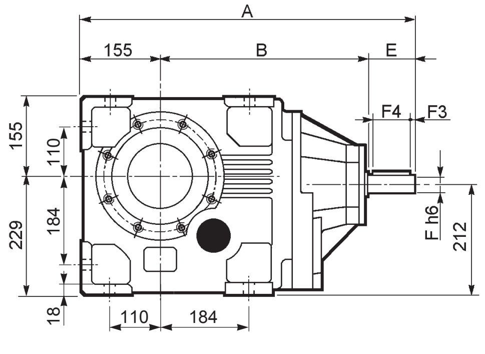
A
155
B
E
F4
F3
155
110
229
184
F h6
212
18
110
184

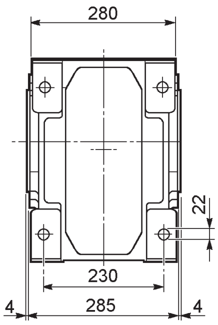
280
22
230
4
285
4

		A	B	E	F	F1	F2	F3	F4	V	Kg
A 70 3	**HS**	708.5	443.5	110	42	45	12	10	90	M12x28	165
A 70 4		644.5	439.5	50	24	27	8	2.5	45	M8x19	149

A 70

A 70...UR

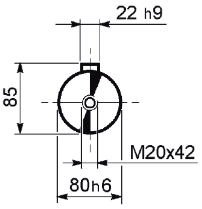
22 h9
85
M20x42
80h6

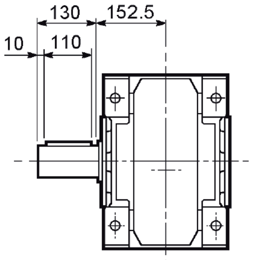
130
152.5
10
110

A 70...UD

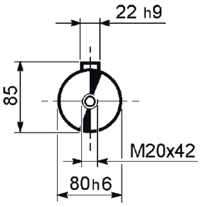
22 h9
85
M20x42
80h6

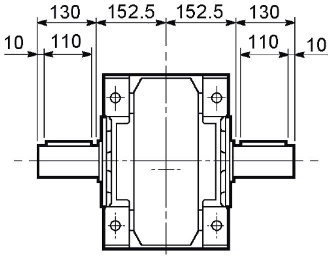
130
152.5
152.5
130
10
110
110
10

A 70...UH

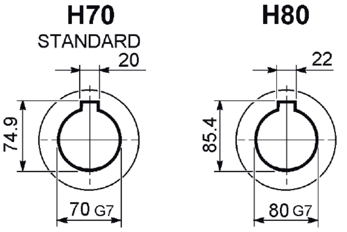
H70
STANDARD
20
74.9
70 G7
H80
22
85.4
80 G7

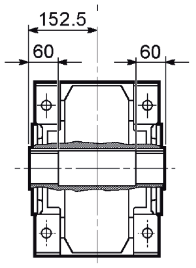

A 70...US

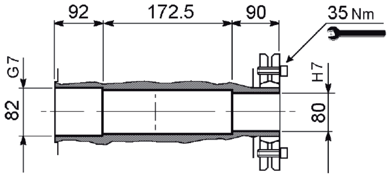
92
172.5
90
35 Nm
G7
82
H7
80

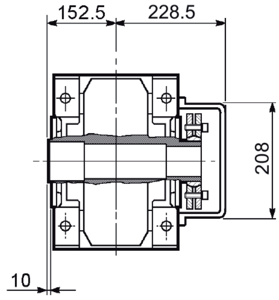
152.5
228.5
208
10

A 70...F...

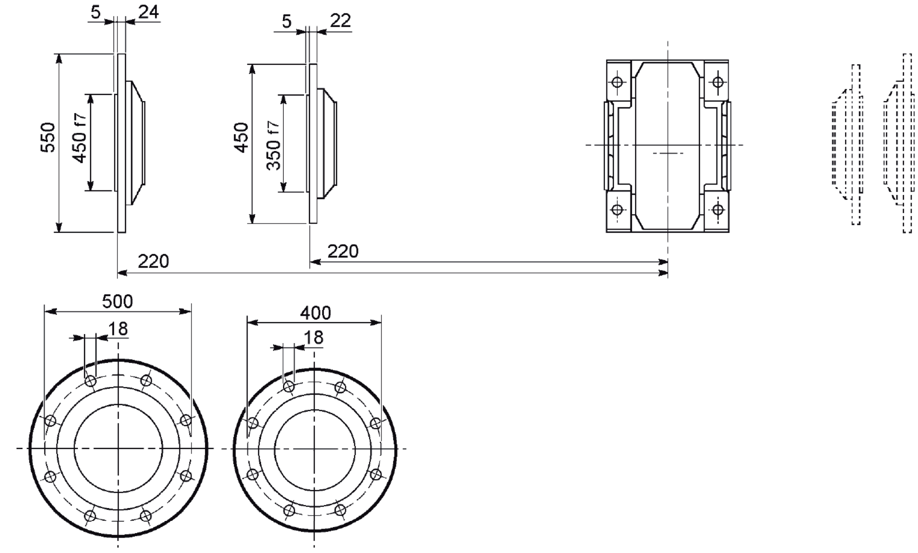
5
24
550
450 f7
5
22
450
350 f7
220
220
500
18
400
18

B **A**

A 80...M

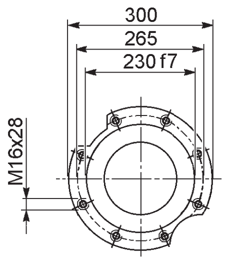

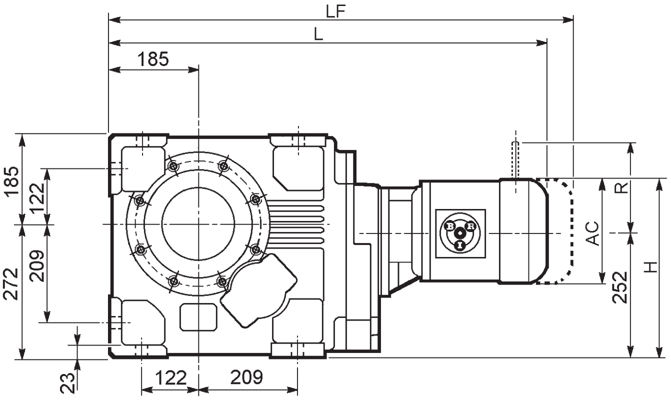

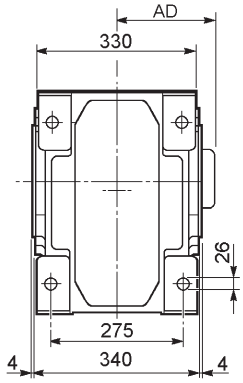

								M...FD M...FA		M...FD		M...FA	
			AC	H	L	AD	Kg	LF	Kg	R	AD	R	AD
A 80 3	**S3**	**M3S**	195	349.5	809.5	142	256	905.5	264	160	158	160	142
A 80 3	**S3**	**M3L**	195	349.5	841.5	142	264	932.5	271	160	158	160	142
A 80 3	**S4**	**M4**	258	381	949.5	193	298	1058.5	316	226	210	217	193
A 80 3	**S4**	**M4LC**	258	381	984.5	193	306	1083.5	324	226	210	217	193
A 80 3	**S5**	**M5S**	310	407	1036	245	326	1176	356	266	245	247	245
A 80 3	**S5**	**M5L**	310	407	1080	245	342	1220	372	266	245	247	245
A 80 4	**S1**	**M1**	138	321	800.5	108	246	861.5	249	103	135	124	108
A 80 4	**S2**	**M2S**	156	330	829.5	119	250	899.5	254	129	146	134	119
A 80 4	**S3**	**M3S**	195	349.5	872.5	142	255	968.5	262	160	158	160	142
A 80 4	**S3**	**M3L**	195	349.5	904.5	142	262	995.5	269	160	158	160	142
A 80 4	**S4**	**M4**	258	381	1012.5	193	296	1121.5	314	226	210	217	193
A 80 4	**S4**	**M4LC**	258	381	1047.5	193	304	1146.5	322	226	210	217	193

A 80...P(IEC)

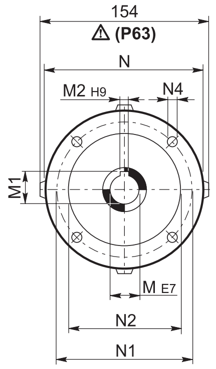
154
⚠ (P63)
N
M2 H9
N4
M1
M E7
N2
N1

INPUT

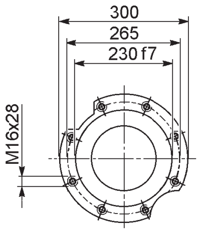
300
265
230 f7
M16x28

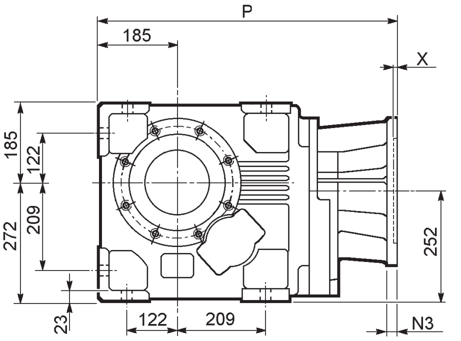
P
185
X
185
122
272
209
252
23
122
209
N3

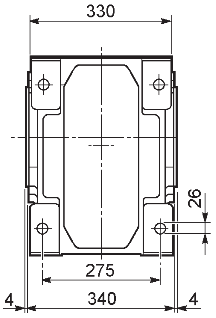
330
26
275
4
340
4

		M	M1	M2	N	N1	N2	N3	N4	X	P	Kg
A 80 3	**P80**	19	21.8	6	200	165	130	—	M10x14.5	4	602	243
A 80 3	**P90**	24	27.3	8	200	165	130	—	M10x14.5	4	602	243
A 80 3	**P100**	28	31.3	8	250	215	180	—	M12x16	4.5	612	245
A 80 3	**P112**	28	31.3	8	250	215	180	—	M12x16	4.5	612	245
A 80 3	**P132**	38	41.3	10	300	265	230	16	14	5	648.5	253
A 80 3	**P160**	42	45.3	12	350	300	250	23	18	6	704	268
A 80 3	**P180**	48	51.8	14	350	300	250	23	18	6	704	268
A 80 3	**P200**	55	59.3	16	400	350	300	—	M16x25	7	729	279
A 80 3	**P225**	60	64.4	18	450	400	350	25	18	6	774.5	298
A 80 4	**P63**	11	12.8	4	140	115	95	—	M8x19	4	645.5	248
A 80 4	**P71**	14	16.3	5	160	130	110	—	M8x16	4.5	645.5	248
A 80 4	**P80**	19	21.8	6	200	165	130	—	M10x14.5	4	665	249
A 80 4	**P90**	24	27.3	8	200	165	130	—	M10x14.5	4	665	249
A 80 4	**P100**	28	31.3	8	250	215	180	—	M12x16	4.5	675	250
A 80 4	**P112**	28	31.3	8	250	215	180	—	M12x16	4.5	675	250
A 80 4	**P132**	38	41.3	10	300	265	230	16	M12x16	5	711.5	259

A 80...HS

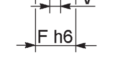
F2 h9
F1
V
F h6

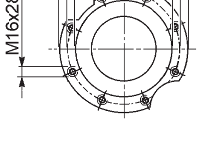
300
265
230 f7
M16x28

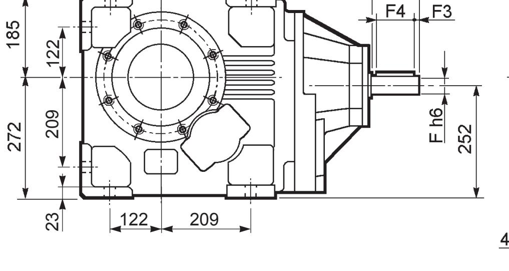
A
185
B
E
F4
F3
185
122
272
209
F h6
252
23
122
209

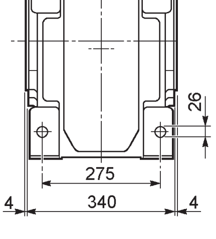
330
26
275
4
340
4

		A	B	E	F	F1	F2	F3	F4	V	Kg
A 80 3	**HS**	786.5	491.5	110	42	45	12	10	90	M12x28	265
A 80 4		735	500	50	24	27	8	2.5	45	M8x19	250

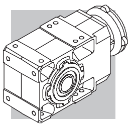

A 80

A 80...UR

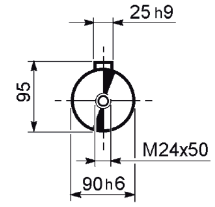
25 h9
95
M24x50
90 h6

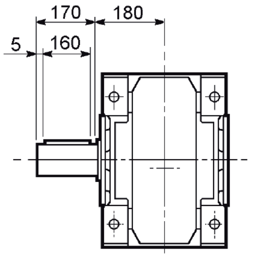
170
180
5
160

A 80...UD

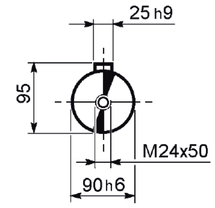
25 h9
95
M24x50
90 h6

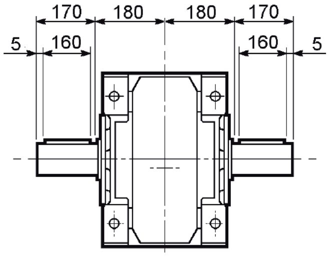
170
180
180
170
5
160
160
5

A 80...UH

H80
STANDARD

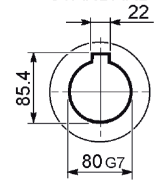

H90

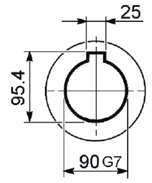

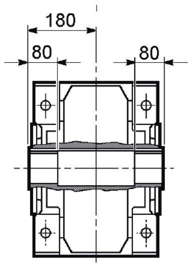

A 80...US

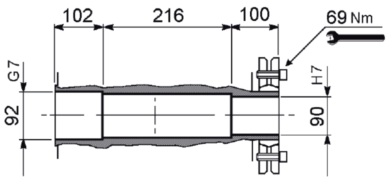
102
216
100
69 Nm
G7
92
H7
90

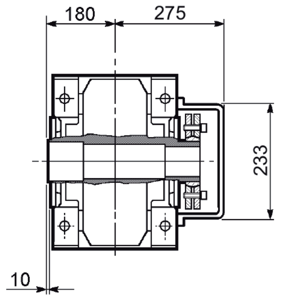
180
275
233
10

A 80...F...

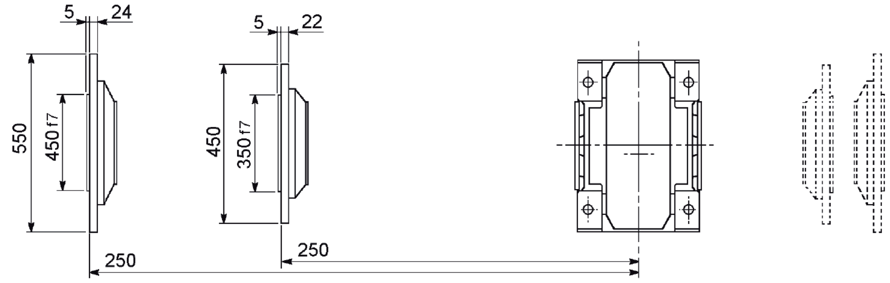
5
24
550
450 f7
5
22
450
350 f7
250
250

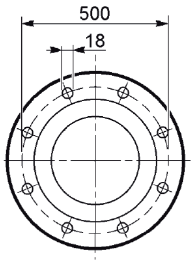

B

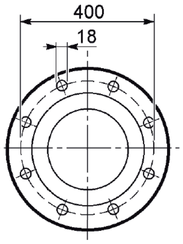

A

A 90...M

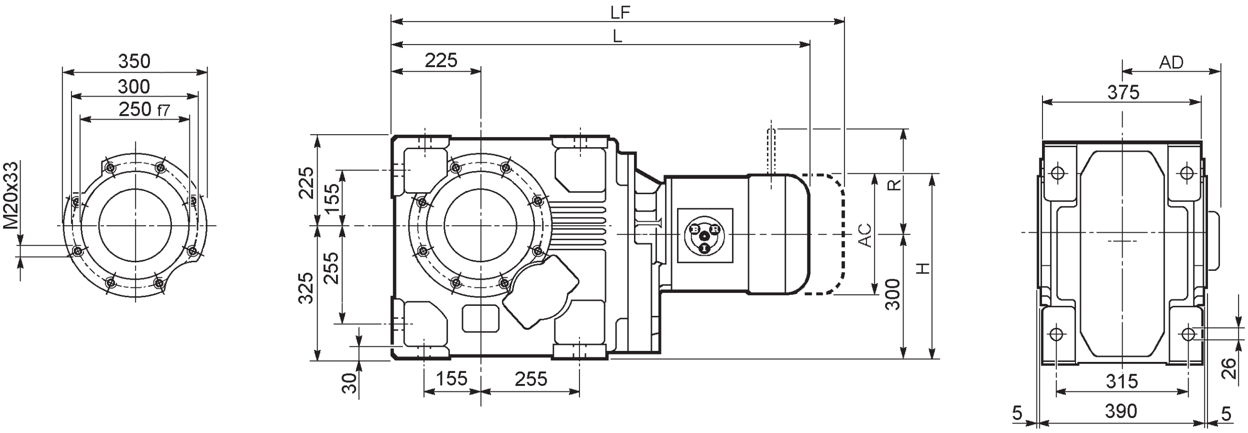

								M...FD M...FA		M...FD		M...FA	
			AC	H	L	AD	Kg	LF	Kg	R	AD	R	AD
A 90 3	**S3**	**M3S**	195	397.5	930.5	142	413	1026.5	420	160	158	160	142
A 90 3	**S3**	**M3L**	195	397.5	962.5	142	420	1053.5	427	160	158	160	142
A 90 3	**S4**	**M4**	258	429	1070.5	193	454	1179.5	472	226	210	217	193
A 90 3	**S4**	**M4LC**	258	429	1105.5	193	462	1204.5	480	226	210	217	193
A 90 3	**S5**	**M5S**	310	455	1157	245	482	1297	512	266	245	247	245
A 90 3	**S5**	**M5L**	310	455	1201	245	498	1341	528	266	245	247	245
A 90 4	**S1**	**M1**	138	369	941.5	108	412	1002.5	249	103	135	124	108
A 90 4	**S2**	**M2S**	156	378	970.5	119	422	1040.5	426	129	146	134	119
A 90 4	**S3**	**M3S**	195	397.5	1013.5	142	427	1109.5	434	160	158	160	142
A 90 4	**S3**	**M3L**	195	397.5	1045.5	142	434	1136.5	441	160	158	160	142
A 90 4	**S4**	**M4**	258	429	1153.5	193	468	1262.5	486	226	210	217	193
A 90 4	**S4**	**M4LC**	258	429	1188.5	193	476	1287.5	494	226	210	217	193

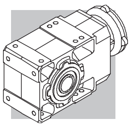

A 90...P (IEC)

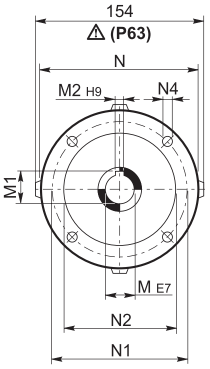
154
⚠ (P63)
N
M2 H9
N4
M1
M E7
N2
N1

INPUT

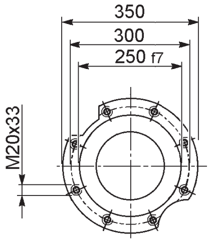
350
300
250 f7
M20x33

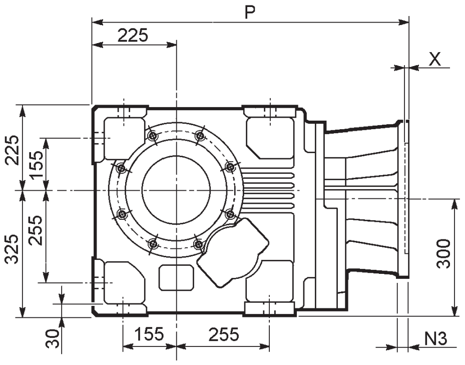
P
225
X
225
155
325
255
300
30
155
255
N3

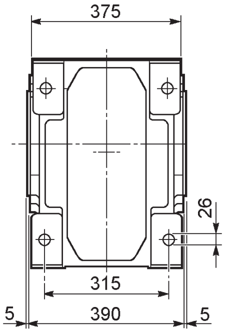
375
26
315
5
390
5

		M	M1	M2	N	N1	N2	N3	N4	X	P	Kg
A 90 3	**P80**	19	21.8	6	200	165	130	—	M10x14.5	4	723	400
A 90 3	**P90**	24	27.3	8	200	165	130	—	M10x14.5	4	723	400
A 90 3	**P100**	28	31.3	8	250	215	180	—	M12x16	4.5	733	401
A 90 3	**P112**	28	31.3	8	250	215	180	—	M12x16	4.5	733	401
A 90 3	**P132**	38	41.3	10	300	265	230	16	14	5	769.5	409
A 90 3	**P160**	42	45.3	12	350	300	250	23	18	6	825	428
A 90 3	**P180**	48	51.8	14	350	300	250	23	18	6	825	429
A 90 3	**P200**	55	59.3	16	400	350	300	—	M16x25	7	850	436
A 90 3	**P225**	60	64.4	18	450	400	350	30	18	6	895.5	472
A 90 3	**P250**	65	69.4	18	550	500	450	30	18	6	925.5	475
A 90 4	**P63**	11	12.8	4	140	115	95	—	M8x19	4	786.5	411
A 90 4	**P71**	14	16.3	5	160	130	110	—	M8x16	4.5	786.5	412
A 90 4	**P80**	19	21.8	6	200	165	130	—	M10x14.5	4	806	413
A 90 4	**P90**	24	27.3	8	200	165	130	—	M10x14.5	4	806	413
A 90 4	**P100**	28	31.3	8	250	215	180	—	M12x16	4.5	816	415
A 90 4	**P112**	28	31.3	8	250	215	180	—	M12x16	4.5	816	415
A 90 4	**P132**	38	41.3	10	300	265	230	16	14	5	852.5	423
A 90 4	**P160**	42	45.3	12	350	300	250	23	18	5.5	903	434
A 90 4	**P180**	48	51.8	14	350	300	250	23	18	5.5	903	434

A 90...HS

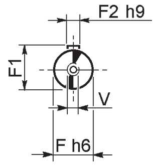
F2 h9
F1
V
F h6

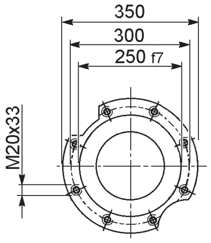
350
300
250 f7
M20x33

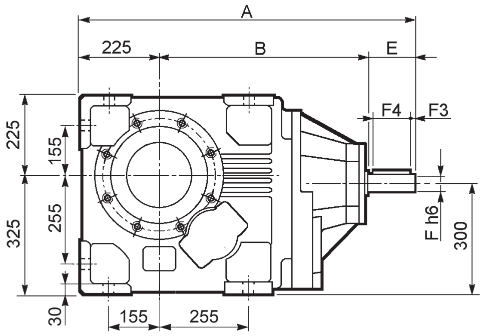
A
225
B
E
F4
F3
225
155
325
255
F h6
300
30
155
255

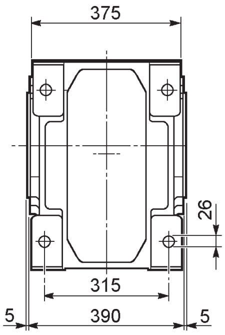
375
26
315
5
390
5

		A	B	E	F	F1	F2	F3	F4	V	Kg
A 90 3	**HS**	1009	644	140	60	64	18	10	120	M16x36	465
A 90 4		875.5	600.5	50	24	27	8	2.5	45	M8x19	415

A 90

A 90...UR

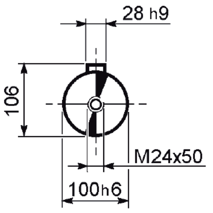
28 h9
106
M24x50
100h6

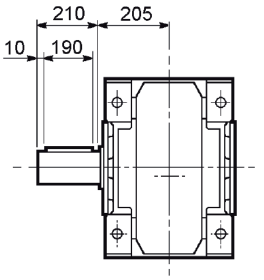
210
205
10
190

A 90...UD

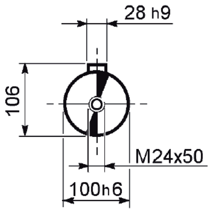
28 h9
106
M24x50
100h6

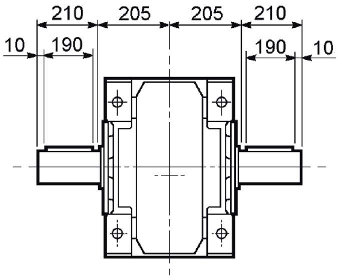
210
205
205
210
10
190
190
10

A 90...UH

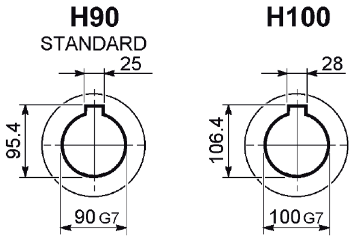
H90
STANDARD
25
95.4
90 G7
H100
28
106.4
100 G7

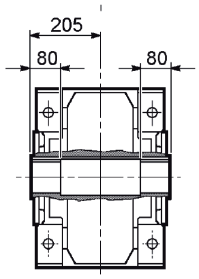

A 90...US

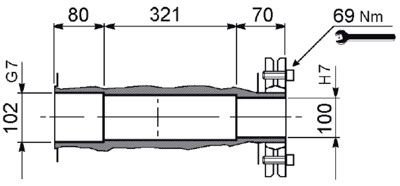
80
321
70
69 Nm
G7
102
H7
100

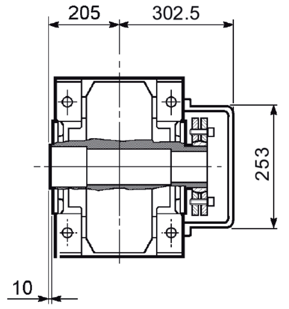
205
302.5
253
10

A 90...F...

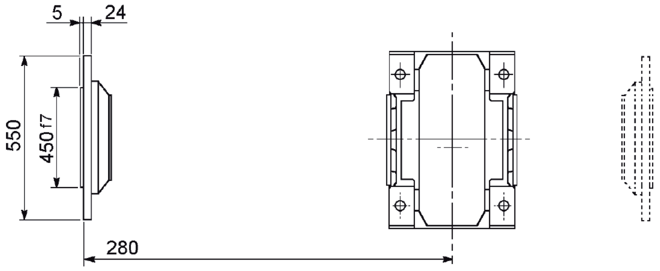
5
24
550
450 f7
280

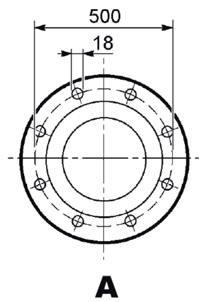

A

44 ZUBEHÖR

44.1 Schutzdeckel

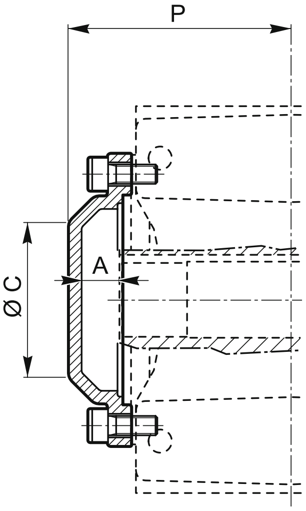

	A	Ø C	P
A 05	17.5	36	73.5
A 10	20.5	60	84.5
A 20	20	75	94
A 30	20	75	104
A 35	19.5	80	114
A 41	21	110	120
A 50	26	100	148.5
A 55	27	100	149
A 60	25	100	158
A 70	33.5	120	193.5
A 80	38	140	228
A 90	43	152	258

44.2 Drehmomentstütze

Mit der Drehmomentstütze wird die entsprechende Befestigungsschrauben mitgeliefert.

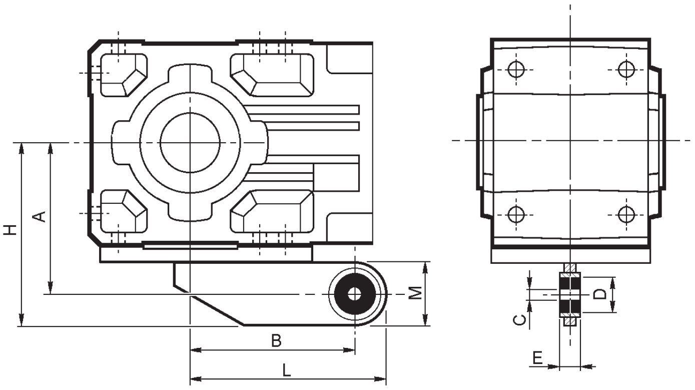

	A	B	C	D	E	H	L	M
A 05	90.5	80	10	30	20	115.5	105	50
A 10	108	118	10	30	20	138	148	60
A 20	118	137	10	30	20	148	167	60
A 30	135	150	20	40	25	170	185	70
A 35	145	165	20	40	25	180	200	70
A 41	157	200	20	40	25	192	235	70
A 50	200	250	32	56	40	245	295	90
A 55	200	250	32	56	40	245	295	90
A 60	225	300	32	56	40	270	345	90

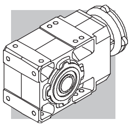

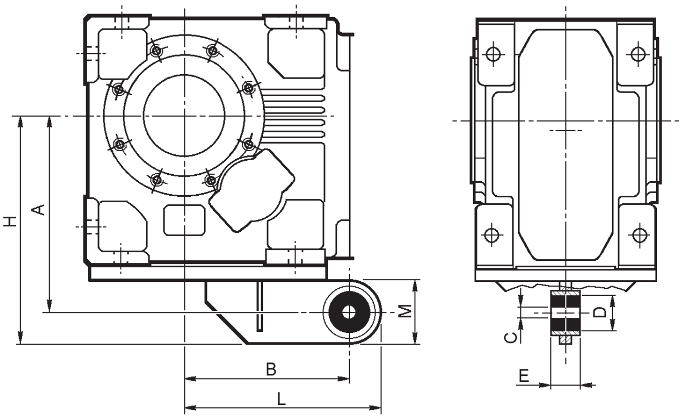

	A	B	C	D	E	H	L	M
A 70	289	250	32	56	40	334	295	90
A 80	357	300	42	78	60	422	365	130
A 90	410	350	42	78	60	475	415	130

45 MASCHINACHSE

Die angetriebene und mit dem Getriebe verbundene Welle sollte aus hochwertigem Stahl gemäß den Abmessungen der Tabelle gefertigt werden.

Darüber hinaus sollte die Welle axial gesichert werden, siehe folgendes Beispiel. Hierbei die einzelnen Komponenten in Abhängigkeit der verschiedenen Anwendungserfordernisse überprüfen und dimensionieren.

UH_

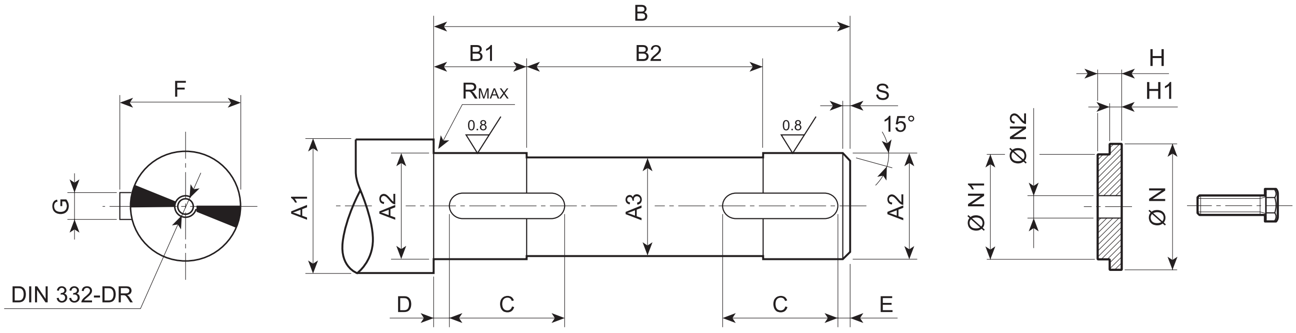

	A1	A2	A3	B	B1	B2	C	D	E	F	G	R	S	UNI 6604	N	N1	N2	H	H1	UNI 5739
A05 UH25	≥ 30	25 h7	24	102	21	62	20	2	2	28	8 h9	0.5	1.5	8x7x20 A	35	25 d9	9	7	5.5	M8x25
A10 UH30	≥ 35	30 h7	29	118	16	87	20	2	2	33	8 h9	0.5	1.5	8x7x20 A	35	30 d9	11	8.5	7	M10x30
A10 UH25	≥ 30	25 h7	24	118	16	87	20	2	2	28	8 h9	0.5	1.5	8x7x20 A	30÷35	25 d9	9	7	5.5	M8x25
A20 UH35	≥ 42	35 h7	34	138	20	98	20	2	2	38	10 h9	0.5	1.5	10x8x20 A	42	35 d9	11	8.5	7	M10x30
A20 UH30	≥ 35	30 h7	29	138	20	98	25	2	2	33	8 h9	0.5	1.5	8x7x25 A	35÷42	30 d9	11	8.5	7	M10x30
A30 UH40	≥ 47	40 h7	39	158	23	112	30	2	2	43	12 h9	0.5	1.5	12x8x30 A	47	40 d9	14	8.5	7	M12x35
A30 UH35	≥ 42	35 h7	34	158	23	112	30	2	2	38	10 h9	0.5	1.5	10x8x30 A	42÷47	35 d9	11	8.5	7	M10x30
A35 UH40	≥ 47	40 h7	39	175	33	109	40	2	2	43	12 h9	1	1.5	12x8x40 A	47	40 d9	14	8.5	7	M12x35
A35 UH35	≥ 42	35 h7	34	175	33	109	40	2	2	38	10 h9	1	1.5	10x8x40 A	42÷47	35 d9	11	8.5	7	M10x30
A41 UH45	≥ 52	45 h7	44	184	28	128	45	2.5	2.5	48.5	14 h9	1	2	14x9x45 A	52	45 d9	14	8.5	7	M12x35
A41 UH40	≥ 47	40 h7	39	184	28	128	50	2.5	2.5	43	12 h9	1	2	12x8x50 A	47÷52	40 d9	14	8.5	7	M12x35
A50 UH55	≥ 63	55 h7	54	226	37.5	151	55	2.5	2.5	59	16 h9	1	2	16x10x55 A	63	55 d9	22	10	8	M20x50
A50 UH50	≥ 57	50 h7	49	226	37.5	151	65	2.5	2.5	53.5	14 h9	1	2	14x9x65 A	57÷63	50 d9	18	10	8	M16x45
A55 UH60	≥ 70	60 h7	59	226	37.5	151	65	2.5	2.5	64	18 h9	2	2	18x11x65 A	70	60 d9	22	10	8	M20x50
A55 UH50	≥ 60	50 h7	49	226	37.5	151	75	2.5	2.5	53.5	14 h9	2	2	14x9x75 A	60÷70	50 d9	18	10	8	M16x45
A60 UH70	≥ 78	70 h7	69	248	48	152	70	2.5	2.5	74.5	20 h9	2.5	2	20x12x70 A	78	70 d9	22	10	8.5	M20x50
A60 UH60	≥ 68	60 h7	59	248	48	152	80	2.5	2.5	64	18 h9	2.5	2	18x11x80 A	68÷78	60 d9	22	10	8.5	M20x50
A70 UH80	v89	80 h7	79	303	58	187	90	3	3	85	22 h9	2.5	2.5	22x14x90 A	89	80 d9	22	10	8.5	M20x50
A70 UH70	≥ 78	70 h7	69	303	58	187	110	3	3	74.5	20 h9	2.5	2.5	20x12x110 A	78÷89	70 d9	22	10	8.5	M20x50
A80 UH90	≥ 99	90 h7	89	358	78	202	120	3	3	95	25 h9	2.5	2.5	25x14x120 A	99	90 d9	26	22	20.5	M24x70
A80 UH80	≥ 89	80 h7	79	358	78	202	130	3	3	85	22 h9	2.5	2.5	22x14x130 A	89÷99	80 d9	22	10	8.5	M20x50
A90 UH100	≥ 111	100 h7	99	408	78	252	160	3	3	106	28 h9	2.5	2.5	28x16x160 A	111	100 d9	26	22	20.5	M24x70
A90 UH90	≥ 99	90 h7	89	408	78	252	190	3	3	95	25 h9	2.5	2.5	25x14x190 A	99÷111	90 d9	26	22	20.5	M24x70

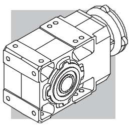

US

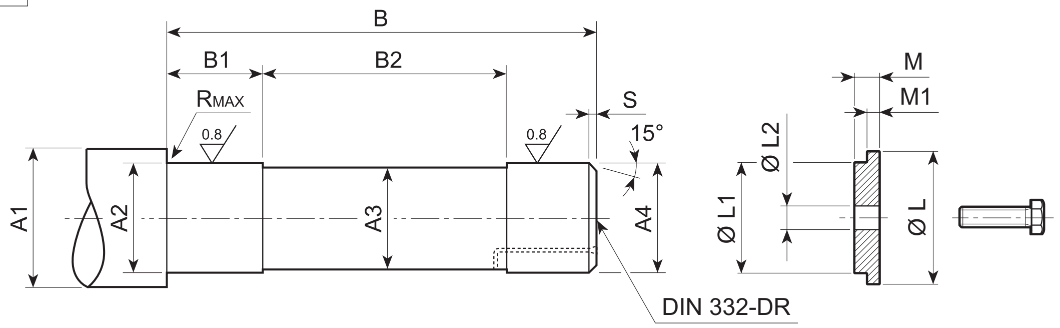

	A1	A2	A3	A4	B	B1	B2	R	S	L	L1	L2	M	M1	UNI 5739
A 05	≥ 35	27 h7	24	25 h6	129.5	32	63.5	0.5	1.5	29.5	25 d9	11	8.5	7	M10x30
A 10	≥ 42	32 h7	29	30 h6	147.5	34	77.5	0.5	1.5	35.5	30 d9	11	8.5	7	M10x30
A 20	≥ 48	37 h7	34	35 h6	170	40	89	0.5	1.5	43	35 d9	14	8.5	7	M12x35
A 30	≥ 54	42 h7	39	40 h6	191.5	48	95.5	0.5	1.5	49	40 d9	18	10	8.5	M16x45
A 35	≥ 54	42 h7	39	40 h6	208.5	48	112.5	0.5	1.5	49	40 d9	18	10	8.5	M16x45
A 41	≥ 60	47 h7	44	45 h6	222	53	117	1	2	54	45 d9	18	10	8.5	M16x45
A 50	≥ 72	57 h7	54	55 g6	264	46	156	1	2	72	55 d9	22	10	8.5	M20x50
A 55	≥ 72	62 h7	59	60 g6	266	46	158	2.5	2	72	60 d9	22	10	8.5	M20x50
A 60	≥ 90	72 h7	69	70 g6	293	48	178	2.5	2.5	85	70 d9	22	10	8.5	M20x50
A 70	≥ 104	82 h7	79	80 g6	352.5	90	172.5	2.5	2.5	95	80 d9	22	10	8.5	M20x50
A 80	≥ 114	92 h7	89	90 g6	416	100	216	2.5	2.5	105	90 d9	26	22	20.5	M24x70
A 90	≥ 126	102 h7	99	100 g6	469	78	321	2.5	2.5	120	100 d9	26	22	20.5	M24x70

UV

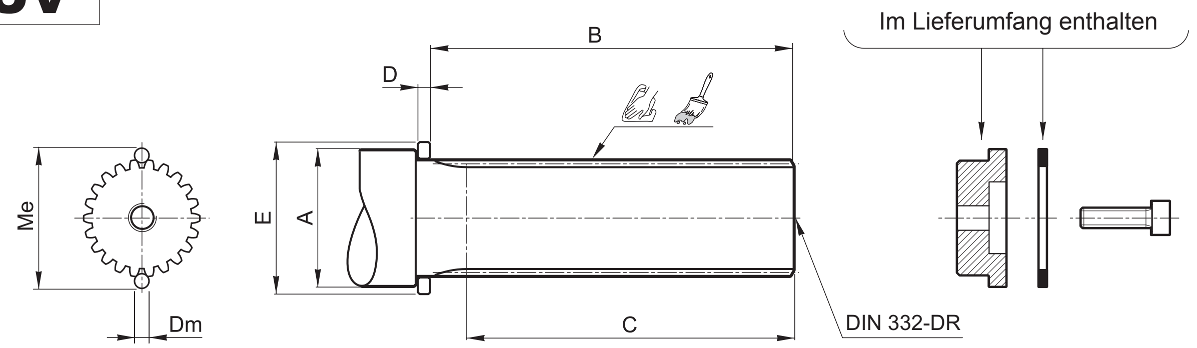

	DIN 5480	Me	Dm	A	B	C	D	E	ISO 4762
A 20	30x1.25x22	33.04 +0/-0.04	2.75	≥ 40	111.5	≥ 95	7	45	M10x35
A 30	35x2x16	38.93 +0/-0.04	4	≥ 45	130.5	≥ 112	7	50	M12x40
A 35	35x2x16	38.93 +0/-0.04	4	≥ 45	147.5	≥ 129	7	50	M12x40
A 41	45x2x21	48.86 +0/-0.04	4	≥ 55	155.5	≥ 136	7	60	M16x45
A 50	50x2x24	54.14 +0/-0.05	4	≥ 60	196	≥ 175	7	65	M16x45
A 55	50x2x24	54.14 +0/-0.05	4	≥ 60	196	≥ 175	7	65	M16x45
A 60	65x2x31	68.97 +0 /-0.05	4	≥ 75	213.5	≥ 191	7	80	M20x55

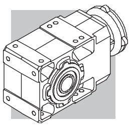

QF

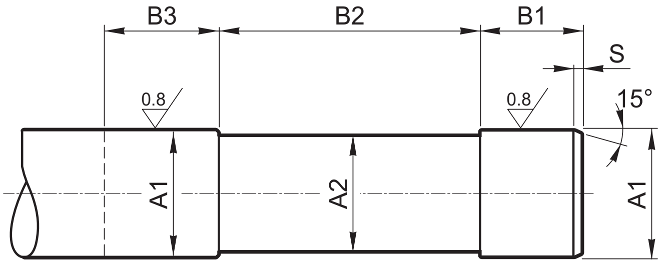

		A1	A2	B1	B2	B3	S
A 10	**QF25**	25 h6	24	41	95	≥ 50	1.5
	QF30	30 h6	29				
A 20	**QF25**	25 h6	24	41	115	≥ 50	1.5
	QF30	30 h6	29				
A 30	**QF35**	35 h6	34	45	130	≥ 54	1.5
	QF40	40 h6	39				
A 35	**QF35**	35 h6	34	45	146.5	≥ 54	1.5
	QF40	40 h6	39				
A 41	**QF40**	40 h6	39	47	151.5	≥ 56	2
	QF45	45 h6	44				
A 50	**QF50**	50 h6	49	48	197	≥ 57	2
	QF55	55 h6	54				
A 55	**QF55**	55 h6	54	50	190	≥ 59	2
	QF60	60 h6	59				
A 60	**QF60**	60 h6	59	57	203	≥ 66	2.5
	QF65	65 h6	64				
	QF70	70 h6	69				

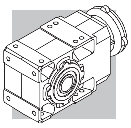

KEGELRADGETRIEBE SERIE A IN ATEX AUSFUEHRUNG

46 BESCHREIBUNG DER ATEX-ZULASSUNG

46.1 Explosionsgefährdeter bereich

Im Sinne der Richtlinie 2014/34/EU ist eine **explosionsfähige Atmosphäre** definiert als ein Gemisch:

a. aus **brennbaren Stoffen** in Form von Gasen, Dämpfen, Nebeln oder Stäuben;
b. und **Luft**;
c. unter atmosphärischen Bedingungen;
d. in dem sich der Verbrennungsvorgang nach erfolgter Entzündung auf das gesamte unverbrannte Gemisch überträgt (zu beachten ist, dass (hauptsächlich bei Vorliegen von Staub) nicht immer die gesamte Menge an brennbarem Material verbrennt).

Eine Atmosphäre, die aufgrund der örtlichen und/oder betrieblichen Bedingungen explosionsfähig werden kann, wird als **explosionsgefährdeter Bereich** bezeichnet. Nur für diese Art von explosionsgefährdetem Bereich sind die Produkte, die unter die Richtlinie 2014/34/EU fallen, ausgelegt.

46.2 Harmonisierte europäische atex-normen

Die europäische Richtlinie 2014/34/EU beschreibt die wesentlichen Sicherheitsanforderungen zur bestimmungsgemäßen Verwendung von Produkten in explosionsgefährdeten Bereichen innerhalb der Mitgliedsstaaten der Europäischen Union. Diese Richtlinie weist die Geräte außerdem bestimmten, von der Richtlinie selbst festgelegten **Kategorien** zu.

Es folgt eine Darstellung der **Zonen,** in die der Betreiber eines Betriebs mit potentiell explosionsfähiger Atmosphäre die Verwendungsbereiche der Geräte unterteilen muss.

(C 1)

Zonen		Häufigkeit, mit der sich potentiell explosionsfähige Atmosphäre bildet	Art der Gefahr
Gasförmige Atmosph. G	Staubförmige Atmosph. D		
0	20	Konstante Präsenz oder lang andauernde Präsenz	Permanent
1	21	Gelegentlich bei normalem Betrieb	Potentiell
2	22	Sehr selten und/oder kurzzeitig bei normalem Betrieb	Minimal

Die Getriebe der Produktion BONFIGLIOLI RIDUTTORI aus dem vorliegenden Katalog können in den Zonen 1, 21 installiert werden, in der obigen Abbildung hellgrau hervorgehoben und eignen sich auch für den Einbau in Bereichen mit geringerem Schutzniveau (Zonen 2 und 22).

Ab dem 20. April 2016 gelten die ATEX-Richtlinien 2014/34/EU zwingen auf gesamten Gebiet der Europäischen Union und ersetzt die bis dahin geltenden nationalen und europäischen Gesetze zu explosionsfähiger Atmosphäre und die vorherige Richtlinie 94/9/EG. Es gilt zu unterstreichen, dass die Richtlinien zum ersten Mal auch mechanische, hydraulische und pneumatische Geräte mit einschließen und nicht wie bisher nur elektrische Geräte. In Bezug auf die Rechts- und Verwaltungsvorschriften der Mitgliedstaaten für Maschinen 2006/42/EG muss präzisiert werden, dass die europäische Richtlinie 2014/34/EU in Bezug auf die von potentiell explosionsfähiger Atmosphäre ausgehenden Gefahren sehr spezifische und detaillierte Angaben macht, während die Rechts- und Verwaltungsvorschriften der Mitgliedstaaten für Maschinen in Bezug auf Sicherheit bei Explosionsrisiken nur sehr allgemeine Angaben enthält (Anhang I). Zum Schutz vor Explosionen in potentiell explosionsfähiger Atmosphäre gilt jedoch vorrangig die europäische Richtlinie 2014/34/EU, die angewandt werden muss. Für alle weiteren Risiken, die von Geräten ausgehen können, müssen außerdem auch die Rechts- und Verwaltungsvorschriften der Mitgliedstaaten für Maschinen angewendet werden.

46.3 Schutzgrade für die verschiedenen gerätekategorien

Die verschiedenen Gerätekategorien müssen gemäß der vom Betreiber festgesetzten Betriebsparameter bei verschiedenen Schutzgraden betrieben werden können.
Die Verfügbarkeit der BONFIGLIOLI RIDUTTORI Produkte ist erneut grau hervorgehoben.

(C 2)

Schutzgrad	**Kategorie**		**Schutzart**	**Betriebsbedingungen**
	Gruppe I	**Gruppe II**		
Sehr hoch	M1		Zwei unabhängige Schutzmaßnahmen bzw. auch dann sicher, wenn zwei Fehler unabhängig voneinander auftreten.	Die Geräte bleiben bei vorhandener explosionsfähiger Atmosphäre weiter einsatzbereit und werden weiter betrieben.
Sehr hoch		**1**	Für normalen Betrieb und erschwerte Betriebsbedingungen geeignet.	Geräte bleiben in den Zonen 0, 1, 2 (G) und 20, 21, 22 (D) weiter einsatzbereit und werden weiter betrieben.
Hoch	M2		Im normalen Betrieb und bei üblicherweise auftretenden Fehlern sicher.	Geräte werden bei vorhandener potentiell explosionsfähiger Atmosphäre ausgeschaltet.
Hoch		**2**	Im normalen Betrieb und bei üblicherweise auftretenden Fehlern sicher.	Geräte bleiben in den Zonen 1, 2 (G) und 21, 22 (D) weiter einsatzbereit und werden weiter betrieben.
Normal		**3**	Im normalen Betrieb sicher.	Geräte bleiben in den Zonen 2 (G) und 22 (D) weiter einsatzbereit und werden weiter betrieben.

46.4 Bestimmung der gruppen

Gruppe I Gilt für Geräte zur Verwendung in Untertagebetrieben von Bergwerken und deren Übertageanlagen, die durch Grubengas und/oder brennbare Stäube gefährdet werden können.

Gruppe II Gilt für Geräte zur Verwendung in den übrigen Bereichen, die durch eine explosionsfähige Atmosphäre gefährdet werden können.

BONFIGLIOLI RIDUTTORI Produkte dürfen nicht im Bergbau, der nach **Gerätegruppe I** und **II**, Kategorie 1, klassifiziert ist eingesetzt werden.

Die Festlegung der Geräte in Gerätegruppen, -kategorien und in Zonen wird daher in der folgenden Darstellung illustriert. Die Verfügbarkeit der BONFIGLIOLI RIDUTTORI Produkte ist erneut grau hervorgehoben.

(C 3)

Gruppe	**I** **Bergwerke, Grubengas**		**II** **Weitere potentiell explosionsgefährdete Bereiche aufgrund von Gas- oder Staubvorkommnissen**					
Kategorie	M1	M2	1		2		3	
Atmosphäre [(1)]			G	D	G	D	G	D
Zone			0	20	1	21	2	22
Schutzart Getriebe					Ex h Gb	Ex h Db	Ex h Gc	Ex h Dc

[(1)] **G** = Gas **D** = Staub

Die hier beschriebenen Produkte entsprechen den Mindestanforderungen der europäischen Richtlinie 2014/34/EU, die Teil der unter dem Namen ATEX (ATmosphères EXplosibles) bekannten Richtlinien sind.

46.5 Konformitätserklärung

Das Konformitätszertifikat garantiert die Konformität des Produkts mit der Richtlinie 2014/34/EU.
Die Gültigkeit des Zertifikats hängt vom Einhalten der Anweisungen zum sicheren Betrieb des Produktes in all seinen Betriebsphasen ab, die in der Betriebs-, Installations- und Wartungsanleitung nachzulesen sind.
Der Betreiber kann sich selbige auf der Website www.bonfiglioli.com downloaden, wo die Anleitung in verschiedenen Sprachen in PDF-Format zur Verfügung steht.
Dabei sind vor allem die Umgebungsbedingungen zu berücksichtigen. Deren Nichteinhalten während des Betriebs kann zum Verfall der Zertifikatsgültigkeit führen.
Bei Zweifeln bezüglich der Gültigkeit des Konformitätszertifikats kontaktieren Sie bitte den Technischen Kunden- und Handelsservice von BONFIGLIOLI RIDUTTORI.

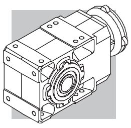

47 ANTRIEBSAUSWAHL

Um die Getriebe und Getriebe vorbereitet für IEC-motor richtig auszuwählen zu können, muß man über einige grundlegende Daten verfügen, die wir in der folgende Tabelle (A6) zusammengefaßt haben. Eine Kopie dieses Formulars durch den Kunden Tabelle gefüllt ist, um unser Service Center gesendet werden, der dann die für die gewünschte Anwendung geeignete Auslegung wählt.

(C 4)

Bonfiglioli
power, control and green solutions

ERFORDERLICHE TECHNISCHE DATEN ZUR ANTRIEBSAUSLEGUNG VON GETRIEBEN SERIE A

Nr:
Datum:
Rev_ Datum:

		A)	*ALGEMEINE DATEN*				
#	1		Firma / Kunde				
#	2		Kontakt				
#	3		Branche / Händler				
#	4		Bestellmenge				
	5		Lieferzeit				
		B$_1$)	*ELEKTRISCHER MOTOR*				
	6		Motor Typ				
#	7	P_{n1}	Nennleistung Motor		[kW]		
#	8	P_{r1}	Erforderliche Motorleistung		[kW]		
	9	n_1	Eingangsdrehzahl		[min^{-1}]		
	10		Polzahl				
		C)	*GETRIEBE*				
#	11		Getriebekonfiguration				
#	12	i	Untersetzung				
#	13	n_1	Eingangsdrehzahl		[min^{-1}]		
#	14	M_{r2}	Erforderliches Abtriebsmoment		[Nm]		
#	15	f_S	Erfoderlicher Betriebsfaktor				
	16		Drehrichtung der Abtriebswelle [Blickrichtung auf Abtriebswelle]:	**CW**	**CCW**		
#	17	L_{10H}	Lagerlebensdauer		[h]		
	18		Verzahnungslebensdauer		[h]		
	19	SF_{min}	Sicherheit Zahnfussfestigkeit		Bezugswert (ISO bevorzugt)		
	20	SH_{min}	Sicherheit Flankfestigkeit		Bezugswert (ISO bevorzugt)		
		D)	*ZUSÄTZLICHE LASTEN*				
	21	R_{c2}	Radiallast an Abtriebtswelle		[N]	Richtung [°]	
	22	x_2	Lastangriffsangriffspunkt bezogen auf Wellenschulter		[mm]		
	23	R_{c1}	Radiallast an Antriebswelle		[N]	Richtung [°]	
	24	x_1	Lastangriffsangriffspunkt bezogen auf Wellenschulter		[mm]		
	25	A_{n2}	Axiallast an Abtriebswelle (+ / -)		[N]	+ = Druck	
	26	A_{n1}	Axiallast an Antriebswelle (+ / -)		[N]	- = Zug	
		E)	*APPLIKATION*				
#	27		Applikationsart				
	28		Arbeitszyklus	Zeitabschnitt	Getriebeabtriebsmoment	Getriebeabtriebsdrehzahl	
				%	[Nm]	[min^{-1}]	
				,,,,	,,,,		
				,,,,	,,,,		
				,,,,	,,,,		
	29		Notizen zum Arbeitszyklus:				
	30		Auslegung gem. FEM Klasse	T-	L-	M-	
	31		Anzahl Unterbrechungen		[%]		
	32	T_{AMB}	Umgebungstemperatur		[°C]		
#	33		Höhe über N. N.		[m]		
	34		Umgebungsart	enger Innenraum	Großer Innenraum	Aussenbereich	
		F)	NOTIZEN				
	35		Notizen und zusätzliche Kundenanforderungen:				
# Pflichtfeld für Auslegung							

48 INSTALLATIONS-UND WARTUNGSANLEITUNG

Alle Hinweise für Installation, Betrieb und Wartung des Produktes finden sich in der Benutzerhandbuch.Der Betreiber kann sich selbige auf der Website www.bonfiglioli.com downloaden, wo die Anleitung in verschiedenen Sprachen in PDF-Format zur Verfügung steht. Die Unterlagen müssen an geeigneter Stelle und in der Nähe des Installationsort des Getriebes aufbewahrt werden, damit alle zur Handhabung des Getriebes Befugten während dessen gesamter Betriebsdauer Zugang dazu haben.

49 BAULICHE MERKMALE DER ATEX-BAUGRUPPEN

- Ausstattung mit Serviceverschlüssen für die regelmäßige Kontrolle des Schmierstoffstandes.
- Entlüftungsschrauben mit Rückschlagventil anbringen.
- Schmierstoffbefüllung ab Werk (synthetisches Öl), je nach im Auftrag spezifizierter Einbaulage.
- Fluor-Elastomer - Dichtungsringe.
- Keine Kunststoffteile.
- Maschinenschild mit verwendeten Produktkategorie und Schutzart.
- Komponenten einsetzen, die höheren Temperaturen standhalten als den vorgesehenen Grenzwerten.
- Wärmeempfindliche, Messfühler anbringen.

(C 5)

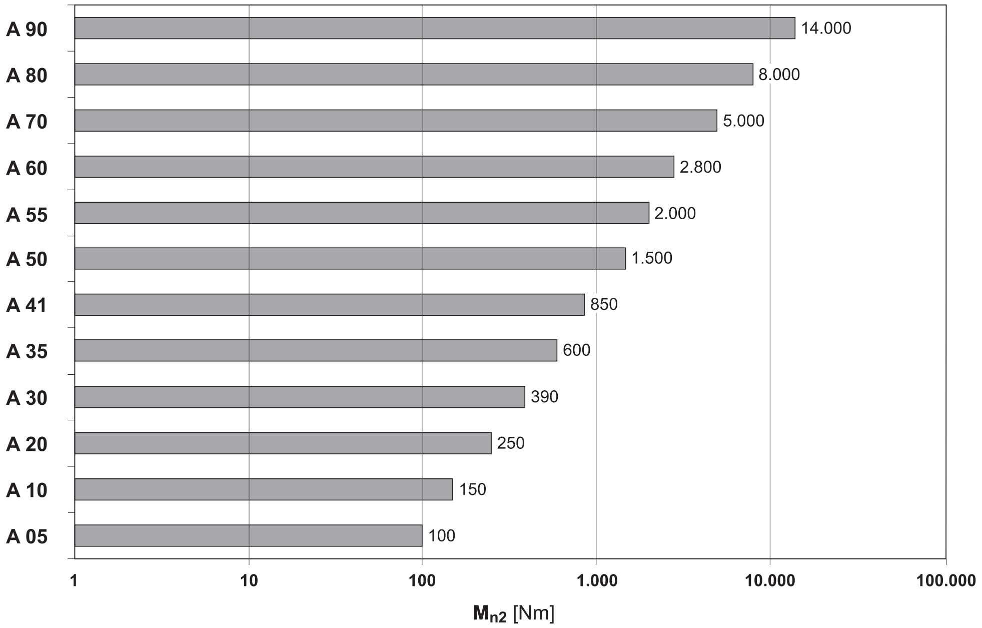

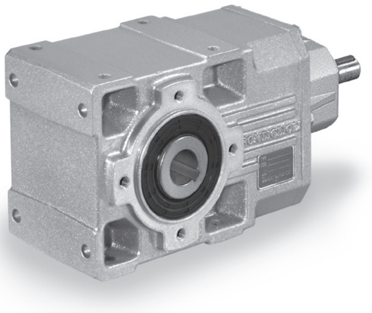

50 BAUFORMEN

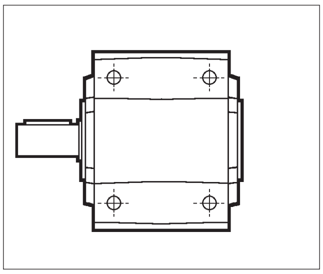

UR

Abtriebswelle mit einem Wellenende

A 10 ... A 90

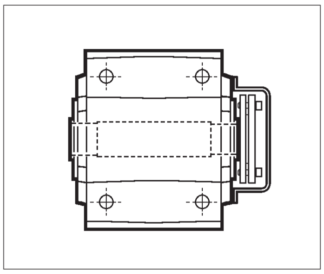

US

Abtriebshohlwelle und Schrumpfscheibe

A 05 ... A 90

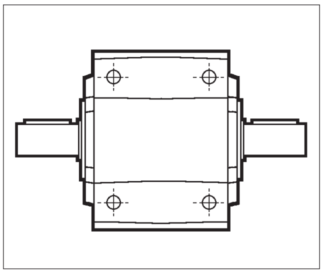

UD

Abtriebswelle mit zwei Wellenenden

A 10 ... A 90

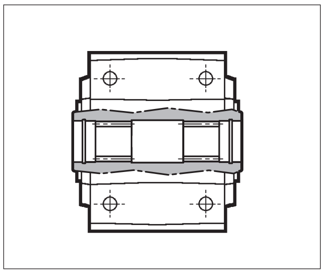

UV

Hohlwelle mit Vielkeilverzahnung DIN 5480

A 20 ... A 60

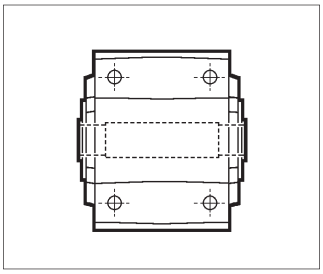

UH

Abtriebshohlwelle mit Passfedernut

A 05 ... A 90

Bauformen mit aufgesetztem Flansc

Die angegebenen Bilder zeigen die den Grundbauformen anbaubaren Flansche und ihre Positionerung (①,②).

UR F1... **UR F2...**

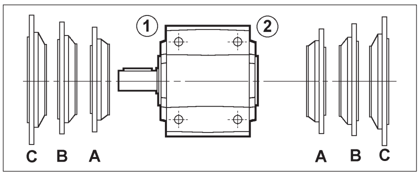

UD F1... **UD F2...**

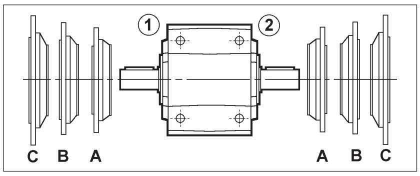

UH... F1... **UH... F2...**

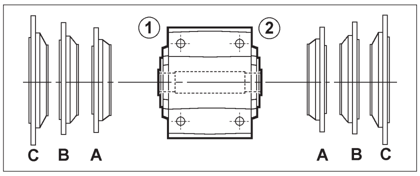

US F1... **US F2...**

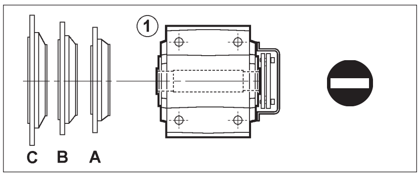

UV F1... **UV F2...**

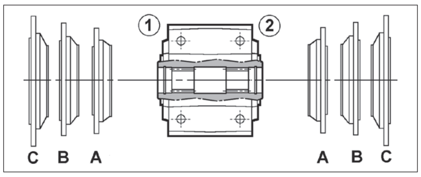

51 BEZEICHNUNG

GETRIEBE

A 50 3 UH50 F1A 99.5 P90 B3 EX

OPTIONEN

EINBAULAGEN

B3 (Standard), **B6**, **B7**, **B8**, **VA**, **VB**

BEZEICHNUNG DER ANTRIEBSSEITE

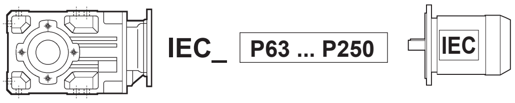

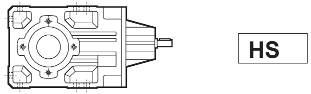

ÜBERSETZUNG

GRÖSSE UND LAGE DES ANTRIEBSFLANSCHS
(angeben nur wenn angefragt)

F = Ausführung mit Flansch
1, **2** = Flanschlage
A, **B**, **C** = Flanschgröße

BAUFORM

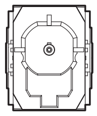

UH_

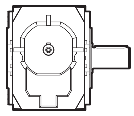

UR
(A 10...A 90)

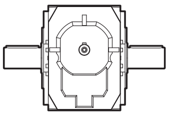

UD
(A 10...A 90)

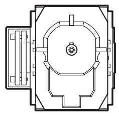

US
(A 05...A 90)

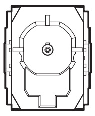

UV
(A 20...A 60)

A 05	**A 10**	**A 20**	**A 30**	**A 35**	**A 41**	**A 50**	**A 55**	**A 60**	**A 70**	**A 80**	**A 90**
UH25	**UH25**	**UH30**	**UH35**	**UH40**	**UH45**	**UH50**	**UH60**	**UH60**	**UH70**	**UH80**	**UH90**
—	UH30	UH35	UH40	UH35	UH40	UH55	UH50	UH70	UH80	UH90	UH100

GETRIEBESTUFEN

2 (A 05...A 60), **3** (A 20...A 90), **4** (A 50...A 90)

GETRIEBEBAUGRÖSSE

05, **10**, **20**, **30**, **35**, **41**, **50**, **55**, **60**, **70**, **80**, **90**

TYP: **A** = Kegelradgetriebe

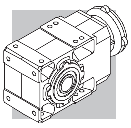

Getriebe Optionen

EX

Das Getriebe kann in den Zonen 1 und 21 installiert werden (Kategorien 2G und 2D).
Die Temperaturklasse ist T4 (max. 135°C).

NACHWEISE

AC - Konformitätsbescheinigung

Dokument mit dessen Ausstellung die Konformität des Produkts mit dem Auftrag, und dessen Konstruktion in Konformität mit den vom Qualitätsmanagementsystem von Bonfiglioli Riduttori vorgesehenen Standardfertigungs- und -kontrollverfahren bescheinigt wird.

CC – Prüfzeugnis

Die Bestellung führt zur Durchführung von Kontrollen der Konformität mit dem Auftrag, allgemeinen Sichtkontrollen und instrumentalen Prüfungen der Passmaße. Des Weiteren werden allgemeine Betriebskontrollen bei Leerlauf sowie Prüfungen der Funktionalität der Dichtungen bei Stillstand und während des Betriebs durchgeführt. Die Prüfung wird anhand einer Stichprobe des Versandloses durchgeführt.

52 WEITERE INFORMATIONEN ÜBER GETRIEBE UND GETRIEBEMOTOREN

Einbaulagen, technische Daten, Motorverfügbarkeiten, Trägheitsmomente und Abmessungen für die **A-EX (Atex)** Serie unterscheiden sich nicht von der Standard-Serie **A**. Alle Informationen sind in den entsprechenden Kapitel des Kataloges zu finden.

AUFSTECKGETRIEBE SERIE F

53 KONSTRUKTIVE EIGENSCHAFTEN

Die wichtigsten konstruktiven Eigenschaften sind:

- Baueinheitensystem
- Kompaktheit
- universelle Montage
- hohe Wirkungsgrade
- niedriger Geräuschpegel
- einsatzgehärtete und gehärtete Zahnräder aus legiertem Stahl
- Nicht lackierte Aluminiumgehäuse bei den Größen 10, 20 und 25; hochwiderstandsfähige und lackierte Gußgehäuse bei den anderen Größen.

(D 44)

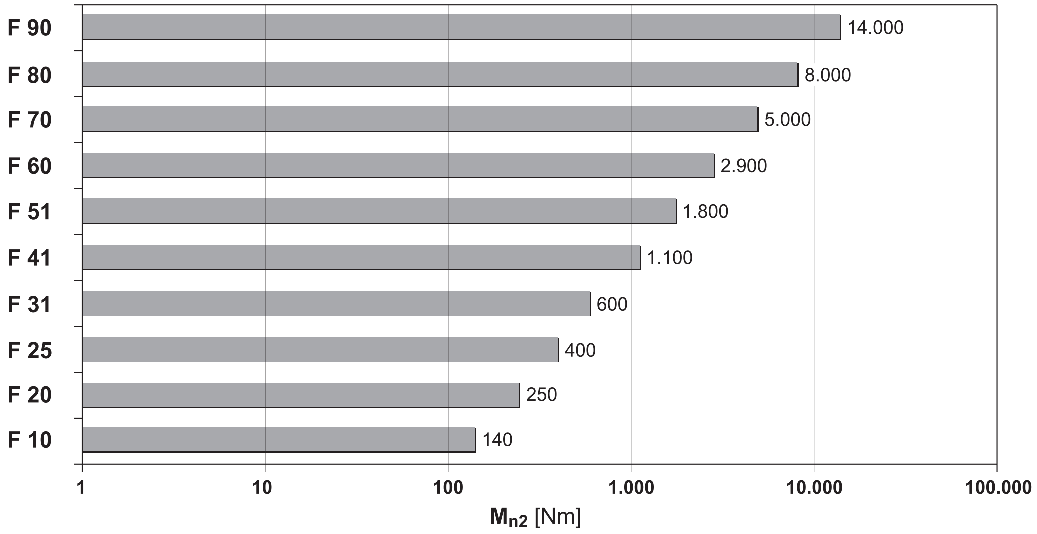

* Für eventuelle Begrenzungen bezüglich der Bauform QF siehe Kapitel “BAUFORMEN”.

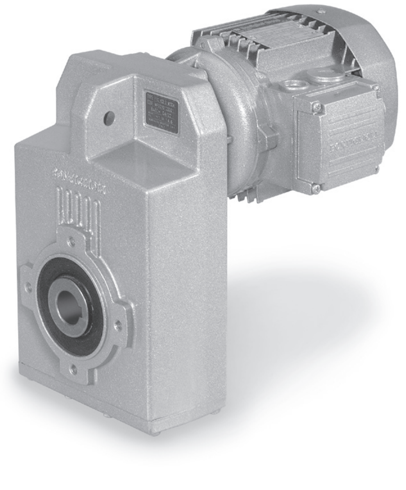

54 BAUFORMEN

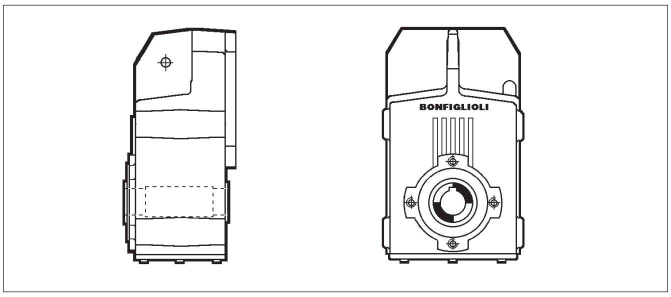
BONFIGLIOLI

H

Abtriebshohlwelle mit Passfedernut

F 10 ... F 90

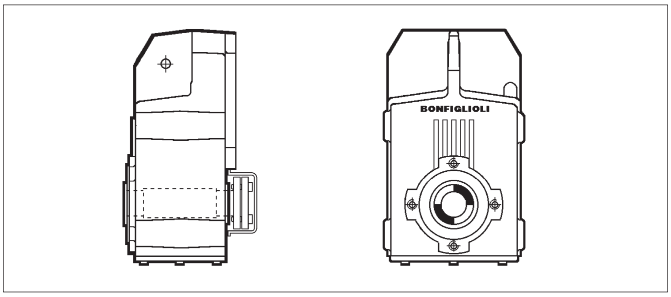
BONFIGLIOLI

S

Abtriebshohlwelle und Schrumpfscheibe

F 10 ... F 90

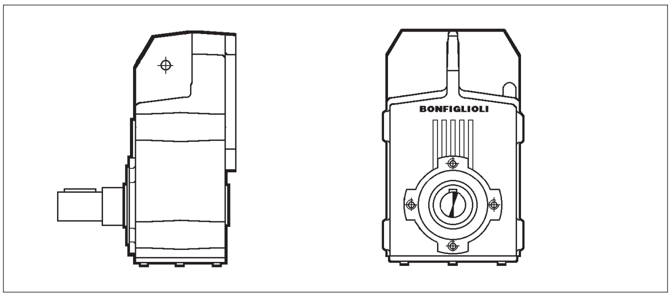
BONFIGLIOLI

R

Abtriebsvollwelle

F 10 ... F 90

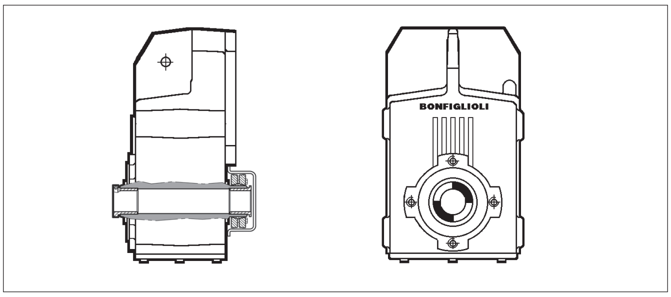
BONFIGLIOLI

QF (Quick-fit)

Hohlwelle mit Adapterbuchsen und Schrumpfscheibe

F 10 ... F 60

$M_{n2\,max}$ [Nm]	
F 25 QF30	350
F 41 QF42	850
F 41 QF45	1000
F 51 QF50	1750

Bauformen mit angeschraubten Flansch

Die angegebenen Bilder zeigen die an den Grundbauformen anbaubaren Flansche.

H... F...

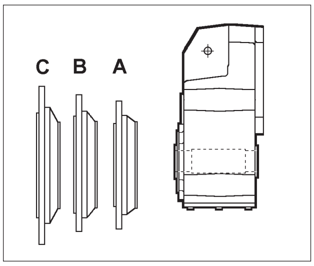

S F...

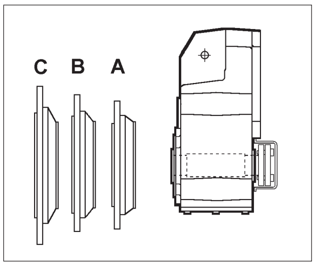

R F...

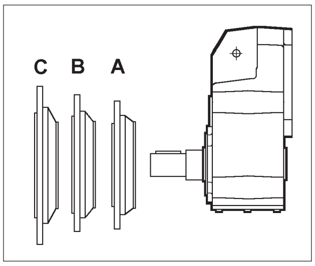

QF...

⛔

55 BEZEICHNUNG

GETRIEBE

F 10 2 H30 FA 48.7 S1 H5 .....

OPTIONEN

EINBAULAGEN

H1 (Default), **H2**, **H3**, **H4**, **H5**, **H6**

BEZEICHNUNG DER ANTRIEBSSEITE

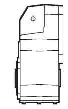

S05 ... S5

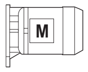

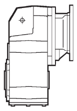

IEC_ **P63 ... P250**

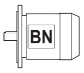

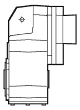

SK_

SC_

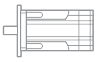

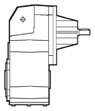

HS

ÜBERSETZUNG

GRÖSSE UND LAGE DES ANTRIEBSFLANSCHS
(angeben nur wenn angefragt)

F = Ausführung mit Flansch

A, **B**, **C** = Flanschgröße

BAUFORM

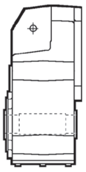

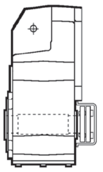

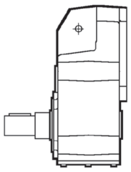

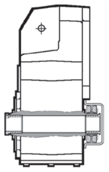

H										
	F 10	F 20	F 25	F 31	F 41	F 51	F 60	F 70	F 80	F 90
Standard	**H25**	**H30**	**H35**	**H35**	**H40**	**H50**	**H60**	**H80**	**H90**	**H100**
Alternative	H30	H35	H40	H40	H45	H55	H70	H70	H80	H90

S (F 10...F 90)

R (F 10...F 90)

QF (F 10...F 60)

Alternative Durchmesser auf Anfrage

GETRIEBESTUFEN

2 (F 10...F 51), **3** (F 20...F 90), **4** (F 31...F 90)

GETRIEBEBAUGRÖSSE

10, **20**, **25**, **31**, **41**, **51**, **60**, **70**, **80**, **90**

TYP: **F** = Aufsteckgetriebe

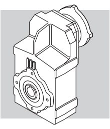

MOTOR — BREMSE

M **1LA** **4** 230/400-50 IP54 CLF ..... **W** **FD** 7.5 R SB 220 SA .....

OPTIONEN

BREMSVERSORGUNG

GLEICHRICHTERTYP AC/DC
NB, **SB**, **NBR**, **SBR**

BREMSENHANDLÜFTUNG
R, **RM**

BREMSMOMENT

BREMSENTYP
FD (G.S. Bremse)
FA (W.S. Bremse)

KLEMMENKASTENLAGE
W (default), **N**, **E**, **S**

BAUFORM
— (Kompaktmotor)
B5 (IEC - Motor)

ISOLIERUNGSKLASSE
CL F Standard
CL H Option

SCHUTZART
IP55 Standard (IP54 - Bremssmotor)

SPANNUNG - FREQUENZ

POLZAHL
2, **4**, **6**, **2/4**, **2/6**, **2/8**, **2/12**, **4/6**, **4/8**

MOTOR-BAUGRÖSSE
0B ... 5LA (Kompaktmotor)
63A ... 250MA (IEC - Motor)

MOTORTYP
M = Dreiphasen Kompaktmotor
BN = Dreiphasen IEC - Motor

55.1 Getriebe Optionen

AL, AR

Auf Anfrage kann das Getriebe mit einer Rücklaufsperre ausgerüstet werden, um die Drehung der Abtriebswelle in nur einer Richtung zu ermöglichen. In der folgende Tabelle werden die Getriebe angegeben, die mit einer Rücklaufsperre geliefert werden können.

(D 45)

F 31 2*	**F 41 2** ⊖ (6.7; 10.8)					
F 31 3*	**F 41 3**	**F 51 3**	**F 60 3**	**F 70 3**	**F 80 3**	**F 90 3**
		F 51 4	**F 60 4**	**F 70 4**	**F 80 4**	**F 90 4**

* Servoflansche Typ S_60A, S_60B und S_80A stehen nicht mit Rücklaufsperre zur Verfügung.

Bei Bestellung bitte die gewünschte freie Drehrichtung durch die Option AL oder AR (Tabelle D46) in der Getriebe- oder Motorbezeichnung angeben.

⚠ HINWEIS: Sollte ein Auslösen der Rücklaufsperre wiederholt erforderlich sein, muss kontrolliert werden, dass der Drehmoment am Abtrieb, der sich aus der Applikation der Last ergibt, 70% des Nenndrehmoments M_{n2} für dieses spezifische Getriebe nicht übersteigt.

(D 46)

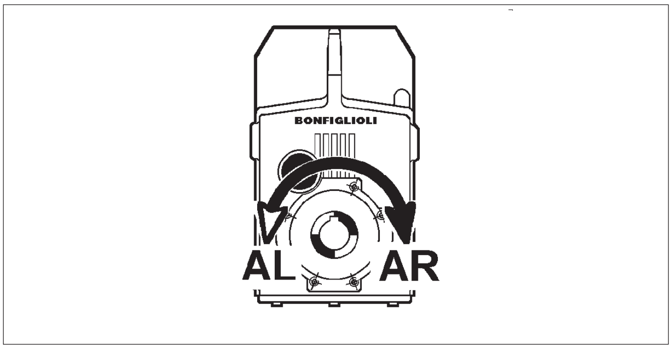

SO

Die Getriebetypen F 10, F 20, F 25, F 31 und F 41, die normalerweise inklusive Schmiermittel geliefert werden, werden ohne Schmierstoff geliefert.

LO

Die Getriebe F 51, F 60, F 70, F 80 und F 90, die gewöhnlich ohne Schmiermittel geliefert werden, werden in Übereinstimmung mit der Einbaulage mit dem standardmäßigen von BONFIGLIOLI RIDUTTORI verwendeten synthetischen Schmierstoff gefüllt.

DV

2 Wellendichtringe auf der eintreibenden Welle. (Nur für Kompaktgetriebemotoren).

VV

Wellendichtringe aus Fluor-Elastomer auf der eintreibenden Welle.

PV

Alle Wellendichtringe aus Fluor-Elastomer.

FL

Auf Anfrage kann das Getriebe bzw. der Getriebemotor F 10...F 41 mit seitlich bearbeiteten Flächen und mit Gewindebohrungen augestattet werden, die eine Befestigung ermöglichen. In der folgende Tabelle werden die Gewindesgrößen und Abstände angegeben (Für die Getrieben F 51...F 90 gehört diese Option zur Serienausstattung).

(D 47)

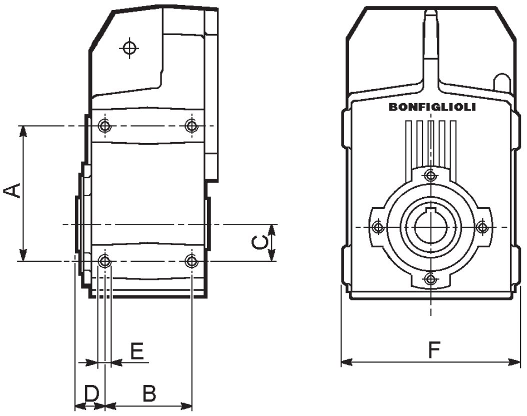

	A	B	C	D	E	F
F 10	115	60	35	21.25	M8x16	163
F 20	130	70	40	26.5	M10x20	181
F 25	130	70	40	27.5	M10x20	181
F 31	147	80	45	30	M12x20	203
F 41	190	95	60	32.5	M12x22	235

OBERFLÄCHENSCHUTZ

Wenn keine besondere Korrosionsschutzklasse gefordert ist, ist die lackierte Oberfläche des Getriebes mindestens mit einem Schutz gegen Korrosion der Klasse C2 nach UNI EN ISO 12944-2 geschützt. Für eine bessere Witterungsbeständigkeit können die Getriebe, durch eine Lackierung des ganzen Getriebes, mit einem Oberflächenschutz der Klassen **C3** und **C4** geliefert werden.

(D 48)

OBERFLÄCHENSCHUTZ	Typische Umgebungen	Maximale Oberflächen-temperatu	Korrosionsschutzklasse nach UNI EN ISO 12944-2
C3	Stadt- und Industrieumgebung mit bis zu 100% relativer Luftfeuchtigkeit (mittlere Luftverschmutzung)	120°C	C3
C4	Industrie- und Küstengebiete und Chemieanlagen mit bis zu 100% relativer Luftfeuchtigkeit (hohe Luftverschmutzung)	120°C	C4

Getriebe mit einem optionalen Korrosionsschutz der Klassen C3 oder C4 sind in einer Auswahl von Farben verfügbar. Wenn keine spezielle Farbe gefordert ist, (siehe Option Lackierung) ist der Decklack in RAL 7042.

Unsere Getriebe können auch mit Oberflächenschutz der Klasse C5 nach UNI EN ISO 12944-2 versehen werden. Für weitere technische Informationen wenden Sie bitte an unseren Technischen Service.

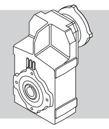

LACKIERUNG

Getriebe mit Oberflächenschutz der Klasse C3 oder C4, sind in den, in der folgenden Liste aufgelisteten Farben, verfügbar.

(D 49)

LACKIERUNG	Farbe	RAL Nummer
RAL7042*	Traffic Grey A	7042
RAL5010	Gentian Blue	5010
RAL9005	Jet Black	9005
RAL9006	White Aluminium	9006
RAL9010	Pure White	9010

* Die Getriebe werden in dieser Standardfarbe geliefert, wenn keine andere Farbe angegeben ist.

Hinweis – Die Option “Lackierung” kann nur im Zusammenhang mit dem Oberflächenschutz spezifiziert werden.

NACHWEISE

AC - Konformitätsbescheinigung Dokument mit dessen Ausstellung die Konformität des Produkts mit dem Auftrag, und dessen Konstruktion in Konformität mit den vom Qualitätsmanagementsystem von Bonfiglioli Riduttori vorgesehenen Standardfertigungs- und -kontrollverfahren bescheinigt wird.

CC – Prüfzeugnis
Die Bestellung führt zur Durchführung von Kontrollen der Konformität mit dem Auftrag, allgemeinen Sichtkontrollen und instrumentalen Prüfungen der Passmaße. Des Weiteren werden allgemeine Betriebskontrollen bei Leerlauf sowie Prüfungen der Funktionalität der Dichtungen bei Stillstand und während des Betriebs durchgeführt. Die Prüfung wird anhand einer Stichprobe des Versandloses durchgeführt.

55.2 Zubehör

siehe Abschnitt 65 des Kataloges.

55.3 Optionen Motoren

AL, AR

Für Getriebemotoren mit Kompaktmotor der Baureihe M steht die Option Rücklaufsperre zur Verfügung, welche direkt am Motor installiert ist und im Abschnitt über die Elektromotoren in diesem Katalog beschrieben wird. Die folgende Tabelle zeigt die freie Drehrichtung des Getriebemotors, anhand welcher die Option entsprechend gewählt werden muss.

(D 50)

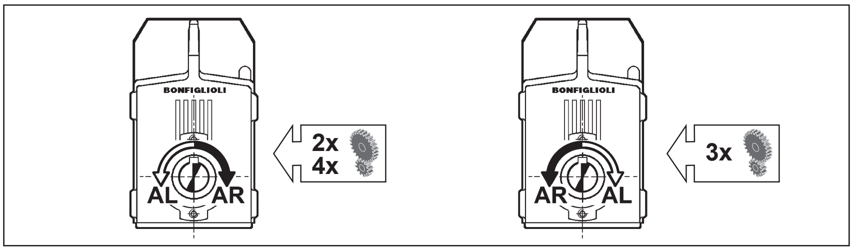

Weitere Informationen zu Optionen, finden Sie im Abschnitt “Elektromotoren”.

56 EINBAULAGEN UND LAGE DES KLEMMENKASTENS

Die Angaben zur Lage des Klemmenkastens beziehen sich auf das von der Lüfterseite her betrachtete Getriebe. Die Standardorientierung ist schwarz hervorgehoben (W).

Winkellage des Handlüfterhebels.
Bei Bremsmotoren wird der Handlüfterhebel (auf Anfrage) standardmäßig auf 90° gegenüber des Klemmkastens (AB- Anordnung) geliefert; wird eine andere Anordnung verlangt, muß dies bei der Bestellung durch die geeignete Option angegeben werden.

(D 51)

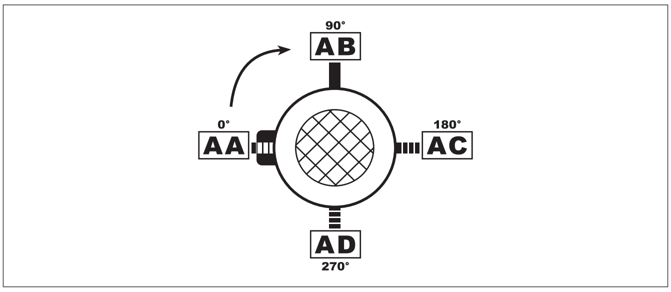

F ...

H1

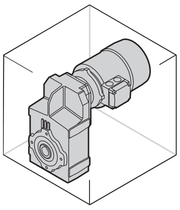
_S

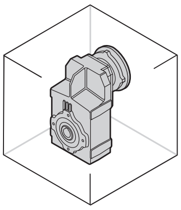
_P(IEC) **_SK / _SC**

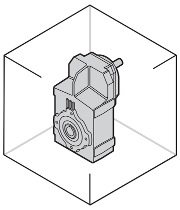
_HS

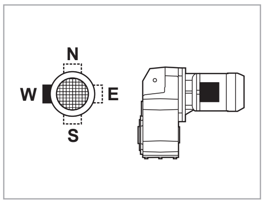

H2

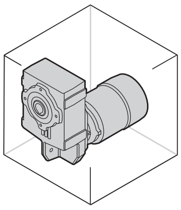
_S

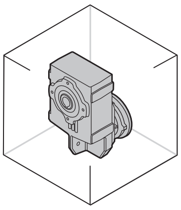
_P(IEC) **_SK / _SC**

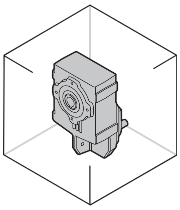
_HS

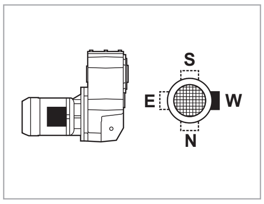

H3

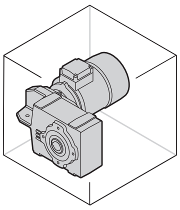
_S

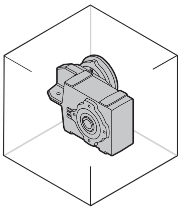
_P(IEC) **_SK / _SC**

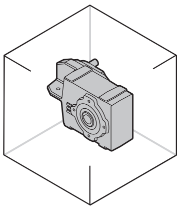
_HS

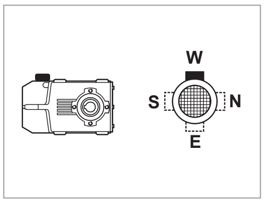

H4

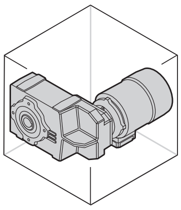
_S

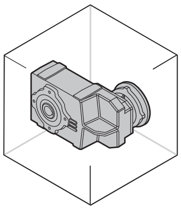
_P(IEC) **_SK / _SC**

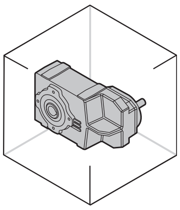
_HS

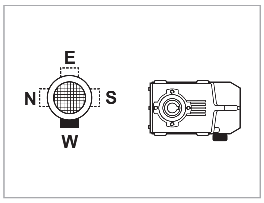

H5

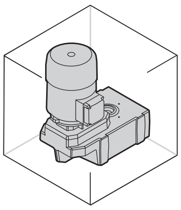
_S

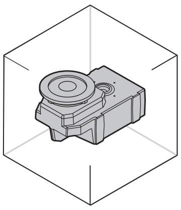
_P(IEC) **_SK / _SC**

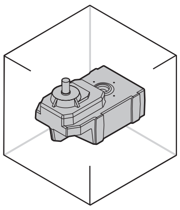
_HS

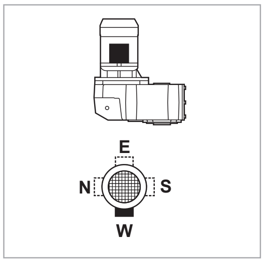

H6

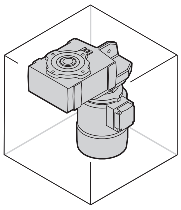
_S

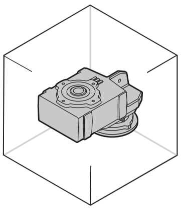
_P(IEC) **_SK / _SC**

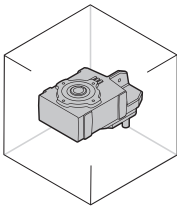
_HS

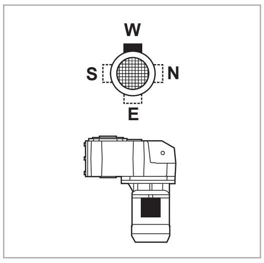

W = Default

57 RADIALKRÄFTE

Die mit den Antriebs- und/oder Abtriebswellen des Getriebes verbundenen Antriebsorgane bilden Kräfte, die in radiale Richtung auf die Welle selbst wirken.
Das Ausmaß dieser Kräfte muß mit der Festigkeit des Systems aus Getriebewelle/-lager kompatibel sein, insbesondere muß der absolute Wert der auftretenden Belastung (R_{c1} für Antriebswelle und R_{c2} für Abtriebswelle) unter dem in den Tabellen der Technischen Daten angegebenen Nennwert (R_{n1} für Antriebswelle und R_{n2} für Abtriebswelle) liegen.
In den nachstehenden Formeln bezieht sich die Angabe (1) auf die Maße der Antriebswelle, die Angabe (2) auf die Abtriebswelle.
Die von einem externen Antrieb erzeugte Kraft kann, recht genau, anhand der nachstehenden Formel berechnet werden

$$R_{c1}\left[N\right]=\frac{2000\cdot M_1\left[Nm\right]\cdot K_r}{d\left[mm\right]} \quad ; \quad R_{c2}\left[N\right]=\frac{2000\cdot M_2\left[Nm\right]\cdot K_r}{d\left[mm\right]} \qquad (35)$$

(D 52)

M_1 [Nm]	Drehmoment an der Antriebswelle
M_2 [Nm]	Drehmoment an der Abtriebswelle
d [mm]	Teilkreisdurchmesser des Bauteils, das auf der Abtriebswelle montiert ist
K_r = 1	Kettenantrieb

K_r = 1,25	Zahnradantrieb
K_r = 1,5	Antrieb über Keilriemen
K_r = 2,0	Antrieb über Flachriemen

In Abhängigkeit zum Kraftanangriffspunkt an der Welle muss die Überprüfung nach unterschiedlichen Verfahren durchgeführt werden.

(D 53)

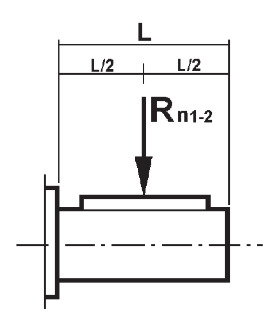

(D 54)

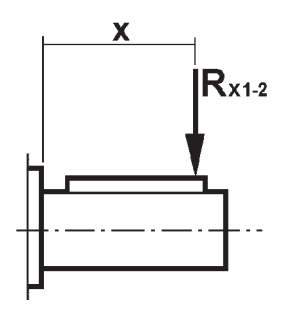

a) Kraftangriffspunkt in der Mitte, Tab. (D53)

Der zuvor errechnete Wert muß mit dem im Katalog angegebenen Nennwert verglichen werden. Es muß sich folgendes ergeben:

$Rc1 \leq Rn1$ [Antriebswelle]

oder

$Rc2 \leq Rn2$ [Abtriebswelle]

b) Von der Mitte versetzter Kraftangriffspunkt Tab. (D54)

Der auf einer Distanz “x” vom Wellenansatz liegende Kraftangriffspunkt fordert eine erneute Berechnung des für diesen Abstand zulässigen Werts.
Der neue Wert wird mit den Symbolen Rx1 (Antrieb) und Rx2 (Abtrieb) gekennzeichnet und unter Anwendung der nachstehenden Faktorenberechnung aus den Katalog- werten Rn1 und Rn2:

$$\boxed{\frac{a}{b+x}} \qquad (36)$$

(D 55)

	Getriebekonstanten					
	Abtriebswelle			Antriebswelle		
	a	**b**	**c**	**a**	**b**	**c**
F 10 2	123	100.5	450	21	1	300
F 20 2	145	115	600	40	20	350
F 20 3	145	115	600	21	1	300
F 25 2 - F 25 3	157.5	127.5	800	40	20	350
F 25 4	157.5	127.5	800	21	1	300
F 31 2 - F 31 3	165	135	850	38.5	18.5	350
F 31 4	165	135	850	21	1	300
F 41 2 - F 41 3	191.5	151.5	1000	49.5	24.5	450
F 41 4	191.5	151.5	1000	40	20	350
F 51 2 - F 51 3	233.5	183.5	1300	49.5	24.5	450
F 51 4	233.5	183.5	1300	38.5	18.5	350
F 60 3	258.5	198.5	1100	55.5	25.5	600
F 60 4	258.5	198.5	1100	49.5	24.5	450
F 70 3	342	277	1600	86	31	1000
F 70 4	342	277	1600	49.5	24.5	450
F 80 3	386.5	301.5	1800	86	31	1000
F 80 4	386.5	301.5	1800	49.5	24.5	450
F 90 3	458.5	353.5	2400	116	46	1400
F 90 4	458.5	353.5	2400	49.5	24.5	450

Das Kontrollverfahren zieht die nachstehend beschriebenen Schritte nach sich.

ANTRIESBWELLE

1. Berechnung von:

$$\boxed{R_{x1} = R_{n1} \cdot \frac{a}{b+x}} \qquad (37)$$

HINWEIS unter der Bedingung, daß:

$$\boxed{\frac{L}{2} \leq x \leq c} \qquad (38)$$

Dies als Voraussetzung, muß sich folgendes ergeben:

$$\boxed{R_{c1} \leq R_{x1}} \qquad (39)$$

ABTRIEBSWELLE

1. Berechnung von:

$$\boxed{R_{x2} = R_{n2} \cdot \frac{a}{b+x}} \qquad (40)$$

HINWEIS unter der Bedingung, daß:

$$\boxed{\frac{L}{2} \leq x \leq c} \qquad (41)$$

Dies als Voraussetzung, muß sich folgendes ergeben:

$$\boxed{R_{c2} \leq R_{x2}} \qquad (42)$$

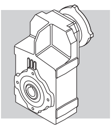

58 AXIALKRÄFTE, A_{n1}, A_{n2}

Die Werte der zulässigen, auf die Antriebswelle [A_{n1}] und auf die Abtriebswelle [A_{n2}] einwirkenden Axialkräfte können unter Bezugnahme auf den jeweiligen Wert der Radialkraft [R_{n1}] und [R_{n2}] anhand der nachstehenden Angaben berechnet werden:

$$\begin{aligned} A_{n1} &= R_{n1} \cdot 0.2 \\ A_{n2} &= R_{n2} \cdot 0.2 \end{aligned} \qquad (43)$$

Die so errechneten Werte der zulässigen Axialkräfte beziehen sich auf den Fall, in dem die Axialkräfte gleichzeitig mit den Nennradialkräften auftreten.
Nur im Fall, dass keine Radialbelastung auf die Getriebewelle wirkt, ist der Wert der zulässigen Axialbelastung [A_n] gleich 50% der zulässigen Radialbelastung [R_n] bezogen auf die gleiche Welle.
Bei sehr hohen Axialkräften oder stark erhöhten Radialkräften, wird im Hinblick auf eine genaue Kontrolle empfohlen, sich mit dem Technischen Kundendienst der Bonfiglioli Riduttori in Verbindung zu setzen.

0.09 kW

n_2 min^{-1}	M_2 Nm	S	i	R_{n2} N	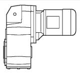		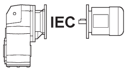	
0.40	1945	2.6	2188	35000			**F704_2188 P63 BN63A6**	453
0.50	1526	3.4	1717	35000			**F704_1717 P63 BN63A6**	453
0.62	1254	0.9	1411	8500	**F414_1411 S05 M05A6**	440	**F414_1411 P63 BN63A6**	441
0.73	1079	1.0	1213	8500	**F414_1213 S05 M05A6**	440	**F414_1213 P63 BN63A6**	441
0.81	971	1.1	1092	8500	**F414_1092 S05 M05A6**	440	**F414_1092 P63 BN63A6**	441
0.90	874	1.3	982.4	8500	**F414_982.4 S05 M05A6**	440	**F414_982.4 P63 BN63A6**	441
0.98	801	1.4	900.5	8500	**F414_900.5 S05 M05A6**	440	**F414_900.5 P63 BN63A6**	441
1.1	724	1.5	813.8	8500	**F414_813.8 S05 M05A6**	440	**F414_813.8 P63 BN63A6**	441
1.2	678	0.9	762.3	6500	**F314_762.3 S05 M05A6**	436	**F314_762.3 P63 BN63A6**	437
1.2	658	1.7	739.4	8500	**F414_739.4 S05 M05A6**	440	**F414_739.4 P63 BN63A6**	441
1.3	610	1.0	685.6	6500	**F314_685.6 S05 M05A6**	436	**F314_685.6 P63 BN63A6**	437
1.3	614	1.8	690.1	8500	**F414_690.1 S05 M05A6**	440	**F414_690.1 P63 BN63A6**	441
1.4	551	1.1	619.9	6500	**F314_619.9 S05 M05A6**	436	**F314_619.9 P63 BN63A6**	437
1.5	515	1.2	578.6	6500	**F314_578.6 S05 M05A6**	436	**F314_578.6 P63 BN63A6**	437
1.6	489	2.2	549.8	8500	**F414_549.8 S05 M05A6**	440	**F414_549.8 P63 BN63A6**	441
1.7	469	0.9	527.3	6500	**F254_527.3 S05 M05A6**	432	**F254_527.3 P63 BN63A6**	433
1.7	469	1.3	527.8	6500	**F314_527.8 S05 M05A6**	436	**F314_527.8 P63 BN63A6**	437
1.9	414	1.0	466.0	6500	**F254_466.0 S05 M05A6**	432	**F254_466.0 P63 BN63A6**	433
1.9	411	1.5	462.6	6500	**F314_462.6 S05 M05A6**	436	**F314_462.6 P63 BN63A6**	437
2.0	387	1.0	434.9	6500	**F254_434.9 S05 M05A6**	432	**F254_434.9 P63 BN63A6**	433
2.0	386	2.9	433.7	8500	**F414_433.7 S05 M05A6**	440	**F414_433.7 P63 BN63A6**	441
2.1	372	1.6	418.9	6500	**F314_418.9 S05 M05A6**	436	**F314_418.9 P63 BN63A6**	437
2.2	350	1.1	393.9	6500	**F254_393.9 S05 M05A6**	432	**F254_393.9 P63 BN63A6**	433
2.4	340	1.8	374.4	6500			**F313_374.4 P63 BN63A6**	437
2.6	302	2.0	332.8	6500			**F313_332.8 P63 BN63A6**	437
2.6	313	3.5	344.8	8500			**F413_344.8 P63 BN63A6**	441
2.8	288	0.9	316.9	4000	**F203_316.9 S05 M05A6**	428	**F203_316.9 P63 BN63A6**	429
3.0	267	2.2	293.8	6500			**F313_293.8 P63 BN63A6**	437
3.1	259	1.0	285.2	4000	**F203_285.2 S05 M05A6**	428	**F203_285.2 P63 BN63A6**	429
3.4	232	1.1	255.3	4000	**F203_255.3 S05 M05A6**	428	**F203_255.3 P63 BN63A6**	429
3.5	230	2.6	253.6	6500			**F313_253.6 P63 BN63A6**	437
3.9	207	2.9	228.2	6500			**F313_228.2 P63 BN63A6**	437
4.2	190	1.3	209.3	4000	**F203_209.3 S05 M05A6**	428	**F203_209.3 P63 BN63A6**	429
4.4	184	3.3	202.3	6500			**F313_202.3 P63 BN63A6**	437
4.8	168	1.5	184.9	4000	**F203_184.9 S05 M05A6**	428	**F203_184.9 P63 BN63A6**	429
5.1	157	1.6	172.6	4000	**F203_172.6 S05 M05A6**	428	**F203_172.6 P63 BN63A6**	429
5.6	142	1.8	156.3	4000	**F203_156.3 S05 M05A6**	428	**F203_156.3 P63 BN63A6**	429
6.7	123	2.0	132.2	4000	**F202_132.2 S05 M05A6**	428	**F202_132.2 P63 BN63A6**	429
6.9	118	1.2	127.1	2800	**F102_127.1 S05 M05A6**	424	**F102_127.1 P63 BN63A6**	425
7.7	106	2.4	114.3	4000	**F202_114.3 S05 M05A6**	428	**F202_114.3 P63 BN63A6**	429
8.3	98	1.4	106.0	2800	**F102_106.0 S05 M05A6**	424	**F102_106.0 P63 BN63A6**	425
8.7	94	2.6	101.6	4000	**F202_101.6 S05 M05A6**	428	**F202_101.6 P63 BN63A6**	429
9.6	85	1.6	91.5	2800	**F102_91.5 S05 M05A6**	424	**F102_91.5 P63 BN63A6**	425
9.7	84	3.0	90.4	4000	**F202_90.4 S05 M05A6**	428	**F202_90.4 P63 BN63A6**	429
10.8	75	1.9	81.3	2800	**F102_81.3 S05 M05A6**	424	**F102_81.3 P63 BN63A6**	425
11.5	71	3.5	76.8	4000	**F202_76.8 S05 M05A6**	428	**F202_76.8 P63 BN63A6**	429
12.4	66	2.1	71.1	2800	**F102_71.1 S05 M05A6**	424	**F102_71.1 P63 BN63A6**	425
14.0	58	2.4	63.0	2800	**F102_63.0 S05 M05A6**	424	**F102_63.0 P63 BN63A6**	425

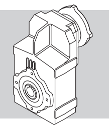

0.09 kW

n2 min-1	M2 Nm	S	i	Rn2 N	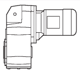		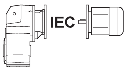	
15.5	53	2.7	56.7	2800	**F102_56.7 S05 M05A6**	424	**F102_56.7 P63 BN63A6**	425
18.1	45	3.1	48.7	2800	**F102_48.7 S05 M05A6**	424	**F102_48.7 P63 BN63A6**	425
19.7	41	3.4	44.7	2800	**F102_44.7 S05 M05A6**	424	**F102_44.7 P63 BN63A6**	425
22.2	37	3.8	39.6	2800	**F102_39.6 S05 M05A6**	424	**F102_39.6 P63 BN63A6**	425
24.9	33	4.3	35.3	2800	**F102_35.3 S05 M05A6**	424	**F102_35.3 P63 BN63A6**	425
26.7	31	4.6	33.0	2800	**F102_33.0 S05 M05A6**	424	**F102_33.0 P63 BN63A6**	425
29.7	28	5.1	29.6	2800	**F102_29.6 S05 M05A6**	424	**F102_29.6 P63 BN63A6**	425
34	24	5.9	25.8	2800	**F102_25.8 S05 M05A6**	424	**F102_25.8 P63 BN63A6**	425
39	21	6.6	22.8	2800	**F102_22.8 S05 M05A6**	424	**F102_22.8 P63 BN63A6**	425
46	18	7.8	19.3	2800	**F102_19.3 S05 M05A6**	424	**F102_19.3 P63 BN63A6**	425
52	16	8.9	17.0	2800	**F102_17.0 S05 M05A6**	424	**F102_17.0 P63 BN63A6**	425
60	14	10.1	14.6	2700	**F102_14.6 S05 M05A6**	424	**F102_14.6 P63 BN63A6**	425
68	12	10.3	13.0	2600	**F102_13.0 S05 M05A6**	424	**F102_13.0 P63 BN63A6**	425
76	11	10.3	11.5	2500	**F102_11.5 S05 M05A6**	424	**F102_11.5 P63 BN63A6**	425
90	9	11.8	9.8	2370	**F102_9.8 S05 M05A6**	424	**F102_9.8 P63 BN63A6**	425
103	8	11.8	8.6	2270	**F102_8.6 S05 M05A6**	424	**F102_8.6 P63 BN63A6**	425
119	7	13.2	7.4	2160	**F102_7.4 S05 M05A6**	424	**F102_7.4 P63 BN63A6**	425

0.12 kW

n2 min-1	M2 Nm	S	i	Rn2 N	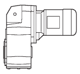		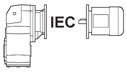	
0.40	2623	1.9	2188	35000			**F704_2188 P63 BN63B6**	453
0.51	2058	2.5	1717	35000			**F704_1717 P63 BN63B6**	453
0.60	1742	2.9	2188	35000			**F704_2188 P63 BN63A4**	453
0.65	1607	3.1	2019	35000			**F704_2019 P63 BN63A4**	453
0.76	1368	2.1	1141	20000			**F604_1141 P63 BN63B6**	449
0.89	1178	0.9	982.4	8500	**F414_982.4 S05 M05B6**	440	**F414_982.4 P63 BN63B6**	441
0.96	1090	1.0	1411	8500	**F414_1411 S05 M05A4**	440	**F414_1411 P63 BN63A4**	441
1.1	938	1.2	1213	8500	**F414_1213 S05 M05A4**	440	**F414_1213 P63 BN63A4**	441
1.2	844	1.3	1092	8500	**F414_1092 S05 M05A4**	440	**F414_1092 P63 BN63A4**	441
1.4	759	1.4	982.4	8500	**F414_982.4 S05 M05A4**	440	**F414_982.4 P63 BN63A4**	441
1.5	696	1.6	900.5	8500	**F414_900.5 S05 M05A4**	440	**F414_900.5 P63 BN63A4**	441
1.6	643	0.9	831.6	6500	**F314_831.6 S05 M05A4**	436	**F314_831.6 P63 BN63A4**	437
1.7	629	1.7	813.8	8500	**F414_813.8 S05 M05A4**	440	**F414_813.8 P63 BN63A4**	441
1.8	589	1.0	762.3	6500	**F314_762.3 S05 M05A4**	436	**F314_762.3 P63 BN63A4**	437
1.8	571	1.9	739.4	8500	**F414_739.4 S05 M05A4**	440	**F414_739.4 P63 BN63A4**	441
2.0	530	1.1	685.6	6500	**F314_685.6 S05 M05A4**	436	**F314_685.6 P63 BN63A4**	437
2.0	533	2.1	690.1	8500	**F414_690.1 S05 M05A4**	440	**F414_690.1 P63 BN63A4**	441
2.2	479	1.3	619.9	6500	**F314_619.9 S05 M05A4**	436	**F314_619.9 P63 BN63A4**	437
2.3	456	0.9	589.7	6500	**F254_589.7 S05 M05A4**	432	**F254_589.7 P63 BN63A4**	433
2.3	447	1.3	578.6	6500	**F314_578.6 S05 M05A4**	436	**F314_578.6 P63 BN63A4**	437
2.5	425	2.6	549.8	8500	**F414_549.8 S05 M05A4**	440	**F414_549.8 P63 BN63A4**	441
2.6	408	1.0	527.3	6500	**F254_527.3 S05 M05A4**	432	**F254_527.3 P63 BN63A4**	433
2.6	408	1.5	527.8	6500	**F314_527.8 S05 M05A4**	436	**F314_527.8 P63 BN63A4**	437
2.9	360	1.1	466.0	6500	**F254_466.0 S05 M05A4**	432	**F254_466.0 P63 BN63A4**	433
2.9	358	1.7	462.6	6500	**F314_462.6 S05 M05A4**	436	**F314_462.6 P63 BN63A4**	437
3.1	336	1.2	434.9	6500	**F254_434.9 S05 M05A4**	432	**F254_434.9 P63 BN63A4**	433
3.1	335	3.3	433.7	8500	**F414_433.7 S05 M05A4**	440	**F414_433.7 P63 BN63A4**	441

0.12 kW

n_2 min^{-1}	M_2 Nm	S	i	R_{n2} N			IEC	
3.2	324	1.9	418.9	6500	**F314_418.9 S05 M05A4**	436	**F314_418.9 P63 BN63A4**	437
3.4	304	1.3	393.9	6500	**F254_393.9 S05 M05A4**	432	**F254_393.9 P63 BN63A4**	433
3.6	296	2.0	374.4	6500			**F313_374.4 P63 BN63A4**	437
4.1	263	1.5	333.1	6500	**F253_333.1 S05 M05A4**	432	**F253_333.1 P63 BN63A4**	433
4.1	263	2.3	332.8	6500			**F313_332.8 P63 BN63A4**	437
4.3	250	1.0	316.9	4000	**F203_316.9 S05 M05A4**	428	**F203_316.9 P63 BN63A4**	429
4.6	232	2.6	293.8	6500			**F313_293.8 P63 BN63A4**	437
4.7	225	1.1	285.2	4000	**F203_285.2 S05 M05A4**	428	**F203_285.2 P63 BN63A4**	429
4.7	228	1.8	288.1	6500	**F253_288.1 S05 M05A4**	432	**F253_288.1 P63 BN63A4**	433
5.3	202	1.2	255.3	4000	**F203_255.3 S05 M05A4**	428	**F203_255.3 P63 BN63A4**	429
5.3	202	2.0	256.1	6500	**F253_256.1 S05 M05A4**	432	**F253_256.1 P63 BN63A4**	433
5.3	200	3.0	253.6	6500			**F313_253.6 P63 BN63A4**	437
5.9	180	2.2	227.8	6500	**F253_227.8 S05 M05A4**	432	**F253_227.8 P63 BN63A4**	433
5.9	180	3.3	228.2	6500			**F313_228.2 P63 BN63A4**	437
6.5	165	1.5	209.3	4000	**F203_209.3 S05 M05A4**	428	**F203_209.3 P63 BN63A4**	429
7.0	153	2.6	193.6	6500	**F253_193.6 S05 M05A4**	432	**F253_193.6 P63 BN63A4**	433
7.3	146	1.7	184.9	4000	**F203_184.9 S05 M05A4**	428	**F203_184.9 P63 BN63A4**	429
7.7	138	2.9	174.2	6500	**F253_174.2 S05 M05A4**	432	**F253_174.2 P63 BN63A4**	433
7.8	136	1.8	172.6	4000	**F203_172.6 S05 M05A4**	428	**F203_172.6 P63 BN63A4**	429
8.6	123	2.0	156.3	4000	**F203_156.3 S05 M05A4**	428	**F203_156.3 P63 BN63A4**	429
8.7	123	3.2	155.9	6500	**F253_155.9 S05 M05A4**	432	**F253_155.9 P63 BN63A4**	433
9.4	113	3.5	143.0	6500	**F253_143.0 S05 M05A4**	432	**F253_143.0 P63 BN63A4**	433
10.2	107	2.3	132.2	4000	**F202_132.2 S05 M05A4**	428	**F202_132.2 P63 BN63A4**	429
10.6	103	1.4	127.1	2800	**F102_127.1 S05 M05A4**	424	**F102_127.1 P63 BN63A4**	425
11.8	92	2.7	114.3	4000	**F202_114.3 S05 M05A4**	428	**F202_114.3 P63 BN63A4**	429
12.7	86	1.6	106.0	2800	**F102_106.0 S05 M05A4**	424	**F102_106.0 P63 BN63A4**	425
13.3	82	3.0	101.6	4000	**F202_101.6 S05 M05A4**	428	**F202_101.6 P63 BN63A4**	429
14.8	74	1.9	91.5	2800	**F102_91.5 S05 M05A4**	424	**F102_91.5 P63 BN63A4**	425
14.9	73	3.4	90.4	4000	**F202_90.4 S05 M05A4**	428	**F202_90.4 P63 BN63A4**	429
16.6	66	2.1	81.3	2800	**F102_81.3 S05 M05A4**	424	**F102_81.3 P63 BN63A4**	425
19.0	57	2.4	71.1	2800	**F102_71.1 S05 M05A4**	424	**F102_71.1 P63 BN63A4**	425
21.4	51	2.8	63.0	2800	**F102_63.0 S05 M05A4**	424	**F102_63.0 P63 BN63A4**	425
23.8	46	3.1	56.7	2800	**F102_56.7 S05 M05A4**	424	**F102_56.7 P63 BN63A4**	425
27.7	39	3.6	48.7	2800	**F102_48.7 S05 M05A4**	424	**F102_48.7 P63 BN63A4**	425
30	36	3.9	44.7	2800	**F102_44.7 S05 M05A4**	424	**F102_44.7 P63 BN63A4**	425
34	32	4.4	39.6	2800	**F102_39.6 S05 M05A4**	424	**F102_39.6 P63 BN63A4**	425
38	29	4.9	35.3	2800	**F102_35.3 S05 M05A4**	424	**F102_35.3 P63 BN63A4**	425
41	27	5.3	33	2800	**F102_33.0 S05 M05A4**	424	**F102_33.0 P63 BN63A4**	425
46	24	5.9	29.6	2800	**F102_29.6 S05 M05A4**	424	**F102_29.6 P63 BN63A4**	425
52	21	6.7	25.8	2800	**F102_25.8 S05 M05A4**	424	**F102_25.8 P63 BN63A4**	425
59	18	7.6	22.8	2700	**F102_22.8 S05 M05A4**	424	**F102_22.8 P63 BN63A4**	425
70	16	8.7	19.3	2560	**F102_19.3 S05 M05A4**	424	**F102_19.3 P63 BN63A4**	425
80	14	9.3	17.0	2450	**F102_17.0 S05 M05A4**	424	**F102_17.0 P63 BN63A4**	425
92	12	10.1	14.6	2340	**F102_14.6 S05 M05A4**	424	**F102_14.6 P63 BN63A4**	425
104	11	9.9	13.0	2250	**F102_13.0 S05 M05A4**	424	**F102_13.0 P63 BN63A4**	425
117	9	10.3	11.5	2160	**F102_11.5 S05 M05A4**	424	**F102_11.5 P63 BN63A4**	425
138	8	11.3	9.8	2050	**F102_9.8 S05 M05A4**	424	**F102_9.8 P63 BN63A4**	425
157	7	11.8	8.6	1970	**F102_8.6 S05 M05A4**	424	**F102_8.6 P63 BN63A4**	425
182	6	12.7	7.4	1870	**F102_7.4 S05 M05A4**	424	**F102_7.4 P63 BN63A4**	425

0.18 kW

n2 min-1	M2 Nm	S	i	Rn2 N			IEC	
0.41	3804	1.3	2188	35000	**F704_2188 S1 M1SC6**	452	**F704_2188 P71 BN71A6**	453
0.45	3511	1.4	2019	35000	**F704_2019 S1 M1SC6**	452	**F704_2019 P71 BN71A6**	453
0.45	3455	2.3	1987	45000	**F804_1987 S1 M1SC6**	455	**F804_1987 P71 BN71A6**	456
0.49	3189	2.5	1834	45000	**F804_1834 S1 M1SC6**	455	**F804_1834 P71 BN71A6**	456
0.52	2985	1.7	1717	35000	**F704_1717 S1 M1SC6**	452	**F704_1717 P71 BN71A6**	453
0.53	2972	2.7	1709	45000	**F804_1709 S1 M1SC6**	455	**F804_1709 P71 BN71A6**	456
0.57	2756	1.8	1585	35000	**F704_1585 S1 M1SC6**	452	**F704_1585 P71 BN71A6**	453
0.57	2744	2.9	1578	45000	**F804_1578 S1 M1SC6**	455	**F804_1578 P71 BN71A6**	456
0.61	2576	1.9	1481	35000	**F704_1481 S1 M1SC6**	452	**F704_1481 P71 BN71A6**	453
0.65	2406	3.3	1384	45000	**F804_1384 S1 M1SC6**	455	**F804_1384 P71 BN71A6**	456
0.66	2378	2.1	1368	35000	**F704_1368 S1 M1SC6**	452	**F704_1368 P71 BN71A6**	453
0.76	2055	2.4	1182	35000	**F704_1182 S1 M1SC6**	452	**F704_1182 P71 BN71A6**	453
0.77	2030	0.9	1168	12000	**F514_1168 S1 M1SC6**	444	**F514_1168 P71 BN71A6**	445
0.79	1985	1.5	1141	20000	**F604_1141 S1 M1SC6**	448	**F604_1141 P71 BN71A6**	449
0.83	1897	2.6	1091	35000	**F704_1091 S1 M1SC6**	452	**F704_1091 P71 BN71A6**	453
0.84	1861	1.0	1070	12000	**F514_1070 S1 M1SC6**	444	**F514_1070 P71 BN71A6**	445
0.85	1832	1.6	1054	20000	**F604_1054 S1 M1SC6**	448	**F604_1054 P71 BN71A6**	449
0.92	1703	1.1	979.4	12000	**F514_979.4 S1 M1SC6**	444	**F514_979.4 P71 BN71A6**	445
0.92	1694	3.0	974.4	35000	**F704_974.4 S1 M1SC6**	452	**F704_974.4 P71 BN71A6**	453
0.94	1667	1.7	958.9	20000	**F604_958.9 S1 M1SC6**	448	**F604_958.9 P71 BN71A6**	449
1.0	1540	1.2	885.5	12000	**F514_885.5 S1 M1SC6**	444	**F514_885.5 P71 BN71A6**	445
1.0	1539	1.9	885.1	20000	**F604_885.1 S1 M1SC6**	448	**F604_885.1 P71 BN71A6**	449
1.0	1564	3.2	899.4	35000	**F704_899.4 S1 M1SC6**	452	**F704_899.4 P71 BN71A6**	453
1.1	1437	1.3	826.4	12000	**F514_826.4 S1 M1SC6**	444	**F514_826.4 P71 BN71A6**	445
1.1	1430	3.5	822.2	35000	**F704_822.2 S1 M1SC6**	452	**F704_822.2 P71 BN71A6**	453
1.2	1286	0.9	739.4	8500	**F414_739.4 S1 M1SC6**	440	**F414_739.4 P71 BN71A6**	441
1.2	1286	0.9	739.4	8500	**F414_739.4 S1 M1SC6**	440	**F414_739.4 P71 BN71A6**	441
1.3	1200	0.9	690.1	8500	**F414_690.1 S1 M1SC6**	440	**F414_690.1 P71 BN71A6**	441
1.3	1200	0.9	690.1	8500	**F414_690.1 S1 M1SC6**	440	**F414_690.1 P71 BN71A6**	441
1.3	1165	0.9	982.4	8500	**F414_982.4 S05 M05B4**	440	**F414_982.4 P63 BN63B4**	441
1.5	1068	1.0	900.5	8500	**F414_900.5 S05 M05B4**	440	**F414_900.5 P63 BN63B4**	441
1.6	965	1.1	813.8	8500	**F414_813.8 S05 M05B4**	440	**F414_813.8 P63 BN63B4**	441
1.8	877	1.3	739.4	8500	**F414_739.4 S05 M05B4**	440	**F414_739.4 P63 BN63B4**	441
1.9	818	1.3	690.1	8500	**F414_690.1 S05 M05B4**	440	**F414_690.1 P63 BN63B4**	441
2.3	686	0.9	578.6	6500	**F314_578.6 S05 M05B4**	436	**F314_578.6 P63 BN63B4**	437
2.4	652	1.7	549.8	8500	**F414_549.8 S05 M05B4**	440	**F414_549.8 P63 BN63B4**	441
2.5	626	1.0	527.8	6500	**F314_527.8 S05 M05B4**	436	**F314_527.8 P63 BN63B4**	437
2.9	549	1.1	462.6	6500	**F314_462.6 S05 M05B4**	436	**F314_462.6 P63 BN63B4**	437
3.0	514	2.1	433.7	8500	**F414_433.7 S05 M05B4**	440	**F414_433.7 P63 BN63B4**	441
3.2	497	1.2	418.9	6500	**F314_418.9 S05 M05B4**	436	**F314_418.9 P63 BN63B4**	437
3.4	467	0.9	393.9	6500	**F254_393.9 S05 M05B4**	432	**F254_393.9 P63 BN63B4**	433
3.5	454	1.3	374.4	6500			**F313_374.4 P63 BN63B4**	437
3.8	418	2.6	344.8	8500			**F413_344.8 P63 BN63B4**	441
4.0	404	1.0	333.1	6500	**F253_333.1 S05 M05B4**	432	**F253_333.1 P63 BN63B4**	433
4.0	403	1.5	332.8	6500			**F313_332.8 P63 BN63B4**	437
4.5	356	1.7	293.8	6500			**F313_293.8 P63 BN63B4**	437
4.5	359	3.1	296.6	8500			**F413_296.6 P63 BN63B4**	441
4.6	349	1.1	288.1	6500	**F253_288.1 S05 M05B4**	432	**F253_288.1 P63 BN63B4**	433
4.9	323	3.4	266.9	8500			**F413_266.9 P63 BN63B4**	441
5.2	310	1.3	256.1	6500	**F253_256.1 S05 M05B4**	432	**F253_256.1 P63 BN63B4**	433
5.2	307	2.0	253.6	6500			**F313_253.6 P63 BN63B4**	437

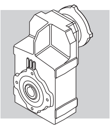

0.18 kW

n_2 min^{-1}	M_2 Nm	S	i	R_{n2} N	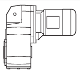		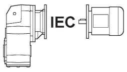	
5.8	276	1.4	227.8	6500	**F253_227.8 S05 M05B4**	432	**F253_227.8 P63 BN63B4**	433
5.8	277	2.2	228.2	6500			**F313_228.2 P63 BN63B4**	437
6.3	254	1.0	209.3	4000	**F203_209.3 S05 M05B4**	428	**F203_209.3 P63 BN63B4**	429
6.5	245	2.4	202.3	6500			**F313_202.3 P63 BN63B4**	437
6.8	235	1.7	193.6	6500	**F253_193.6 S05 M05B4**	432	**F253_193.6 P63 BN63B4**	433
7.1	224	1.1	184.9	4000	**F203_184.9 S05 M05B4**	428	**F203_184.9 P63 BN63B4**	429
7.1	225	2.7	185.4	6500			**F313_185.4 P63 BN63B4**	437
7.6	209	1.2	172.6	4000	**F203_172.6 S05 M05B4**	428	**F203_172.6 P63 BN63B4**	429
7.6	211	1.9	174.2	6500	**F253_174.2 S05 M05B4**	432	**F253_174.2 P63 BN63B4**	433
7.9	202	3.0	166.8	6500			**F313_166.8 P63 BN63B4**	437
8.4	189	1.3	156.3	4000	**F203_156.3 S05 M05B4**	428	**F203_156.3 P63 BN63B4**	429
8.5	189	2.1	155.9	6500	**F253_155.9 S05 M05B4**	432	**F253_155.9 P63 BN63B4**	433
8.8	183	3.3	150.8	6500			**F313_150.8 P63 BN63B4**	437
9.2	173	2.3	143.0	6500	**F253_143.0 S05 M05B4**	432	**F253_143.0 P63 BN63B4**	433
9.4	171	3.5	140.7	6500			**F313_140.7 P63 BN63B4**	437
10.0	164	1.5	132.2	4000	**F202_132.2 S05 M05B4**	428	**F202_132.2 P63 BN63B4**	429
10.3	155	2.6	127.8	6500	**F253_127.8 S05 M05B4**	432	**F253_127.8 P63 BN63B4**	433
10.4	157	0.9	127.1	2800	**F102_127.1 S05 M05B4**	424	**F102_127.1 P63 BN63B4**	425
11.5	142	1.8	114.3	4000	**F202_114.3 S05 M05B4**	428	**F202_114.3 P63 BN63B4**	429
11.7	137	2.9	113.0	6500	**F253_113.0 S05 M05B4**	432	**F253_113.0 P63 BN63B4**	433
12.5	131	1.1	106.0	2800	**F102_106.0 S05 M05B4**	424	**F102_106.0 P63 BN63B4**	425
12.5	128	3.1	105.4	6500	**F253_105.4 S05 M05B4**	432	**F253_105.4 P63 BN63B4**	433
13.0	126	2.0	101.6	4000	**F202_101.6 S05 M05B4**	428	**F202_101.6 P63 BN63B4**	429
13.8	116	3.5	95.5	6500	**F253_95.5 S05 M05B4**	432	**F253_95.5 P63 BN63B4**	433
14.4	113	1.2	91.5	2800	**F102_91.5 S05 M05B4**	424	**F102_91.5 P63 BN63B4**	425
14.6	112	2.2	90.4	4000	**F202_90.4 S05 M05B4**	428	**F202_90.4 P63 BN63B4**	429
16.2	101	1.4	81.3	2800	**F102_81.3 S05 M05B4**	424	**F102_81.3 P63 BN63B4**	425
17.2	95	2.6	76.8	4000	**F202_76.8 S05 M05B4**	428	**F202_76.8 P63 BN63B4**	429
18.6	88	1.6	71.1	2800	**F102_71.1 S05 M05B4**	424	**F102_71.1 P63 BN63B4**	425
19.1	86	2.9	69.1	4000	**F202_69.1 S05 M05B4**	428	**F202_69.1 P63 BN63B4**	429
21.0	78	1.8	63.0	2800	**F102_63.0 S05 M05B4**	424	**F102_63.0 P63 BN63B4**	425
21.3	77	3.3	61.9	4000	**F202_61.9 S05 M05B4**	428	**F202_61.9 P63 BN63B4**	429
23.3	70	2.0	56.7	2800	**F102_56.7 S05 M05B4**	424	**F102_56.7 P63 BN63B4**	425
27.1	60	2.3	48.7	2800	**F102_48.7 S05 M05B4**	424	**F102_48.7 P63 BN63B4**	425
29.6	55	2.5	44.7	2800	**F102_44.7 S05 M05B4**	424	**F102_44.7 P63 BN63B4**	425
33	49	2.9	39.6	2800	**F102_39.6 S05 M05B4**	424	**F102_39.6 P63 BN63B4**	425
37	44	3.2	35.3	2800	**F102_35.3 S05 M05B4**	424	**F102_35.3 P63 BN63B4**	425
40	41	3.4	33.0	2800	**F102_33.0 S05 M05B4**	424	**F102_33.0 P63 BN63B4**	425
45	37	3.8	29.6	2800	**F102_29.6 S05 M05B4**	424	**F102_29.6 P63 BN63B4**	425
51	32	4.4	25.8	2780	**F102_25.8 S05 M05B4**	424	**F102_25.8 P63 BN63B4**	425
58	28	5.0	22.8	2680	**F102_22.8 S05 M05B4**	424	**F102_22.8 P63 BN63B4**	425
68	24	5.7	19.3	2540	**F102_19.3 S05 M05B4**	424	**F102_19.3 P63 BN63B4**	425
78	21	6.1	17.0	2440	**F102_17.0 S05 M05B4**	424	**F102_17.0 P63 BN63B4**	425
90	18	6.6	14.6	2330	**F102_14.6 S05 M05B4**	424	**F102_14.6 P63 BN63B4**	425
101	16	6.4	13.0	2240	**F102_13.0 S05 M05B4**	424	**F102_13.0 P63 BN63B4**	425
114	14	6.7	11.5	2150	**F102_11.5 S05 M05B4**	424	**F102_11.5 P63 BN63B4**	425
135	12	7.4	9.8	2040	**F102_9.8 S05 M05B4**	424	**F102_9.8 P63 BN63B4**	425
154	11	7.7	8.6	1960	**F102_8.6 S05 M05B4**	424	**F102_8.6 P63 BN63B4**	425
178	9	8.3	7.4	1870	**F102_7.4 S05 M05B4**	424	**F102_7.4 P63 BN63B4**	425
186	9	10.7	14.6	1860	**F102_14.6 S05 M05A2**	424	**F102_14.6 P63 BN63A2**	425
210	8	10.9	13.0	1790	**F102_13.0 S05 M05A2**	424	**F102_13.0 P63 BN63A2**	425

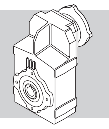

0.18 kW

n_2 min-1	M_2 Nm	S	i	R_{n2} N			IEC	
237	7	11.3	11.5	1720	**F102_11.5 S05 M05A2**	424	**F102_11.5 P63 BN63A2**	425
279	6	12.5	9.8	1630	**F102_9.8 S05 M05A2**	424	**F102_9.8 P63 BN63A2**	425
318	5	13.0	8.6	1560	**F102_8.6 S05 M05A2**	424	**F102_8.6 P63 BN63A2**	425
369	4	14.2	7.4	1490	**F102_7.4 S05 M05A2**	424	**F102_7.4 P63 BN63A2**	425

0.25 kW

n_2 min-1	M_2 Nm	S	i	R_{n2} N			IEC	
0.41	5283	0.9	2188	35000	**F704_2188 S1 M1SD6**	452	**F704_2188 P71 BN71B6**	453
0.45	4877	1.0	2019	35000	**F704_2019 S1 M1SD6**	452	**F704_2019 P71 BN71B6**	453
0.45	4799	1.7	1987	45000	**F804_1987 S1 M1SD6**	455	**F804_1987 P71 BN71B6**	456
0.49	4430	1.8	1834	45000	**F804_1834 S1 M1SD6**	455	**F804_1834 P71 BN71B6**	456
0.52	4146	1.2	1717	35000	**F704_1717 S1 M1SD6**	452	**F704_1717 P71 BN71B6**	453
0.53	4128	1.9	1709	45000	**F804_1709 S1 M1SD6**	455	**F804_1709 P71 BN71B6**	456
0.57	3827	1.3	1585	35000	**F704_1585 S1 M1SD6**	452	**F704_1585 P71 BN71B6**	453
0.57	3810	2.1	1578	45000	**F804_1578 S1 M1SD6**	455	**F804_1578 P71 BN71B6**	456
0.61	3578	1.4	1481	35000	**F704_1481 S1 M1SD6**	452	**F704_1481 P71 BN71B6**	453
0.65	3342	2.4	1384	45000	**F804_1384 S1 M1SD6**	455	**F804_1384 P71 BN71B6**	456
0.66	3303	1.5	1368	35000	**F704_1368 S1 M1SD6**	452	**F704_1368 P71 BN71B6**	453
0.70	3085	2.6	1277	45000	**F804_1277 S1 M1SD6**	455	**F804_1277 P71 BN71B6**	456
0.76	2854	1.8	1182	35000	**F704_1182 S1 M1SD6**	452	**F704_1182 P71 BN71B6**	453
0.79	2757	1.1	1141	20000	**F604_1141 S1 M1SD6**	448	**F604_1141 P71 BN71B6**	449
0.79	2769	2.9	1146	45000	**F804_1146 S1 M1SD6**	455	**F804_1146 P71 BN71B6**	456
0.83	2635	1.9	1091	35000	**F704_1091 S1 M1SD6**	452	**F704_1091 P71 BN71B6**	453
0.85	2545	1.1	1054	20000	**F604_1054 S1 M1SD6**	448	**F604_1054 P71 BN71B6**	449
0.85	2556	3.1	1058	45000	**F804_1058 S1 M1SD6**	455	**F804_1058 P71 BN71B6**	456
0.92	2353	2.1	974.4	35000	**F704_974.4 S1 M1SD6**	452	**F704_974.4 P71 BN71B6**	453
0.94	2316	1.3	958.9	20000	**F604_958.9 S1 M1SD6**	448	**F604_958.9 P71 BN71B6**	449
1.0	2138	1.4	885.1	20000	**F604_885.1 S1 M1SD6**	448	**F604_885.1 P71 BN71B6**	449
1.0	2172	2.3	899.4	35000	**F704_899.4 S1 M1SD6**	452	**F704_899.4 P71 BN71B6**	453
1.1	1996	0.9	826.4	12000	**F514_826.4 S1 M1SD6**	444	**F514_826.4 P71 BN71B6**	445
1.1	1986	2.5	822.2	35000	**F704_822.2 S1 M1SD6**	452	**F704_822.2 P71 BN71B6**	453
1.3	1633	1.1	676.3	12000	**F514_676.3 S1 M1SD6**	444	**F514_676.3 P71 BN71B6**	445
1.4	1600	1.8	662.4	20000	**F604_662.4 S1 M1SD6**	448	**F604_662.4 P71 BN71B6**	449
1.4	1588	3.1	657.4	35000	**F704_657.4 S1 M1SD6**	452	**F704_657.4 P71 BN71B6**	453
1.5	1477	2.0	611.4	20000	**F604_611.4 S1 M1SD6**	448	**F604_611.4 P71 BN71B6**	449
1.5	1466	3.4	606.8	35000	**F704_606.8 S1 M1SD6**	452	**F704_606.8 P71 BN71B6**	453
1.7	1282	0.9	813.8	8500	**F414_813.8 S05 M05C4**	440	**F414_813.8 P71 BN71A4**	441
1.8	1199	0.9	739.4	8500	**F414_739.4 S05 M05C4**	440	**F414_739.4 P71 BN71A4**	441
1.9	1119	1.0	690.1	8500	**F414_690.1 S05 M05C4**	440	**F414_690.1 P71 BN71A4**	441
2.4	892	1.2	549.8	8500	**F414_549.8 S05 M05C4**	440	**F414_549.8 P7 1 BN71A4**	441
2.8	783	2.3	317.3	12000	**F513_317.3 S1 M1SD6**	444	**F513_317.3 P71 BN71B6**	445
3.1	704	1.6	433.7	8500	**F414_433.7 S05 M05C4**	440	**F414_433.7 P71 BN71A4**	441
3.2	679	0.9	418.9	6500	**F314_418.9 S05 M05C4**	436	**F314_418.9 P71 BN71A4**	437
3.7	603	1.0	374.4	6500			**F313_374.4 P71 BN71A4**	437
4.0	555	2.0	344.8	8500			**F413_344.8 P71 BN71A4**	441
4.1	536	1.1	332.8	6500			**F313_332.8 P71 BN71A4**	437
4.7	473	1.3	293.8	6500			**F313_293.8 P71 BN71A4**	437

0.25 kW

n2 min-1	M2 Nm	S	i	Rn2 N	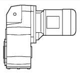		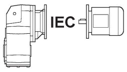	
4.7	477	2.3	296.6	8500			**F413_296.6 P71 BN71A4**	441
5.2	425	0.9	256.1	6500	**F253_256.1 S05 M05C4**	432	**F253_256.1 P71 BN71A4**	433
5.2	430	2.6	266.9	8500			**F413_266.9 P71 BN71A4**	441
5.4	408	1.5	253.6	6500			**F313_253.6 P71 BN71A4**	437
5.7	387	2.8	240.1	8500			**F413_240.1 P71 BN71A4**	441
5.9	378	1.1	227.8	6500	**F253_227.8 S05 M05C4**	432	**F253_227.8 P71 BN71A4**	433
6.0	367	1.6	228.2	6500			**F313_228.2 P71 BN71A4**	437
6.3	354	3.1	220.1	8500			**F413_220.1 P71 BN71A4**	441
6.8	326	1.8	202.3	6500			**F313_202.3 P71 BN71A4**	437
6.9	321	1.2	193.6	6500	**F253_193.6 S05 M05C4**	432	**F253_193.6 P71 BN71A4**	433
6.9	320	3.4	198.9	8500			**F413_198.9 P71 BN71A4**	441
7.4	299	2.0	185.4	6500			**F313_185.4 P71 BN71A4**	437
7.7	289	1.4	174.2	6500	**F253_174.2 S05 M05C4**	432	**F253_174.2 P71 BN71A4**	433
8.0	278	0.9	172.6	4000	**F203_172.6 S05 M05C4**	428	**F203_172.6 P71 BN71A4**	429
8.3	268	2.2	166.8	6500			**F313_166.8 P71 BN71A4**	437
8.6	259	1.0	156.3	4000	**F203_156.3 S05 M05C4**	428	**F203_156.3 P71 BN71A4**	429
8.6	259	1.5	155.9	6500	**F253_155.9 S05 M05C4**	432	**F253_155.9 P71 BN71A4**	433
9.2	243	2.5	150.8	6500			**F313_150.8 P71 BN71A4**	437
9.7	230	1.7	143.0	6500	**F253_143.0 S05 M05C4**	432	**F253_143.0 P71 BN71A4**	433
9.8	227	2.6	140.7	6500			**F313_140.7 P71 BN71A4**	437
10.1	224	1.1	132.2	4000	**F202_132.2 S05 M05C4**	428	**F202_132.2 P71 BN71A4**	429
10.5	212	1.9	127.8	6500	**F253_127.8 S05 M05C4**	432	**F253_127.8 P71 BN71A4**	433
10.7	207	2.9	128.4	6500			**F313_128.4 P71 BN71A4**	437
11.7	194	1.3	114.3	4000	**F202_114.3 S05 M05C4**	428	**F202_114.3 P71 BN71A4**	429
12.2	182	2.2	113.0	6500	**F253_113.0 S05 M05C4**	432	**F253_113.0 P71 BN71A4**	433
12.3	181	3.3	112.5	6500			**F313_112.5 P71 BN71A4**	437
12.7	175	2.3	105.4	6500	**F253_105.4 S05 M05C4**	432	**F253_105.4 P71 BN71A4**	433
13.2	172	1.5	101.6	4000	**F202_101.6 S05 M05C4**	428	**F202_101.6 P71 BN71A4**	429
14.0	158	2.5	95.5	6500	**F253_95.5 S05 M05C4**	432	**F253_95.5 P71 BN71A4**	433
14.6	155	0.9	91.5	2800	**F102_91.5 S05 M05C4**	424	**F102_91.5 P71 BN71A4**	425
14.8	153	1.6	90.4	4000	**F202_90.4 S05 M05C4**	428	**F202_90.4 P71 BN71A4**	429
16.1	138	2.9	83.4	6500	**F253_83.4 S05 M05C4**	432	**F253_83.4 P71 BN71A4**	433
16.5	138	1.0	81.3	2800	**F102_81.3 S05 M05C4**	424	**F102_81.3 P71 BN71A4**	425
17.4	130	1.9	76.8	4000	**F202_76.8 S05 M05C4**	428	**F202_76.8 P71 BN71A4**	429
17.5	127	3.2	76.6	6420	**F253_76.6 S05 M05C4**	432	**F253_76.6 P71 BN71A4**	433
18.8	120	1.2	71.1	2800	**F102_71.1 S05 M05C4**	424	**F102_71.1 P71 BN71A4**	425
19.4	117	2.1	69.1	4000	**F202_69.1 S05 M05C4**	428	**F202_69.1 P71 BN71A4**	429
21.3	107	1.3	63.0	2800	**F102_63.0 S05 M05C4**	424	**F102_63.0 P71 BN71A4**	425
21.7	105	2.4	61.9	4000	**F202_61.9 S05 M05C4**	428	**F202_61.9 P71 BN71A4**	429
23.6	96	1.5	56.7	2800	**F102_56.7 S05 M05C4**	424	**F102_56.7 P71 BN71A4**	425
23.6	96	2.6	56.7	4000	**F202_56.7 S05 M05C4**	428	**F202_56.7 P71 BN71A4**	429
26.4	86	2.9	50.7	4000	**F202_50.7 S05 M05C4**	428	**F202_50.7 P71 BN71A4**	429
27.5	83	1.7	48.7	2800	**F102_48.7 S05 M05C4**	424	**F102_48.7 P71 BN71A4**	425
29.9	76	3.3	44.8	3870	**F202_44.8 S05 M05C4**	428	**F202_44.8 P71 BN71A4**	429
30.0	76	1.9	44.7	2800	**F102_44.7 S05 M05C4**	424	**F102_44.7 P71 BN71A4**	425
34	67	2.1	39.6	2800	**F102_39.6 S05 M05C4**	424	**F102_39.6 P71 BN71A4**	425
38	60	2.3	35.3	2800	**F102_35.3 S05 M05C4**	424	**F102_35.3 P71 BN71A4**	425
41	56	2.5	33.0	2800	**F102_33.0 S05 M05C4**	424	**F102_33.0 P71 BN71A4**	425
45	50	2.8	29.6	2800	**F102_29.6 S05 M05C4**	424	**F102_29.6 P71 BN71A4**	425
52	44	3.2	25.8	2750	**F102_25.8 S05 M05C4**	424	**F102_25.8 P71 BN71A4**	425
59	39	3.6	22.8	2650	**F102_22.8 S05 M05C4**	424	**F102_22.8 P71 BN71A4**	425

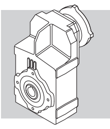

0.25 kW

n_2 min^{-1}	M_2 Nm	S	i	R_{n2} N				
69	33	4.2	19.3	2520	**F102_19.3 S05 M05C4**	424	**F102_19.3 P71 BN71A4**	425
81	28	4.6	17.0	2420	**F102_17.0 S05 M05C4**	424	**F102_17.0 P71 BN71A4**	425
91	25	4.8	14.6	2310	**F102_14.6 S05 M05C4**	424	**F102_14.6 P71 BN71A4**	425
103	22	4.7	13.0	2230	**F102_13.0 S05 M05C4**	424	**F102_13.0 P71 BN71A4**	425
120	19	5.1	11.5	2140	**F102_11.5 S05 M05C4**	424	**F102_11.5 P71 BN71A4**	425
137	17	5.4	9.8	2030	**F102_9.8 S05 M05C4**	424	**F102_9.8 P71 BN71A4**	425
161	14	5.8	8.6	1950	**F102_8.6 S05 M05C4**	424	**F102_8.6 P71 BN71A4**	425
181	13	6.1	7.4	1860	**F102_7.4 S05 M05C4**	424	**F102_7.4 P71 BN71A4**	425
187	12	7.7	14.6	1850	**F102_14.6 S05 M05B2**	424	**F102_14.6 P63 BN63B2**	425
210	11	7.9	13.0	1780	**F102_13.0 S05 M05B2**	424	**F102_13.0 P63 BN63B2**	425
237	10	8.2	11.5	1710	**F102_11.5 S05 M05B2**	424	**F102_11.5 P63 BN63B2**	425
280	8	9.0	9.8	1620	**F102_9.8 S05 M05B2**	424	**F102_9.8 P63 BN63B2**	425
319	7	9.4	8.6	1550	**F102_8.6 S05 M05B2**	424	**F102_8.6 P63 BN63B2**	425
370	6	10.3	7.4	1480	**F102_7.4 S05 M05B2**	424	**F102_7.4 P63 BN63B2**	425

0.37 kW

n_2 min^{-1}	M_2 Nm	S	i	R_{n2} N				
0.46	7024	1.1	1987	45000	**F804_1987 S1 M1LA6**	455	**F804_1987 P80 BN80A6**	456
0.50	6484	1.2	1834	45000	**F804_1834 S1 M1LA6**	455	**F804_1834 P80 BN80A6**	456
0.53	6042	1.3	1709	45000	**F804_1709 S1 M1LA6**	455	**F804_1709 P80 BN80A6**	456
0.57	5602	0.9	1585	35000	**F704_1585 S1 M1LA6**	452	**F704_1585 P80 BN80A6**	453
0.58	5577	1.4	1578	45000	**F804_1578 S1 M1LA6**	455	**F804_1578 P80 BN80A6**	456
0.61	5238	1.0	1481	35000	**F704_1481 S1 M1LA6**	452	**F704_1481 P80 BN80A6**	453
0.63	5137	1.0	2188	35000	**F704_2188 S1 M1SD4**	452	**F704_2188 P71 BN71B4**	453
0.68	4742	1.1	2019	35000	**F704_2019 S1 M1SD4**	452	**F704_2019 P71 BN71B4**	453
0.69	4666	1.7	1987	45000	**F804_1987 S1 M1SD4**	455	**F804_1987 P71 BN71B4**	456
0.75	4307	1.9	1834	45000	**F804_1834 S1 M1SD4**	455	**F804_1834 P71 BN71B4**	456
0.80	4031	1.2	1717	35000	**F704_1717 S1 M1SD4**	452	**F704_1717 P71 BN71B4**	453
0.80	4013	2.0	1709	45000	**F804_1709 S1 M1SD4**	455	**F804_1709 P71 BN71B4**	456
0.86	3721	1.3	1585	35000	**F704_1585 S1 M1SD4**	452	**F704_1585 P71 BN71B4**	453
0.87	3705	2.2	1578	45000	**F804_1578 S1 M1SD4**	455	**F804_1578 P71 BN71B4**	456
0.92	3479	1.4	1481	35000	**F704_1481 S1 M1SD4**	452	**F704_1481 P71 BN71B4**	453
0.99	3250	2.5	1384	45000	**F804_1384 S1 M1SD4**	455	**F804_1384 P71 BN71B4**	456
1.0	3211	1.6	1368	35000	**F704_1368 S1 M1SD4**	452	**F704_1368 P71 BN71B4**	453
1.1	3000	2.7	1277	45000	**F804_1277 S1 M1SD4**	455	**F804_1277 P71 BN71B4**	456
1.2	2680	1.1	1141	20000	**F604_1141 S1 M1SD4**	448	**F604_1141 P71 BN71B4**	449
1.2	2775	1.8	1182	35000	**F704_1182 S1 M1SD4**	452	**F704_1182 P71 BN71B4**	453
1.2	2692	3.0	1146	45000	**F804_1146 S1 M1SD4**	455	**F804_1146 P71 BN71B4**	456
1.3	2474	1.2	1054	20000	**F604_1054 S1 M1SD4**	448	**F604_1054 P71 BN71B4**	449
1.3	2562	2.0	1091	35000	**F704_1091 S1 M1SD4**	452	**F704_1091 P71 BN71B4**	453
1.3	2485	3.2	1058	45000	**F804_1058 S1 M1SD4**	455	**F804_1058 P71 BN71B4**	456
1.4	2252	1.3	958.9	20000	**F604_958.9 S1 M1SD4**	448	**F604_958.9 P71 BN71B4**	449
1.4	2288	2.2	974.4	35000	**F704_974.4 S1 M1SD4**	452	**F704_974.4 P71 BN71B4**	453
1.5	2079	0.9	885.5	12000	**F514_885.5 S1 M1SD4**	444	**F514_885.5 P71 BN71B4**	445
1.5	2078	1.4	885.1	20000	**F604_885.1 S1 M1SD4**	448	**F604_885.1 P71 BN71B4**	449
1.5	2112	2.4	899.4	35000	**F704_899.4 S1 M1SD4**	452	**F704_899.4 P71 BN71B4**	453
1.7	1941	0.9	826.4	12000	**F514_826.4 S1 M1SD4**	444	**F514_826.4 P71 BN71B4**	445

0.37 kW

n_2 min-1	M_2 Nm	S	i	R_{n2} N			IEC	
1.7	1931	2.6	822.2	35000	**F704_822.2 S1 M1SD4**	452	**F704_822.2 P71 BN71B4**	453
2.0	1588	1.1	676.3	12000	**F514_676.3 S1 M1SD4**	444	**F514_676.3 P71 BN71B4**	445
2.1	1556	1.9	662.4	20000	**F604_662.4 S1 M1SD4**	448	**F604_662.4 P71 BN71B4**	449
2.1	1544	3.2	657.4	35000	**F704_657.4 S1 M1SD4**	452	**F704_657.4 P71 BN71B4**	453
2.2	1436	2.0	611.4	20000	**F604_611.4 S1 M1SD4**	448	**F604_611.4 P71 BN71B4**	449
2.3	1425	3.5	606.8	35000	**F704_606.8 S1 M1SD4**	452	**F704_606.8 P71 BN71B4**	453
2.5	1291	0.9	549.8	8500	**F414_549.8 S1 M1SD4**	440	**F414_549.8 P71 BN71B4**	441
2.6	1246	1.4	530.5	12000	**F514_530.5 S1 M1SD4**	444	**F514_530.5 P71 BN71B4**	445
2.6	1246	2.3	530.7	20000	**F604_530.7 S1 M1SD4**	448	**F604_530.7 P71 BN71B4**	449
2.8	1150	2.5	489.8	20000	**F604_489.8 S1 M1SD4**	448	**F604_489.8 P71 BN71B4**	449
3.2	1018	1.1	433.7	8500	**F414_433.7 S1 M1SD4**	440	**F414_433.7 P71 BN71B4**	441
3.2	1008	1.8	429.1	12000	**F514_429.1 S1 M1SD4**	444	**F514_429.1 P71 BN71B4**	445
3.2	1016	2.9	432.6	20000	**F604_432.6 S1 M1SD4**	448	**F604_432.6 P71 BN71B4**	449
3.4	938	3.1	399.3	20000	**F604_399.3 S1 M1SD4**	448	**F604_399.3 P71 BN71B4**	449
3.9	846	2.1	352.5	12000	**F513_352.5 S1 M1SD4**	444	**F513_352.5 P71 BN71B4**	445
4.0	827	1.3	344.8	8500	**F413_344.8 S1 M1SD4**	440	**F413_344.8 P71 BN71B4**	441
4.3	761	2.4	317.3	12000	**F513_317.3 S1 M1SD4**	444	**F513_317.3 P71 BN71B4**	445
4.6	712	1.5	296.6	8500	**F413_296.6 S1 M1SD4**	440	**F413_296.6 P71 BN71B4**	441
4.8	686	2.6	285.9	12000	**F513_285.9 S1 M1SD4**	444	**F513_285.9 P71 BN71B4**	445
5.1	641	1.7	266.9	8500	**F413_266.9 S1 M1SD4**	440	**F413_266.9 P71 BN71B4**	441
5.2	629	2.9	262.1	12000	**F513_262.1 S1 M1SD4**	444	**F513_262.1 P71 BN71B4**	445
5.4	609	1.0	253.6	6500	**F313_253.6 S1 M1SD4**	436	**F313_253.6 P71 BN71B4**	437
5.7	576	1.9	240.1	8500	**F413_240.1 S1 M1SD4**	440	**F413_240.1 P71 BN71B4**	441
5.7	576	3.1	239.8	12000	**F513_239.8 S1 M1SD4**	444	**F513_239.8 P71 BN71B4**	445
6.0	548	1.1	228.2	6500	**F313_228.2 S1 M1SD4**	436	**F313_228.2 P71 BN71B4**	437
6.2	528	2.1	220.1	8500	**F413_220.1 S1 M1SD4**	440	**F413_220.1 P71 BN71B4**	441
6.3	520	3.5	216.9	12000	**F513_216.9 S1 M1SD4**	444	**F513_216.9 P71 BN71B4**	445
6.8	485	1.2	202.3	6500	**F313_202.3 S1 M1SD4**	436	**F313_202.3 P71 BN71B4**	437
6.9	477	2.3	198.9	8500	**F413_198.9 S1 M1SD4**	440	**F413_198.9 P71 BN71B4**	441
7.4	445	1.3	185.4	6500	**F313_185.4 S1 M1SD4**	436	**F313_185.4 P71 BN71B4**	437
7.6	434	2.5	180.7	8500	**F413_180.7 S1 M1SD4**	440	**F413_180.7 P71 BN71B4**	441
7.9	418	1.0	174.2	6500	**F253_174.2 S1 M1SD4**	432	**F253_174.2 P71 BN71B4**	433
8.1	405	2.7	168.7	8500	**F413_168.7 S1 M1SD4**	440	**F413_168.7 P71 BN71B4**	441
8.2	400	1.5	166.8	6500	**F313_166.8 S1 M1SD4**	436	**F313_166.8 P71 BN71B4**	437
8.8	374	1.1	155.9	6500	**F253_155.9 S1 M1SD4**	432	**F253_155.9 P71 BN71B4**	433
9.1	362	1.7	150.8	6500	**F313_150.8 S1 M1SD4**	436	**F313_150.8 P71 BN71B4**	437
9.6	343	1.2	143.0	6500	**F253_143.0 S1 M1SD4**	432	**F253_143.0 P71 BN71B4**	433
9.7	338	1.8	140.7	6500	**F313_140.7 S1 M1SD4**	436	**F313_140.7 P71 BN71B4**	437
10.2	323	3.4	134.4	8500	**F413_134.4 S1 M1SD4**	440	**F413_134.4 P71 BN71B4**	441
10.7	307	1.3	127.8	6500	**F253_127.8 S1 M1SD4**	432	**F253_127.8 P71 BN71B4**	433
10.7	308	1.9	128.4	6500	**F313_128.4 S1 M1SD4**	436	**F313_128.4 P71 BN71B4**	437
12.1	271	1.5	113.0	6500	**F253_113.0 S1 M1SD4**	432	**F253_113.0 P71 BN71B4**	433
12.2	270	2.2	112.5	6500	**F313_112.5 S1 M1SD4**	436	**F313_112.5 P71 BN71B4**	437
13.0	253	1.6	105.4	6500	**F253_105.4 S1 M1SD4**	432	**F253_105.4 P71 BN71B4**	433
13.4	245	2.5	101.9	6500	**F313_101.9 S1 M1SD4**	436	**F313_101.9 P71 BN71B4**	437
13.5	249	1.0	101.6	4000			**F202_101.6 P71 BN71B4**	429
14.3	229	1.7	95.5	6490	**F253_95.5 S1 M1SD4**	432	**F253_95.5 P71 BN71B4**	433
15.2	222	1.1	90.4	4000	**F202_90.4 S1 M1SD4**	428	**F202_90.4 P71 BN71B4**	429
15.7	210	2.9	87.4	6500	**F313_87.4 S1 M1SD4**	436	**F313_87.4 P71 BN71B4**	437
16.4	200	2.0	83.4	6280	**F253_83.4 S1 M1SD4**	432	**F253_83.4 P71 BN71B4**	433
17.4	189	3.2	78.9	6500	**F313_78.9 S1 M1SD4**	436	**F313_78.9 P71 BN71B4**	437

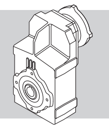

0.37 kW

n2 min-1	M2 Nm	S	i	Rn2 N			IEC	
17.8	188	1.3	76.8	4000	**F202_76.8 S1 M1SD4**	428	**F202_76.8 P71 BN71B4**	429
17.9	184	2.2	76.6	6160	**F253_76.6 S1 M1SD4**	432	**F253_76.6 P71 BN71B4**	433
19.8	169	1.5	69.1	4000	**F202_69.1 S1 M1SD4**	428	**F202_69.1 P71 BN71B4**	429
21.0	157	2.6	65.3	5920	**F253_65.3 S1 M1SD4**	432	**F253_65.3 P71 BN71B4**	433
21.7	154	0.9	63.0	2800	**F102_63.0 S1 M1SD4**	424	**F102_63.0 P71 BN71B4**	425
22.1	152	1.6	61.9	4000	**F202_61.9 S1 M1SD4**	428	**F202_61.9 P71 BN71B4**	429
23.5	140	2.9	58.3	5750	**F253_58.3 S1 M1SD4**	432	**F253_58.3 P71 BN71B4**	433
24.2	139	1.0	56.7	2800	**F102_56.7 S1 M1SD4**	424	**F102_56.7 P71 BN71B4**	425
24.2	139	1.8	56.7	4000	**F202_56.7 S1 M1SD4**	428	**F202_56.7 P71 BN71B4**	429
27.0	124	2.0	50.7	3900	**F202_50.7 S1 M1SD4**	428	**F202_50.7 P71 BN71B4**	429
27.0	122	3.3	50.8	5540	**F253_50.8 S1 M1SD4**	432	**F253_50.8 P71 BN71B4**	433
28.1	119	1.2	48.7	2800	**F102_48.7 S1 M1SD4**	424	**F102_48.7 P71 BN71B4**	425
31	110	1.3	44.7	2800	**F102_44.7 S1 M1SD4**	424	**F102_44.7 P71 BN71B4**	425
31	110	2.3	44.8	3770	**F202_44.8 S1 M1SD4**	428	**F202_44.8 P71 BN71B4**	429
31	109	3.5	44.4	5370	**F252_44.4 S1 M1SD4**	432	**F252_44.4 P71 BN71B4**	433
33	103	2.4	41.8	3700	**F202_41.8 S1 M1SD4**	428	**F202_41.8 P71 BN71B4**	429
35	97	1.4	39.6	2800	**F102_39.6 S1 M1SD4**	424	**F102_39.6 P71 BN71B4**	425
36	93	2.7	37.9	3600	**F202_37.9 S1 M1SD4**	428	**F202_37.9 P71 BN71B4**	429
39	87	1.6	35.3	2800	**F102_35.3 S1 M1SD4**	424	**F102_35.3 P71 BN71B4**	425
41	81	3.1	33.1	3460	**F202_33.1 S1 M1SD4**	428	**F202_33.1 P71 BN71B4**	429
42	81	1.7	33.0	2800	**F102_33.0 S1 M1SD4**	424	**F102_33.0 P71 BN71B4**	425
45	75	3.4	30.4	3380	**F202_30.4 S1 M1SD4**	428	**F202_30.4 P71 BN71B4**	429
46	73	1.9	29.6	2800	**F102_29.6 S1 M1SD4**	424	**F102_29.6 P71 BN71B4**	425
53	63	2.2	25.8	2690	**F102_25.8 S1 M1SD4**	424	**F102_25.8 P71 BN71B4**	425
60	56	2.5	22.8	2600	**F102_22.8 S1 M1SD4**	424	**F102_22.8 P71 BN71B4**	425
71	47	2.9	19.3	2470	**F102_19.3 S1 M1SD4**	424	**F102_19.3 P71 BN71B4**	425
81	42	3.1	17.0	2380	**F102_17.0 S1 M1SD4**	424	**F102_17.0 P71 BN71B4**	425
94	36	3.3	14.6	2280	**F102_14.6 S1 M1SD4**	424	**F102_14.6 P71 BN71B4**	425
105	32	3.3	13.0	2200	**F102_13.0 S1 M1SD4**	424	**F102_13.0 P71 BN71B4**	425
119	28	3.4	11.5	2120	**F102_11.5 S1 M1SD4**	424	**F102_11.5 P71 BN71B4**	425
140	24	3.7	9.8	2010	**F102_9.8 S1 M1SD4**	424	**F102_9.8 P71 BN71B4**	425
160	21	3.9	8.6	1930	**F102_8.6 S1 M1SD4**	424	**F102_8.6 P71 BN71B4**	425
185	18	4.2	7.4	1850	**F102_7.4 S1 M1SD4**	424	**F102_7.4 P71 BN71B4**	425
193	17	5.4	14.6	1830	**F102_14.6 S05 M05C2**	424	**F102_14.6 P71 BN71A2**	425
216	16	5.5	13.0	1760	**F102_13.0 S05 M05C2**	424	**F102_13.0 P71 BN71A2**	425
244	14	5.7	11.5	1690	**F102_11.5 S05 M05C2**	424	**F102_11.5 P71 BN71A2**	425
289	12	6.3	9.8	1610	**F102_9.8 S05 M05C2**	424	**F102_9.8 P71 BN71A2**	425
329	10	6.6	8.6	1540	**F102_8.6 S05 M05C2**	424	**F102_8.6 P71 BN71A2**	425
381	9	7.1	7.4	1470	**F102_7.4 S05 M05C2**	424	**F102_7.4 P71 BN71A2**	425

0.55 kW

n2	M2	S	i	Rn2			IEC	
0.44	10909	1.3	2099	55000	**F904_2099 S2 M2SA6**	458	**F904_2099 P80 BN80B6**	459
0.47	10070	1.4	1937	55000	**F904_1937 S2 M2SA6**	458	**F904_1937 P80 BN80B6**	459
0.54	8884	0.9	1709	45000	**F804_1709 S2 M2SA6**	455	**F804_1709 P80 BN80B6**	456
0.54	8849	1.6	1702	55000	**F904_1702 S2 M2SA6**	458	**F904_1702 P80 BN80B6**	459
0.58	8201	1.0	1578	45000	**F804_1578 S2 M2SA6**	455	**F804_1578 P80 BN80B6**	456

0.55 kW

n_2	M_2	S	i	R_{n2}	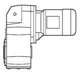	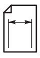	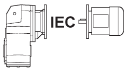	
0.59	8168	1.7	1571	55000	**F904_1571 S2 M2SA6**	458	**F904_1571 P80 BN80B6**	459
0.64	7422	1.9	1428	55000	**F904_1428 S2 M2SA6**	458	**F904_1428 P80 BN80B6**	459
0.66	7193	1.1	1384	45000	**F804_1384 S2 M2SA6**	455	**F804_1384 P80 BN80B6**	456
0.69	6885	1.2	1987	45000	**F804_1987 S1 M1LA4**	455	**F804_1987 P80 BN80A4**	456
0.75	6356	1.3	1834	45000	**F804_1834 S1 M1LA4**	455	**F804_1834 P80 BN80A4**	456
0.81	5923	1.4	1709	45000	**F804_1709 S1 M1LA4**	455	**F804_1709 P80 BN80A4**	456
0.87	5491	0.9	1585	35000	**F704_1585 S1 M1LA4**	452	**F704_1585 P80 BN80A4**	453
0.87	5467	1.5	1578	45000	**F804_1578 S1 M1LA4**	455	**F804_1578 P80 BN80A4**	456
0.93	5134	1.0	1481	35000	**F704_1481 S1 M1LA4**	452	**F704_1481 P80 BN80A4**	453
1.0	4739	1.1	1368	35000	**F704_1368 S1 M1LA4**	452	**F704_1368 P80 BN80A4**	453
1.0	4795	1.7	1384	45000	**F804_1384 S1 M1LA4**	455	**F804_1384 P80 BN80A4**	456
1.1	4427	1.8	1277	45000	**F804_1277 S1 M1LA4**	455	**F804_1277 P80 BN80A4**	456
1.2	4095	1.2	1182	35000	**F704_1182 S1 M1LA4**	452	**F704_1182 P80 BN80A4**	453
1.2	3972	2.0	1146	45000	**F804_1146 S1 M1LA4**	455	**F804_1146 P80 BN80A4**	456
1.3	3780	1.3	1091	35000	**F704_1091 S1 M1LA4**	452	**F704_1091 P80 BN80A4**	453
1.3	3667	2.2	1058	45000	**F804_1058 S1 M1LA4**	455	**F804_1058 P80 BN80A4**	456
1.4	3323	0.9	958.9	20000	**F604_958.9 S1 M1LA4**	448	**F604_958.9 P80 BN80A4**	449
1.4	3377	1.5	974.4	35000	**F704_974.4 S1 M1LA4**	452	**F704_974.4 P80 BN80A4**	453
1.5	3117	1.6	899.4	35000	**F704_899.4 S1 M1LA4**	452	**F704_899.4 P80 BN80A4**	453
1.5	3109	2.6	897.3	45000	**F804_897.3 S1 M1LA4**	455	**F804_897.3 P80 BN80A4**	456
1.6	3067	0.9	885.1	20000	**F604_885.1 S1 M1LA4**	448	**F604_885.1 P80 BN80A4**	449
1.7	2849	1.8	822.2	35000	**F704_822.2 S1 M1LA4**	452	**F704_822.2 P80 BN80A4**	453
1.8	2684	3.0	774.4	45000	**F804_774.4 S1 M1LA4**	455	**F804_774.4 P80 BN80A4**	456
1.9	2477	3.2	714.9	45000	**F804_714.9 S1 M1LA4**	455	**F804_714.9 P80 BN80A4**	456
2.1	2295	1.3	662.4	20000	**F604_662.4 S1 M1LA4**	448	**F604_662.4 P80 BN80A4**	449
2.1	2278	2.2	657.4	35000	**F704_657.4 S1 M1LA4**	452	**F704_657.4 P80 BN80A4**	453
2.3	2119	1.4	611.4	20000	**F604_611.4 S1 M1LA4**	448	**F604_611.4 P80 BN80A4**	449
2.3	2103	2.4	606.8	35000	**F704_606.8 S1 M1LA4**	452	**F704_606.8 P80 BN80A4**	453
2.6	1838	1.0	530.5	12000	**F514_530.5 S1 M1LA4**	444	**F514_530.5 P80 BN80A4**	445
2.6	1839	1.6	530.7	20000	**F604_530.7 S1 M1LA4**	448	**F604_530.7 P80 BN80A4**	449
2.7	1769	2.8	510.4	35000	**F704_510.4 S1 M1LA4**	452	**F704_510.4 P80 BN80A4**	453
2.8	1698	1.7	489.8	20000	**F604_489.8 S1 M1LA4**	448	**F604_489.8 P80 BN80A4**	449
2.9	1633	3.1	471.2	35000	**F704_471.2 S1 M1LA4**	452	**F704_471.2 P80 BN80A4**	453
3.2	1487	1.2	429.1	12000	**F514_429.1 S1 M1LA4**	444	**F514_429.1 P80 BN80A4**	445
3.2	1499	1.9	432.6	20000	**F604_432.6 S1 M1LA4**	448	**F604_432.6 P80 BN80A4**	449
3.5	1384	2.1	399.3	20000	**F604_399.3 S1 M1LA4**	448	**F604_399.3 P80 BN80A4**	449
3.9	1248	1.4	352.5	12000	**F513_352.5 S1 M1LA4**	444	**F513_352.5 P80 BN80A4**	445
4.0	1221	0.9	344.8	8500	**F413_344.8 S1 M1LA4**	440	**F413_344.8 P80 BN80A4**	441
4.0	1184	2.4	341.7	20000	**F604_341.7 S1 M1LA4**	448	**F604_341.7 P80 BN80A4**	449
4.3	1124	1.6	317.3	12000	**F513_317.3 S1 M1LA4**	444	**F513_317.3 P80 BN80A4**	445
4.4	1093	2.7	315.4	20000	**F604_315.4 S1 M1LA4**	448	**F604_315.4 P80 BN80A4**	449
4.7	1050	1.0	296.6	8500	**F413_296.6 S1 M1LA4**	440	**F413_296.6 P80 BN80A4**	441
4.8	1013	1.8	285.9	12000	**F513_285.9 S1 M1LA4**	444	**F513_285.9 P80 BN80A4**	445
5.2	945	1.2	266.9	8500	**F413_266.9 S1 M1LA4**	440	**F413_266.9 P80 BN80A4**	441
5.3	928	1.9	262.1	12000	**F513_262.1 S1 M1LA4**	444	**F513_262.1 P80 BN80A4**	445
5.7	850	1.3	240.1	8500	**F413_240.1 S1 M1LA4**	440	**F413_240.1 P80 BN80A4**	441
5.8	849	2.1	239.8	12000	**F513_239.8 S1 M1LA4**	444	**F513_239.8 P80 BN80A4**	445
6.3	780	1.4	220.1	8500	**F413_220.1 S1 M1LA4**	440	**F413_220.1 P80 BN80A4**	441
6.4	768	2.3	216.9	12000	**F513_216.9 S1 M1LA4**	444	**F513_216.9 P80 BN80A4**	445
6.8	717	2.5	202.4	12000	**F513_202.4 S1 M1LA4**	444	**F513_202.4 P80 BN80A4**	445
6.9	704	1.6	198.9	8500	**F413_198.9 S1 M1LA4**	440	**F413_198.9 P80 BN80A4**	441

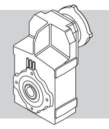

0.55 kW

n_2	M_2	S	i	R_{n2}			IEC	
7.4	657	0.9	185.4	6500	**F313_185.4 S1 M1LA4**	436	**F313_185.4 P80 BN80A4**	437
7.6	640	1.7	180.7	8500	**F413_180.7 S1 M1LA4**	440	**F413_180.7 P80 BN80A4**	441
8.2	597	1.8	168.7	8500	**F413_168.7 S1 M1LA4**	440	**F413_168.7 P80 BN80A4**	441
8.3	591	1.0	166.8	6500	**F313_166.8 S1 M1LA4**	436	**F313_166.8 P80 BN80A4**	437
8.3	587	3.1	165.6	12000	**F513_165.6 S1 M1LA4**	444	**F513_165.6 P80 BN80A4**	445
9.2	534	1.1	150.8	6500	**F313_150.8 S1 M1LA4**	436	**F313_150.8 P80 BN80A4**	437
9.8	498	1.2	140.7	6500	**F313_140.7 S1 M1LA4**	436	**F313_140.7 P80 BN80A4**	437
10.3	476	2.3	134.4	8500	**F413_134.4 S1 M1LA4**	440	**F413_134.4 P80 BN80A4**	441
10.7	455	1.3	128.4	6500	**F313_128.4 S1 M1LA4**	436	**F313_128.4 P80 BN80A4**	437
12.2	400	1.0	113.0	6130	**F253_113.0 S1 M1LA4**	432	**F253_113.0 P80 BN80A4**	433
12.3	399	1.5	112.5	6500	**F313_112.5 S1 M1LA4**	436	**F313_112.5 P80 BN80A4**	437
13.0	375	2.9	106.0	8500	**F413_106.0 S1 M1LA4**	440	**F413_106.0 P80 BN80A4**	441
13.1	373	1.1	105.4	6070	**F253_105.4 S1 M1LA4**	432	**F253_105.4 P80 BN80A4**	433
13.5	361	1.7	101.9	6500	**F313_101.9 S1 M1LA4**	436	**F313_101.9 P80 BN80A4**	437
14.5	338	1.2	95.5	5980	**F253_95.5 S1 M1LA4**	432	**F253_95.5 P80 BN80A4**	433
15.8	309	1.9	87.4	6500	**F313_87.4 S1 M1LA4**	436	**F313_87.4 P80 BN80A4**	437
16.5	295	1.4	83.4	5840	**F253_83.4 S1 M1LA4**	432	**F253_83.4 P80 BN80A4**	433
17.5	279	2.1	78.9	6500	**F313_78.9 S1 M1LA4**	436	**F313_78.9 P80 BN80A4**	437
18.0	278	0.9	76.8	4000	**F202_76.8 S1 M1LA4**	428	**F202_76.8 P80 BN80A4**	429
18.0	271	1.5	76.6	5750	**F253_76.6 S1 M1LA4**	432	**F253_76.6 P80 BN80A4**	433
20.0	250	1.0	69.1	3980	**F202_69.1 S1 M1LA4**	428	**F202_69.1 P80 BN80A4**	429
20.0	245	2.5	69.1	6500	**F313_69.1 S1 M1LA4**	436	**F313_69.1 P80 BN80A4**	437
21.1	231	1.7	65.3	5570	**F253_65.3 S1 M1LA4**	432	**F253_65.3 P80 BN80A4**	433
22.1	221	2.7	62.8	6500			**F313_62.8 P80 BN80A4**	437
22.3	224	1.1	61.9	3890	**F202_61.9 S1 M1LA4**	428	**F202_61.9 P80 BN80A4**	429
23.7	207	1.9	58.3	5430	**F253_58.3 S1 M1LA4**	432	**F253_58.3 P80 BN80A4**	433
24.3	205	1.2	56.7	3810	**F202_56.7 S1 M1LA4**	428	**F202_56.7 P80 BN80A4**	429
26.7	183	3.3	52.1	6500			**F313_52.1 P80 BN80A4**	437
27.2	184	1.4	50.7	3720	**F202_50.7 S1 M1LA4**	428	**F202_50.7 P80 BN80A4**	429
27.2	180	2.2	50.8	5270	**F253_50.8 S1 M1LA4**	432	**F253_50.8 P80 BN80A4**	433
29.2	167	3.5	47.5	6500			**F313_47.5 P80 BN80A4**	437
31	162	1.5	44.8	3610	**F202_44.8 S1 M1LA4**	428	**F202_44.8 P80 BN80A4**	429
31	161	2.4	44.4	5140	**F252_44.4 S1 M1LA4**	432	**F252_44.4 P80 BN80A4**	433
31	160	2.5	45.6	5130			**F253_45.6 P80 BN80A4**	433
33	151	1.7	41.8	3550	**F202_41.8 S1 M1LA4**	428	**F202_41.8 P80 BN80A4**	429
34	147	2.5	40.7	5030	**F252_40.7 S1 M1LA4**	432	**F252_40.7 P80 BN80A4**	433
35	143	1.0	39.6	2800	**F102_39.6 S1 M1LA4**	424	**F102_39.6 P80 BN80A4**	425
36	137	1.8	37.9	3460	**F202_37.9 S1 M1LA4**	428	**F202_37.9 P80 BN80A4**	429
38	132	3.0	36.4	4890	**F252_36.4 S1 M1LA4**	432	**F252_36.4 P80 BN80A4**	433
39	128	1.1	35.3	2800	**F102_35.3 S1 M1LA4**	424	**F102_35.3 P80 BN80A4**	425
42	119	1.2	33.0	2750	**F102_33.0 S1 M1LA4**	424	**F102_33.0 P80 BN80A4**	425
42	120	2.1	33.1	3340	**F202_33.1 S1 M1LA4**	428	**F202_33.1 P80 BN80A4**	429
43	116	3.4	32.2	4730	**F252_32.2 S1 M1LA4**	432	**F252_32.2 P80 BN80A4**	433
45	110	2.3	30.4	3260	**F202_30.4 S1 M1LA4**	428	**F202_30.4 P80 BN80A4**	429
47	107	1.3	29.6	2680	**F102_29.6 S1 M1LA4**	424	**F102_29.6 P80 BN80A4**	425
53	94	2.6	25.9	3130	**F202_25.9 S1 M1LA4**	428	**F202_25.9 P80 BN80A4**	429
54	93	1.5	25.8	2590	**F102_25.8 S1 M1LA4**	424	**F102_25.8 P80 BN80A4**	425
60	83	1.7	22.8	2510	**F102_22.8 S1 M1LA4**	424	**F102_22.8 P80 BN80A4**	425
60	84	2.8	23.1	3030	**F202_23.1 S1 M1LA4**	428	**F202_23.1 P80 BN80A4**	429
68	73	3.1	20.2	2910	**F202_20.2 S1 M1LA4**	428	**F202_20.2 P80 BN80A4**	429
71	70	1.9	19.3	2400	**F102_19.3 S1 M1LA4**	424	**F102_19.3 P80 BN80A4**	425

0.55 kW

n2	M2	S	i	Rn2			IEC	
77	65	3.3	18.1	2820	**F202_18.1 S1 M1LA4**	428	**F202_18.1 P80 BN80A4**	429
81	61	2.1	17.0	2310	**F102_17.0 S1 M1LA4**	424	**F102_17.0 P80 BN80A4**	425
94	53	2.2	14.6	2220	**F102_14.6 S1 M1LA4**	424	**F102_14.6 P80 BN80A4**	425
106	47	2.2	13.0	2140	**F102_13.0 S1 M1LA4**	424	**F102_13.0 P80 BN80A4**	425
120	42	2.3	11.5	2070	**F102_11.5 S1 M1LA4**	424	**F102_11.5 P80 BN80A4**	425
141	35	2.5	9.8	1970	**F102_9.8 S1 M1LA4**	424	**F102_9.8 P80 BN80A4**	425
161	31	2.6	8.6	1890	**F102_8.6 S1 M1LA4**	424	**F102_8.6 P80 BN80A4**	425
186	27	2.8	7.4	1810	**F102_7.4 S1 M1LA4**	424	**F102_7.4 P80 BN80A4**	425
193	26	3.6	14.6	1800	**F102_14.6 S1 M1SD2**	424	**F102_14.6 P71 BN71B2**	425
216	23	3.7	13.0	1730	**F102_13.0 S1 M1SD2**	424	**F102_13.0 P71 BN71B2**	425
244	20	3.8	11.5	1670	**F102_11.5 S1 M1SD2**	424	**F102_11.5 P71 BN71B2**	425
289	17	4.2	9.8	1590	**F102_9.8 S1 M1SD2**	424	**F102_9.8 P71 BN71B2**	425
329	15	4.4	8.6	1530	**F102_8.6 S1 M1SD2**	424	**F102_8.6 P71 BN71B2**	425
381	13	4.8	7.4	1460	**F102_7.4 S1 M1SD2**	424	**F102_7.4 P71 BN71B2**	425

0.75 kW

n2 min-1	M2 Nm	S	i	Rn2 N			IEC	
0.44	14876	0.9	2099	55000	**F904_2099 S2 M2SB6**	458	**F904_2099 P90 BN90S6**	459
0.47	13732	1.0	1937	55000	**F904_1937 S2 M2SB6**	458	**F904_1937 P90 BN90S6**	459
0.54	12067	1.2	1702	55000	**F904_1702 S2 M2SB6**	458	**F904_1702 P90 BN90S6**	459
0.59	11138	1.3	1571	55000	**F904_1571 S2 M2SB6**	458	**F904_1571 P90 BN90S6**	459
0.64	10121	1.4	1428	55000	**F904_1428 S2 M2SB6**	458	**F904_1428 P90 BN90S6**	459
0.67	9776	1.4	2099	55000	**F904_2099 S2 M2SA4**	458	**F904_2099 P80 BN80B4**	459
0.70	9255	0.9	1987	45000	**F804_1987 S2 M2SA4**	455	**F804_1987 P80 BN80B4**	456
0.72	9024	1.6	1937	55000	**F904_1937 S2 M2SA4**	458	**F904_1937 P80 BN80B4**	459
0.76	8543	0.9	1834	45000	**F804_1834 S2 M2SA4**	455	**F804_1834 P80 BN80B4**	456
0.82	7961	1.0	1709	45000	**F804_1709 S2 M2SA4**	455	**F804_1709 P80 BN80B4**	456
0.82	7930	1.8	1702	55000	**F904_1702 S2 M2SA4**	458	**F904_1702 P80 BN80B4**	459
0.89	7349	1.1	1578	45000	**F804_1578 S2 M2SA4**	455	**F804_1578 P80 BN80B4**	456
0.89	7320	1.9	1571	55000	**F904_1571 S2 M2SA4**	458	**F904_1571 P80 BN80B4**	459
0.98	6651	2.1	1428	55000	**F904_1428 S2 M2SA4**	458	**F904_1428 P80 BN80B4**	459
1.0	6446	1.2	1384	45000	**F804_1384 S2 M2SA4**	455	**F804_1384 P80 BN80B4**	456
1.1	5950	1.3	1277	45000	**F804_1277 S2 M2SA4**	455	**F804_1277 P80 BN80B4**	456
1.1	6140	2.3	1318	55000	**F904_1318 S2 M2SA4**	458	**F904_1318 P80 BN80B4**	459
1.2	5505	0.9	1182	35000	**F704_1182 S2 M2SA4**	452	**F704_1182 P80 BN80B4**	453
1.2	5339	1.5	1146	45000	**F804_1146 S2 M2SA4**	455	**F804_1146 P80 BN80B4**	456
1.2	5613	2.5	1205	55000	**F904_1205 S2 M2SA4**	458	**F904_1205 P80 BN80B4**	459
1.3	5082	1.0	1091	35000	**F704_1091 S2 M2SA4**	452	**F704_1091 P80 BN80B4**	453
1.3	4929	1.6	1058	45000	**F804_1058 S2 M2SA4**	455	**F804_1058 P80 BN80B4**	456
1.3	5181	2.7	1112	55000	**F904_1112 S2 M2SA4**	458	**F904_1112 P80 BN80B4**	459
1.4	4539	1.1	974.4	35000	**F704_974.4 S2 M2SA4**	452	**F704_974.4 P80 BN80B4**	453
1.5	4240	3.3	910.2	55000	**F904_910.2 S2 M2SA4**	458	**F904_910.2 P80 BN80B4**	459
1.6	4190	1.2	899.4	35000	**F704_899.4 S2 M2SA4**	452	**F704_899.4 P80 BN80B4**	453
1.6	4180	1.9	897.3	45000	**F804_897.3 S2 M2SA4**	455	**F804_897.3 P80 BN80B4**	456
1.7	3830	1.3	822.2	35000	**F704_822.2 S2 M2SA4**	452	**F704_822.2 P80 BN80B4**	453
1.8	3607	2.2	774.4	45000	**F804_774.4 S2 M2SA4**	455	**F804_774.4 P80 BN80B4**	456
2.0	3330	2.4	714.9	45000	**F804_714.9 S2 M2SA4**	455	**F804_714.9 P80 BN80B4**	456

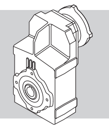

0.75 kW

n2 min-1	M2 Nm	S	i	Rn2 N			IEC	
2.1	3085	0.9	662.4	20000	**F604_662.4 S2 M2SA4**	448	**F604_662.4 P80 BN80B4**	449
2.1	3062	1.6	657.4	35000	**F704_657.4 S2 M2SA4**	452	**F704_657.4 P80 BN80B4**	453
2.3	2848	1.0	611.4	20000	**F604_611.4 S2 M2SA4**	448	**F604_611.4 P80 BN80B4**	449
2.3	2827	1.8	606.8	35000	**F704_606.8 S2 M2SA4**	452	**F704_606.8 P80 BN80B4**	453
2.3	2845	2.8	610.9	45000	**F804_610.9 S2 M2SA4**	455	**F804_610.9 P80 BN80B4**	456
2.5	2627	3.0	563.9	45000	**F804_563.9 S2 M2SA4**	455	**F804_563.9 P80 BN80B4**	456
2.6	2472	1.2	530.7	20000	**F604_530.7 S2 M2SA4**	448	**F604_530.7 P80 BN80B4**	449
2.7	2378	2.1	510.4	35000	**F704_510.4 S2 M2SA4**	452	**F704_510.4 P80 BN80B4**	453
2.9	2282	1.3	489.8	20000	**F604_489.8 S2 M2SA4**	448	**F604_489.8 P80 BN80B4**	449
2.9	2278	3.5	489.1	45000	**F804_489.1 S2 M2SA4**	455	**F804_489.1 P80 BN80B4**	456
3.0	2195	2.3	471.2	35000	**F704_471.2 S2 M2SA4**	452	**F704_471.2 P80 BN80B4**	453
3.2	2015	1.4	432.6	20000	**F604_432.6 S2 M2SA4**	448	**F604_432.6 P80 BN80B4**	449
3.3	1999	0.9	429.1	12000	**F514_429.1 S2 M2SA4**	444	**F514_429.1 P80 BN80B4**	445
3.5	1860	1.6	399.3	20000	**F604_399.3 S2 M2SA4**	448	**F604_399.3 P80 BN80B4**	449
3.5	1880	2.7	403.5	35000	**F704_403.5 S2 M2SA4**	452	**F704_403.5 P80 BN80B4**	453
3.8	1735	2.9	372.5	35000	**F704_372.5 S2 M2SA4**	452	**F704_372.5 P80 BN80B4**	453
4.0	1678	1.1	352.5	12000	**F513_352.5 S2 M2SA4**	444	**F513_352.5 P80 BN80B4**	445
4.1	1592	1.8	341.7	20000	**F604_341.7 S2 M2SA4**	448	**F604_341.7 P80 BN80B4**	449
4.4	1510	1.2	317.3	12000	**F513_317.3 S2 M2SA4**	444	**F513_317.3 P80 BN80B4**	445
4.4	1469	2.0	315.4	20000	**F604_315.4 S2 M2SA4**	448	**F604_315.4 P80 BN80B4**	449
4.6	1418	3.5	304.3	35000	**F704_304.3 S2 M2SA4**	452	**F704_304.3 P80 BN80B4**	453
4.9	1361	1.3	285.9	12000	**F513_285.9 S2 M2SA4**	444	**F513_285.9 P80 BN80B4**	445
5.0	1335	2.2	280.7	20000	**F603_280.7 S2 M2SA4**	448	**F603_280.7 P80 BN80B4**	449
5.3	1248	1.4	262.1	12000	**F513_262.1 S2 M2SA4**	444	**F513_262.1 P80 BN80B4**	445
5.4	1233	2.4	259.1	20000	**F603_259.1 S2 M2SA4**	448	**F603_259.1 P80 BN80B4**	449
5.8	1143	1.0	240.1	8500	**F413_240.1 S2 M2SA4**	440	**F413_240.1 P80 BN80B4**	441
5.8	1142	1.6	239.8	12000	**F513_239.8 S2 M2SA4**	444	**F513_239.8 P80 BN80B4**	445
5.9	1122	2.6	235.8	20000	**F603_235.8 S2 M2SA4**	448	**F603_235.8 P80 BN80B4**	449
6.4	1048	1.0	220.1	8500	**F413_220.1 S2 M2SA4**	440	**F413_220.1 P80 BN80B4**	441
6.4	1036	2.8	217.6	20000	**F603_217.6 S2 M2SA4**	448	**F603_217.6 P80 BN80B4**	449
6.5	1032	1.7	216.9	12000	**F513_216.9 S2 M2SA4**	444	**F513_216.9 P80 BN80B4**	445
6.9	963	1.9	202.4	12000	**F513_202.4 S2 M2SA4**	444	**F513_202.4 P80 BN80B4**	445
7.0	958	3.0	201.4	20000	**F603_201.4 S2 M2SA4**	448	**F603_201.4 P80 BN80B4**	449
7.0	947	1.2	198.9	8500	**F413_198.9 S2 M2SA4**	440	**F413_198.9 P80 BN80B4**	441
7.5	885	3.3	185.9	20000	**F603_185.9 S2 M2SA4**	448	**F603_185.9 P80 BN80B4**	449
7.7	860	1.3	180.7	8500	**F413_180.7 S2 M2SA4**	440	**F413_180.7 P80 BN80B4**	441
8.3	803	1.4	168.7	8500	**F413_168.7 S2 M2SA4**	440	**F413_168.7 P80 BN80B4**	441
8.5	788	2.3	165.6	12000	**F513_165.6 S2 M2SA4**	444	**F513_165.6 P80 BN80B4**	445
8.6	775	3.7	162.9	20000	**F603_162.9 S2 M2SA4**	448	**F603_162.9 P80 BN80B4**	449
10.4	640	1.7	134.4	8500	**F413_134.4 S2 M2SA4**	440	**F413_134.4 P80 BN80B4**	441
10.8	618	2.9	129.9	12000	**F513_129.9 S2 M2SA4**	444	**F513_129.9 P80 BN80B4**	445
10.9	611	1.0	128.4	6500	**F313_128.4 S2 M2SA4**	436	**F313_128.4 P80 BN80B4**	437
12.4	536	1.1	112.5	6500	**F313_112.5 S2 M2SA4**	436	**F313_112.5 P80 BN80B4**	437
13.2	505	2.2	106.0	8500	**F413_106.0 S2 M2SA4**	440	**F413_106.0 P80 BN80B4**	441
13.7	485	1.2	101.9	6500	**F313_101.9 S2 M2SA4**	436	**F313_101.9 P80 BN80B4**	437
16.0	416	1.4	87.4	6500	**F313_87.4 S2 M2SA4**	436	**F313_87.4 P80 BN80B4**	437
16.5	404	2.7	84.9	8500	**F413_84.9 S2 M2SA4**	440	**F413_84.9 P80 BN80B4**	441
16.8	397	1.0	83.4	5350	**F253_83.4 S2 M2SA4**	432	**F253_83.4 P80 BN80B4**	433
17.8	375	1.6	78.9	6500	**F313_78.9 S2 M2SA4**	436	**F313_78.9 P80 BN80B4**	437
18.3	365	1.1	76.6	5300	**F253_76.6 S2 M2SA4**	432	**F253_76.6 P80 BN80B4**	433
20.3	329	1.8	69.1	6500	**F313_69.1 S2 M2SA4**	436	**F313_69.1 P80 BN80B4**	437

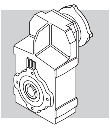

0.75 kW

n_2 min-1	M_2 Nm	S	i	R_{n2} N			IEC	
21.1	317	3.5	66.5	8500	**F413_66.5 S2 M2SA4**	440	**F413_66.5 P80 BN80B4**	441
21.4	311	1.3	65.3	5180	**F253_65.3 S2 M2SA4**	432	**F253_65.3 P80 BN80B4**	433
22.3	299	2.0	62.8	6500	**F313_62.8 S2 M2SA4**	436	**F313_62.8 P80 BN80B4**	437
24.0	278	1.4	58.3	5080	**F253_58.3 S2 M2SA4**	432	**F253_58.3 P80 BN80B4**	433
24.7	276	0.9	56.7	3590	**F202_56.7 S2 M2SA4**	428	**F202_56.7 P80 BN80B4**	429
26.9	248	2.4	52.1	6500	**F313_52.1 S2 M2SA4**	436	**F313_52.1 P80 BN80B4**	437
27.6	247	1.0	50.7	3510	**F202_50.7 S2 M2SA4**	428	**F202_50.7 P80 BN80B4**	429
27.6	242	1.7	50.8	4960	**F253_50.8 S2 M2SA4**	432	**F253_50.8 P80 BN80B4**	433
29.4	226	2.6	47.5	6500	**F313_47.5 S2 M2SA4**	436	**F313_47.5 P80 BN80B4**	437
31	218	1.1	44.8	3420	**F202_44.8 S2 M2SA4**	428	**F202_44.8 P80 BN80B4**	429
31	217	1.8	45.6	4860	**F253_45.6 S2 M2SA4**	432	**F253_45.6 P80 BN80B4**	433
31	217	2.8	44.6	6500	**F312_44.6 S2 M2SA4**	436	**F312_44.6 P80 BN80B4**	437
32	216	1.8	44.4	4890	**F252_44.4 S2 M2SA4**	432	**F252_44.4 P80 BN80B4**	433
33	203	1.2	41.8	3370	**F202_41.8 S2 M2SA4**	428	**F202_41.8 P80 BN80B4**	429
34	198	1.9	40.7	4790	**F252_40.7 S2 M2SA4**	432	**F252_40.7 P80 BN80B4**	433
35	196	3.1	40.4	6500	**F312_40.4 S2 M2SA4**	436	**F312_40.4 P80 BN80B4**	437
37	184	1.4	37.9	3300	**F202_37.9 S2 M2SA4**	428	**F202_37.9 P80 BN80B4**	429
37	183	3.3	37.7	6500	**F312_37.7 S2 M2SA4**	436	**F312_37.7 P80 BN80B4**	437
38	177	2.3	36.4	4680	**F252_36.4 S2 M2SA4**	432	**F252_36.4 P80 BN80B4**	433
42	161	1.6	33.1	3200	**F202_33.1 S2 M2SA4**	428	**F202_33.1 P80 BN80B4**	429
44	156	2.6	32.2	4540	**F252_32.2 S2 M2SA4**	432	**F252_32.2 P80 BN80B4**	433
46	148	1.7	30.4	3140	**F202_30.4 S2 M2SA4**	428	**F202_30.4 P80 BN80B4**	429
47	144	1.0	29.6	2550	**F102_29.6 S2 M2SA4**	424	**F102_29.6 P80 BN80B4**	425
47	146	2.7	30.0	4470	**F252_30.0 S2 M2SA4**	432	**F252_30.0 P80 BN80B4**	433
51	132	3	27.2	4360	**F252_27.2 S2 M2SA4**	432	**F252_27.2 P80 BN80B4**	433
54	125	1.1	25.8	2470	**F102_25.8 S2 M2SA4**	424	**F102_25.8 P80 BN80B4**	425
54	126	1.9	25.9	3020	**F202_25.9 S2 M2SA4**	428	**F202_25.9 P80 BN80B4**	429
59	116	3.5	23.8	4210	**F252_23.8 S2 M2SA4**	432	**F252_23.8 P80 BN80B4**	433
60	113	2.1	23.1	2930	**F202_23.1 S2 M2SA4**	428	**F202_23.1 P80 BN80B4**	429
61	111	1.3	22.8	2400	**F102_22.8 S2 M2SA4**	424	**F102_22.8 P80 BN80B4**	425
69	98	2.3	20.2	2830	**F202_20.2 S2 M2SA4**	428	**F202_20.2 P80 BN80B4**	429
72	94	1.4	19.3	2310	**F102_19.3 S2 M2SA4**	424	**F102_19.3 P80 BN80B4**	425
77	88	2.4	18.1	2740	**F202_18.1 S2 M2SA4**	428	**F202_18.1 P80 BN80B4**	429
82	83	1.6	17.0	2230	**F102_17.0 S2 M2SA4**	424	**F102_17.0 P80 BN80B4**	425
95	72	2.8	14.8	2600	**F202_14.8 S2 M2SA4**	428	**F202_14.8 P80 BN80B4**	429
96	71	1.7	14.6	2150	**F102_14.6 S2 M2SA4**	424	**F102_14.6 P80 BN80B4**	425
107	63	1.6	13.0	2070	**F102_13.0 S2 M2SA4**	424	**F102_13.0 P80 BN80B4**	425
121	56	1.7	11.5	2010	**F102_11.5 S2 M2SA4**	424	**F102_11.5 P80 BN80B4**	425
125	55	3.2	11.2	2390	**F202_11.2 S2 M2SA4**	428	**F202_11.2 P80 BN80B4**	429
143	48	1.9	9.8	1920	**F102_9.8 S2 M2SA4**	424	**F102_9.8 P80 BN80B4**	425
163	42	2.0	8.6	1850	**F102_8.6 S2 M2SA4**	424	**F102_8.6 P80 BN80B4**	425
189	36	2.1	7.4	1770	**F102_7.4 S2 M2SA4**	424	**F102_7.4 P80 BN80B4**	425
192	35	2.6	14.6	1770	**F102_14.6 S1 M1LA2**	424	**F102_14.6 P80 BN80A2**	425
216	32	2.7	13.0	1710	**F102_13.0 S1 M1LA2**	424	**F102_13.0 P80 BN80A2**	425
244	28	2.8	11.5	1650	**F102_11.5 S1 M1LA2**	424	**F102_11.5 P80 BN80A2**	425
288	24	3.1	9.8	1570	**F102_9.8 S1 M1LA2**	424	**F102_9.8 P80 BN80A2**	425
327	21	3.2	8.6	1510	**F102_8.6 S1 M1LA2**	424	**F102_8.6 P80 BN80A2**	425
380	18	3.5	7.4	1440	**F102_7.4 S1 M1LA2**	424	**F102_7.4 P80 BN80A2**	425

1.1 kW

n_2 min-1	M_2 Nm	S	i	R_{n2} N			IEC	
0.59	16336	0.9	1571	55000	**F904_1571 S3 M3SA6**	458	**F904_1571 P90 BN90L6**	459
0.64	14845	0.9	1428	55000	**F904_1428 S3 M3SA6**	458	**F904_1428 P90 BN90L6**	459
0.67	14338	1.0	2099	55000	**F904_2099 S2 M2SB4**	458	**F904_2099 P90 BN90S4**	459
0.72	13235	1.1	1937	55000	**F904_1937 S2 M2SB4**	458	**F904_1937 P90 BN90S4**	459
0.82	11630	1.2	1702	55000	**F904_1702 S2 M2SB4**	458	**F904_1702 P90 BN90S4**	459
0.89	10735	1.3	1571	55000	**F904_1571 S2 M2SB4**	458	**F904_1571 P90 BN90S4**	459
0.98	9755	1.4	1428	55000	**F904_1428 S2 M2SB4**	458	**F904_1428 P90 BN90S4**	459
1.1	8727	0.9	1277	45000	**F804_1277 S2 M2SB4**	455	**F804_1277 P90 BN90S4**	456
1.1	9005	1.6	1318	55000	**F904_1318 S2 M2SB4**	458	**F904_1318 P90 BN90S4**	459
1.2	7831	1.0	1146	45000	**F804_1146 S2 M2SB4**	455	**F804_1146 P90 BN90S4**	456
1.2	8232	1.7	1205	55000	**F904_1205 S2 M2SB4**	458	**F904_1205 P90 BN90S4**	459
1.3	7229	1.1	1058	45000	**F804_1058 S2 M2SB4**	455	**F804_1058 P90 BN90S4**	456
1.3	7599	1.8	1112	55000	**F904_1112 S2 M2SB4**	458	**F904_1112 P90 BN90S4**	459
1.5	6218	2.3	910.2	55000	**F904_910.2 S2 M2SB4**	458	**F904_910.2 P90 BN90S4**	459
1.6	6130	1.3	897.3	45000	**F804_897.3 S2 M2SB4**	455	**F804_897.3 P90 BN90S4**	456
1.7	5617	0.9	822.2	35000	**F704_822.2 S2 M2SB4**	452	**F704_822.2 P90 BN90S4**	453
1.8	5291	1.5	774.4	45000	**F804_774.4 S2 M2SB4**	455	**F804_774.4 P90 BN90S4**	456
1.8	5284	2.6	773.4	55000	**F904_773.4 S2 M2SB4**	458	**F904_773.4 P90 BN90S4**	459
1.9	5085	1.6	489.1	45000	**F804_489.1 S3 M3SA6**	455	**F804_489.1 P90 BN90L6**	456
1.9	5152	2.7	495.6	55000	**F904_495.6 S3 M3SA6**	458	**F904_495.6 P90 BN90L6**	459
2.0	4898	1.0	471.2	35000	**F704_471.2 S3 M3SA6**	452	**F704_471.2 P90 BN90L6**	453
2.0	4694	1.7	451.5	45000	**F804_451.5 S3 M3SA6**	455	**F804_451.5 P90 BN90L6**	456
2.0	4884	1.6	714.9	45000	**F804_714.9 S2 M2SB4**	455	**F804_714.9 P90 BN90S4**	456
2.1	4491	1.1	657.4	35000	**F704_657.4 S2 M2SB4**	452	**F704_657.4 P90 BN90S4**	453
2.2	4274	3.3	625.6	55000	**F904_625.6 S2 M2SB4**	458	**F904_625.6 P90 BN90S4**	459
2.3	4146	1.2	606.8	35000	**F704_606.8 S2 M2SB4**	452	**F704_606.8 P90 BN90S4**	453
2.3	4173	1.9	610.9	45000	**F804_610.9 S2 M2SB4**	455	**F804_610.9 P90 BN90S4**	456
2.4	3945	3.5	577.5	55000	**F904_577.5 S2 M2SB4**	458	**F904_577.5 P90 BN90S4**	459
2.5	3852	2.1	563.9	45000	**F804_563.9 S2 M2SB4**	455	**F804_563.9 P90 BN90S4**	456
2.7	3487	1.4	510.4	35000	**F704_510.4 S2 M2SB4**	452	**F704_510.4 P90 BN90S4**	453
2.9	3347	0.9	489.8	20000	**F604_489.8 S2 M2SB4**	448	**F604_489.8 P90 BN90S4**	449
2.9	3342	2.4	489.1	45000	**F804_489.1 S2 M2SB4**	455	**F804_489.1 P90 BN90S4**	456
3.0	3219	1.6	471.2	35000	**F704_471.2 S2 M2SB4**	452	**F704_471.2 P90 BN90S4**	453
3.1	3085	2.6	451.5	45000	**F804_451.5 S2 M2SB4**	455	**F804_451.5 P90 BN90S4**	456
3.2	2956	1.0	432.6	20000	**F604_432.6 S2 M2SB4**	448	**F604_432.6 P90 BN90S4**	449
3.5	2728	1.1	399.3	20000	**F604_399.3 S2 M2SB4**	448	**F604_399.3 P90 BN90S4**	449
3.5	2757	1.8	403.5	35000	**F704_403.5 S2 M2SB4**	452	**F704_403.5 P90 BN90S4**	453
3.7	2618	3.1	383.2	45000	**F804_383.2 S2 M2SB4**	455	**F804_383.2 P90 BN90S4**	456
3.8	2545	2.0	372.5	35000	**F704_372.5 S2 M2SB4**	452	**F704_372.5 P90 BN90S4**	453
4.0	2416	3.3	353.7	45000	**F804_353.7 S2 M2SB4**	455	**F804_353.7 P90 BN90S4**	456
4.1	2334	1.2	341.7	20000	**F604_341.7 S2 M2SB4**	448	**F604_341.7 P90 BN90S4**	449
4.4	2155	1.3	315.4	20000	**F604_315.4 S2 M2SB4**	448	**F604_315.4 P90 BN90S4**	449
4.6	2079	2.4	304.3	35000	**F704_304.3 S2 M2SB4**	452	**F704_304.3 P90 BN90S4**	453
4.9	1996	0.9	285.9	12000	**F513_285.9 S2 M2SB4**	444	**F513_285.9 P90 BN90S4**	445
5.0	1960	1.5	280.7	20000	**F603_280.7 S2 M2SB4**	448	**F603_280.7 P90 BN90S4**	449
5.0	1919	2.6	280.9	35000	**F704_280.9 S2 M2SB4**	452	**F704_280.9 P90 BN90S4**	453
5.3	1830	1.0	262.1	12000	**F513_262.1 S2 M2SB4**	444	**F513_262.1 P90 BN90S4**	445
5.8	1675	1.1	239.8	12000	**F513_239.8 S2 M2SB4**	444	**F513_239.8 P90 BN90S4**	445
6.0	1603	3.1	234.6	35000	**F704_234.6 S2 M2SB4**	452	**F704_234.6 P90 BN90S4**	453
6.5	1514	1.2	216.9	12000	**F513_216.9 S2 M2SB4**	444	**F513_216.9 P90 BN90S4**	445
6.5	1479	3.4	216.5	35000	**F704_216.5 S2 M2SB4**	452	**F704_216.5 P90 BN90S4**	453

1.1 kW

n_2 min-1	M_2 Nm	S	i	R_{n2} N	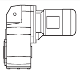		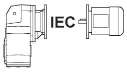	
6.9	1413	1.3	202.4	12000	**F513_202.4 S2 M2SB4**	444	**F513_202.4 P90 BN90S4**	445
8.3	1178	0.9	168.7	8500	**F413_168.7 S2 M2SB4**	440	**F413_168.7 P90 BN90S4**	441
8.5	1156	1.6	165.6	12000	**F513_165.6 S2 M2SB4**	444	**F513_165.6 P90 BN90S4**	445
10.4	938	1.2	134.4	8500	**F413_134.4 S2 M2SB4**	440	**F413_134.4 P90 BN90S4**	441
10.8	907	2.0	129.9	12000	**F513_129.9 S2 M2SB4**	444	**F513_129.9 P90 BN90S4**	445
13.2	740	1.5	106.0	8500	**F413_106.0 S2 M2SB4**	440	**F413_106.0 P90 BN90S4**	441
13.3	734	2.5	105.1	12000	**F513_105.1 S2 M2SB4**	444	**F513_105.1 P90 BN90S4**	445
16.0	610	1.0	87.4	6500	**F313_87.4 S2 M2SB4**	436	**F313_87.4 P90 BN90S4**	437
16.5	593	1.9	84.9	8500	**F413_84.9 S2 M2SB4**	440	**F413_84.9 P90 BN90S4**	441
16.8	581	3.1	83.2	12000	**F513_83.2 S2 M2SB4**	444	**F513_83.2 P90 BN90S4**	445
17.8	551	1.1	78.9	6500	**F313_78.9 S2 M2SB4**	436	**F313_78.9 P90 BN90S4**	437
20.3	482	1.2	69.1	6500	**F313_69.1 S2 M2SB4**	436	**F313_69.1 P90 BN90S4**	437
21.1	464	2.4	66.5	8500	**F413_66.5 S2 M2SB4**	440	**F413_66.5 P90 BN90S4**	441
22.3	438	1.4	62.8	6500	**F313_62.8 S2 M2SB4**	436	**F313_62.8 P90 BN90S4**	437
23.2	421	2.6	60.2	8500	**F413_60.2 S2 M2SB4**	440	**F413_60.2 P90 BN90S4**	441
24.0	407	1.0	58.3	4500	**F253_58.3 S2 M2SB4**	432	**F253_58.3 P90 BN90S4**	433
26.9	364	1.6	52.1	6500	**F313_52.1 S2 M2SB4**	436	**F313_52.1 P90 BN90S4**	437
27.2	360	3.0	51.5	8500	**F413_51.5 S2 M2SB4**	440	**F413_51.5 P90 BN90S4**	441
27.6	355	1.1	50.8	4450	**F253_50.8 S2 M2SB4**	432	**F253_50.8 P90 BN90S4**	433
29.2	342	3.1	47.9	8500	**F412_47.9 S2 M2SB4**	440	**F412_47.9 P90 BN90S4**	441
29.4	332	1.7	47.5	6500	**F313_47.5 S2 M2SB4**	436	**F313_47.5 P90 BN90S4**	437
31	318	1.3	45.6	4400	**F253_45.6 S2 M2SB4**	432	**F253_45.6 P90 BN90S4**	433
31	318	1.9	44.6	6500	**F312_44.6 S2 M2SB4**	436	**F312_44.6 P90 BN90S4**	437
32	317	1.2	44.4	4470	**F252_44.4 S2 M2SB4**	432	**F252_44.4 P90 BN90S4**	433
34	290	1.3	40.7	4410	**F252_40.7 S2 M2SB4**	432	**F252_40.7 P90 BN90S4**	433
35	288	2.1	40.4	6500	**F312_40.4 S2 M2SB4**	436	**F312_40.4 P90 BN90S4**	437
37	270	0.9	37.9	3050	**F202_37.9 S2 M2SB4**	428	**F202_37.9 P90 BN90S4**	429
37	269	2.2	37.7	6500	**F312_37.7 S2 M2SB4**	436	**F312_37.7 P90 BN90S4**	437
38	260	1.5	36.4	4330	**F252_36.4 S2 M2SB4**	432	**F252_36.4 P90 BN90S4**	433
41	245	2.4	34.4	6500	**F312_34.4 S2 M2SB4**	436	**F312_34.4 P90 BN90S4**	437
42	236	1.1	33.1	2980	**F202_33.1 S2 M2SB4**	428	**F202_33.1 P90 BN90S4**	429
44	230	1.7	32.2	4240	**F252_32.2 S2 M2SB4**	432	**F252_32.2 P90 BN90S4**	433
46	217	1.2	30.4	2930	**F202_30.4 S2 M2SB4**	428	**F202_30.4 P90 BN90S4**	429
46	215	2.8	30.1	6500	**F312_30.1 S2 M2SB4**	436	**F312_30.1 P90 BN90S4**	437
47	214	1.9	30.0	4190	**F252_30.0 S2 M2SB4**	432	**F252_30.0 P90 BN90S4**	433
51	194	2.1	27.2	4100	**F252_27.2 S2 M2SB4**	432	**F252_27.2 P90 BN90S4**	433
51	195	3.1	27.3	6500	**F312_27.3 S2 M2SB4**	436	**F312_27.3 P90 BN90S4**	437
54	185	1.3	25.9	2840	**F202_25.9 S2 M2SB4**	428	**F202_25.9 P90 BN90S4**	429
59	169	2.4	23.8	3990	**F252_23.8 S2 M2SB4**	432	**F252_23.8 P90 BN90S4**	433
60	165	1.4	23.1	2780	**F202_23.1 S2 M2SB4**	428	**F202_23.1 P90 BN90S4**	429
64	156	2.6	21.8	3920	**F252_21.8 S2 M2SB4**	432	**F252_21.8 P90 BN90S4**	433
69	144	1.6	20.2	2690	**F202_20.2 S2 M2SB4**	428	**F202_20.2 P90 BN90S4**	429
72	138	1.0	19.3	2170	**F102_19.3 S2 M2SB4**	424	**F102_19.3 P90 BN90S4**	425
75	133	3.0	18.6	3780	**F252_18.6 S2 M2SB4**	432	**F252_18.6 P90 BN90S4**	433
77	129	1.7	18.1	2620	**F202_18.1 S2 M2SB4**	428	**F202_18.1 P90 BN90S4**	429
82	121	1.1	17.0	2110	**F102_17.0 S2 M2SB4**	424	**F102_17.0 P90 BN90S4**	425
84	119	3.4	16.6	3670	**F252_16.6 S2 M2SB4**	432	**F252_16.6 P90 BN90S4**	433
95	106	1.9	14.8	2500	**F202_14.8 S2 M2SB4**	428	**F202_14.8 P90 BN90S4**	429
96	104	1.1	14.6	2050	**F102_14.6 S2 M2SB4**	424	**F102_14.6 P90 BN90S4**	425
107	93	1.1	13.0	1980	**F102_13.0 S2 M2SB4**	424	**F102_13.0 P90 BN90S4**	425
121	82	1.2	11.5	1920	**F102_11.5 S2 M2SB4**	424	**F102_11.5 P90 BN90S4**	425

1.1 kW

n_2 min-1	M_2 Nm	S	i	R_{n2} N	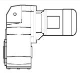		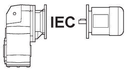 IEC	
125	80	2.2	11.2	2310	**F202_11.2 S2 M2SB4**	428	**F202_11.2 P90 BN90S4**	429
143	70	1.3	9.8	1840	**F102_9.8 S2 M2SB4**	424	**F102_9.8 P90 BN90S4**	425
160	62	2.5	8.7	2160	**F202_8.7 S2 M2SB4**	428	**F202_8.7 P90 BN90S4**	429
163	61	1.3	8.6	1780	**F102_8.6 S2 M2SB4**	424	**F102_8.6 P90 BN90S4**	425
179	56	2.6	7.8	2100	**F202_7.8 S2 M2SB4**	428	**F202_7.8 P90 BN90S4**	429
189	53	1.4	7.4	1720	**F102_7.4 S2 M2SB4**	424	**F102_7.4 P90 BN90S4**	425
218	46	2.8	6.4	1980	**F202_6.4 S2 M2SB4**	428	**F202_6.4 P90 BN90S4**	429
243	41	1.9	11.5	1600	**F102_11.5 S2 M2SA2**	424	**F102_11.5 P80 BN80B2**	425
249	40	3.5	11.2	1910	**F202_11.2 S2 M2SA2**	428	**F202_11.2 P80 BN80B2**	429
287	35	2.1	9.8	1530	**F102_9.8 S2 M2SA2**	424	**F102_9.8 P80 BN80B2**	425
326	31	2.2	8.6	1480	**F102_8.6 S2 M2SA2**	424	**F102_8.6 P80 BN80B2**	425
378	26	2.4	7.4	1410	**F102_7.4 S2 M2SA2**	424	**F102_7.4 P80 BN80B2**	425

1.5 kW

n_2 min-1	M_2 Nm	S	i	R_{n2} N	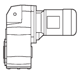		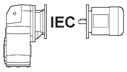 IEC	
0.83	15747	0.9	1702	55000	**F904_1702 S3 M3SA4**	458	**F904_1702 P90 BN90LA4**	459
0.90	14535	1.0	1571	55000	**F904_1571 S3 M3SA4**	458	**F904_1571 P90 BN90LA4**	459
0.99	13208	1.1	1428	55000	**F904_1428 S3 M3SA4**	458	**F904_1428 P90 BN90LA4**	459
1.1	12192	1.1	1318	55000	**F904_1318 S3 M3SA4**	458	**F904_1318 P90 BN90LA4**	459
1.2	11146	1.3	1205	55000	**F904_1205 S3 M3SA4**	458	**F904_1205 P90 BN90LA4**	459
1.3	10288	1.4	1112	55000	**F904_1112 S3 M3SA4**	458	**F904_1112 P90 BN90LA4**	459
1.5	8419	1.7	910.2	55000	**F904_910.2 S3 M3SA4**	458	**F904_910.2 P90 BN90LA4**	459
1.6	8300	1.0	897.3	45000	**F804_897.3 S3 M3SA4**	455	**F804_897.3 P90 BN90LA4**	456
1.8	7164	1.1	774.4	45000	**F804_774.4 S3 M3SA4**	455	**F804_774.4 P90 BN90LA4**	456
1.8	7154	2.0	773.4	55000	**F904_773.4 S3 M3SA4**	458	**F904_773.4 P90 BN90LA4**	459
2.0	6612	1.2	714.9	45000	**F804_714.9 S3 M3SA4**	455	**F804_714.9 P90 BN90LA4**	456
2.3	5613	0.9	606.8	35000	**F704_606.8 S3 M3SA4**	452	**F704_606.8 P90 BN90LA4**	453
2.3	5651	1.4	610.9	45000	**F804_610.9 S3 M3SA4**	455	**F804_610.9 P90 BN90LA4**	456
2.3	5787	2.4	625.6	55000	**F904_625.6 S3 M3SA4**	458	**F904_625.6 P90 BN90LA4**	459
2.4	5342	2.6	577.5	55000	**F904_577.5 S3 M3SA4**	458	**F904_577.5 P90 BN90LA4**	459
2.5	5216	1.5	563.9	45000	**F804_563.9 S3 M3SA4**	455	**F804_563.9 P90 BN90LA4**	456
2.8	4721	1.1	510.4	35000	**F704_510.4 S3 M3SA4**	452	**F704_510.4 P90 BN90LA4**	453
2.8	4584	3.1	495.6	55000	**F904_495.6 S3 M3SA4**	458	**F904_495.6 P90 BN90LA4**	459
2.9	4524	1.8	489.1	45000	**F804_489.1 S3 M3SA4**	455	**F804_489.1 P90 BN90LA4**	456
3.0	4358	1.1	471.2	35000	**F704_471.2 S3 M3SA4**	452	**F704_471.2 P90 BN90LA4**	453
3.1	4176	1.9	451.5	45000	**F804_451.5 S3 M3SA4**	455	**F804_451.5 P90 BN90LA4**	456
3.1	4231	3.3	457.5	55000	**F904_457.5 S3 M3SA4**	458	**F904_457.5 P90 BN90LA4**	459
3.5	3732	1.3	403.5	35000	**F704_403.5 S3 M3SA4**	452	**F704_403.5 P90 BN90LA4**	453
3.7	3544	2.3	383.2	45000	**F804_383.2 S3 M3SA4**	455	**F804_383.2 P90 BN90LA4**	456
3.8	3445	1.5	372.5	35000	**F704_372.5 S3 M3SA4**	452	**F704_372.5 P90 BN90LA4**	453
4.0	3272	2.4	353.7	45000	**F804_353.7 S3 M3SA4**	455	**F804_353.7 P90 BN90LA4**	456
4.1	3160	0.9	341.7	20000	**F604_341.7 S3 M3SA4**	448	**F604_341.7 P90 BN90LA4**	449
4.5	2917	1.0	315.4	20000	**F604_315.4 S3 M3SA4**	448	**F604_315.4 P90 BN90LA4**	449
4.6	2815	1.8	304.3	35000	**F704_304.3 S3 M3SA4**	452	**F704_304.3 P90 BN90LA4**	453
4.8	2745	2.9	296.7	45000	**F804_296.7 S3 M3SA4**	455	**F804_296.7 P90 BN90LA4**	456
5.0	2653	1.1	280.7	20000	**F603_280.7 S3 M3SA4**	448	**F603_280.7 P90 BN90LA4**	449
5.0	2599	1.9	280.9	35000	**F704_280.9 S3 M3SA4**	452	**F704_280.9 P90 BN90LA4**	453

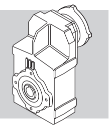

1.5 kW

n_2 min-1	M_2 Nm	S	i	R_{n2} N			IEC	
5.1	2534	3.2	273.9	45000	**F804_273.9 S3 M3SA4**	455	**F804_273.9 P90 BN90LA4**	456
5.4	2449	1.2	259.1	20000	**F603_259.1 S3 M3SA4**	448	**F603_259.1 P90 BN90LA4**	449
6.0	2229	1.3	235.8	20000	**F603_235.8 S3 M3SA4**	448	**F603_235.8 P90 BN90LA4**	449
6.0	2170	2.3	234.6	35000	**F704_234.6 S3 M3SA4**	452	**F704_234.6 P90 BN90LA4**	453
6.5	2057	1.4	217.6	20000	**F603_217.6 S3 M3SA4**	448	**F603_217.6 P90 BN90LA4**	449
6.5	2003	2.5	216.5	35000	**F704_216.5 S3 M3SA4**	452	**F704_216.5 P90 BN90LA4**	453
7.0	1913	0.9	202.4	12000	**F513_202.4 S3 M3SA4**	444	**F513_202.4 P90 BN90LA4**	445
7.0	1904	1.5	201.4	20000	**F603_201.4 S3 M3SA4**	448	**F603_201.4 P90 BN90LA4**	449
7.2	1853	2.7	196.0	35000	**F703_196.0 S3 M3SA4**	452	**F703_196.0 P90 BN90LA4**	453
7.6	1757	1.7	185.9	20000	**F603_185.9 S3 M3SA4**	448	**F603_185.9 P90 BN90LA4**	449
7.8	1711	2.9	180.9	35000	**F703_180.9 S3 M3SA4**	452	**F703_180.9 P90 BN90LA4**	453
8.5	1566	1.1	165.6	12000	**F513_165.6 S3 M3SA4**	444	**F513_165.6 P90 BN90LA4**	445
8.5	1576	3.2	166.7	35000	**F703_166.7 S3 M3SA4**	452	**F703_166.7 P90 BN90LA4**	453
8.7	1540	1.9	162.9	20000	**F603_162.9 S3 M3SA4**	448	**F603_162.9 P90 BN90LA4**	449
9.2	1454	3.4	153.8	35000	**F703_153.8 S3 M3SA4**	452	**F703_153.8 P90 BN90LA4**	453
9.4	1421	2.0	150.4	20000	**F603_150.4 S3 M3SA4**	448	**F603_150.4 P90 BN90LA4**	449
10.8	1234	2.4	130.5	20000	**F603_130.5 S3 M3SA4**	448	**F603_130.5 P90 BN90LA4**	449
10.9	1228	1.5	129.9	12000	**F513_129.9 S3 M3SA4**	444	**F513_129.9 P90 BN90LA4**	445
11.7	1139	2.5	120.5	20000	**F603_120.5 S3 M3SA4**	448	**F603_120.5 P90 BN90LA4**	449
13.3	1002	1.1	106.0	8500	**F413_106.0 S3 M3SA4**	440	**F413_106.0 P90 BN90LA4**	441
13.3	1006	2.9	106.4	20000	**F603_106.4 S3 M3SA4**	448	**F603_106.4 P90 BN90LA4**	449
13.4	993	1.8	105.1	12000	**F513_105.1 S3 M3SA4**	444	**F513_105.1 P90 BN90LA4**	445
14.4	928	3.1	98.2	20000	**F603_98.2 S3 M3SA4**	448	**F603_98.2 P90 BN90LA4**	449
16.6	802	1.4	84.9	8500	**F413_84.9 S3 M3SA4**	440	**F413_84.9 P90 BN90LA4**	441
16.9	787	2.3	83.2	12000	**F513_83.2 S3 M3SA4**	444	**F513_83.2 P90 BN90LA4**	445
20.4	653	0.9	69.1	6500	**F313_69.1 S3 M3SA4**	436	**F313_69.1 P90 BN90LA4**	437
21.2	629	1.7	66.5	8500	**F413_66.5 S3 M3SA4**	440	**F413_66.5 P90 BN90LA4**	441
21.4	622	2.9	65.8	12000	**F513_65.8 S3 M3SA4**	444	**F513_65.8 P90 BN90LA4**	445
22.5	593	1.0	62.8	6500	**F313_62.8 S3 M3SA4**	436	**F313_62.8 P90 BN90LA4**	437
23.4	570	1.9	60.2	8500	**F413_60.2 S3 M3SA4**	440	**F413_60.2 P90 BN90LA4**	441
27.1	492	1.2	52.1	6500	**F313_52.1 S3 M3SA4**	436	**F313_52.1 P90 BN90LA4**	437
27.4	487	2.2	51.5	8500	**F413_51.5 S3 M3SA4**	440	**F413_51.5 P90 BN90LA4**	441
29.4	463	2.3	47.9	8500	**F412_47.9 S3 M3SA4**	440	**F412_47.9 P90 BN90LA4**	441
29.7	449	1.3	47.5	6500	**F313_47.5 S3 M3SA4**	436	**F313_47.5 P90 BN90LA4**	437
31	431	0.9	45.6	3880	**F253_45.6 S3 M3SA4**	432	**F253_45.6 P90 BN90LA4**	433
32	431	1.4	44.6	6500	**F312_44.6 S3 M3SA4**	436	**F312_44.6 P90 BN90LA4**	437
35	393	1.0	40.7	3970	**F252_40.7 S3 M3SA4**	432	**F252_40.7 P90 BN90LA4**	433
35	390	1.5	40.4	6500	**F312_40.4 S3 M3SA4**	436	**F312_40.4 P90 BN90LA4**	437
37	364	1.6	37.7	6500	**F312_37.7 S3 M3SA4**	436	**F312_37.7 P90 BN90LA4**	437
37	369	3.0	38.2	8500	**F412_38.2 S3 M3SA4**	440	**F412_38.2 P90 BN90LA4**	441
39	352	1.1	36.4	3940	**F252_36.4 S3 M3SA4**	432	**F252_36.4 P90 BN90LA4**	433
41	332	1.8	34.4	6500	**F312_34.4 S3 M3SA4**	436	**F312_34.4 P90 BN90LA4**	437
44	311	1.3	32.2	3890	**F252_32.2 S3 M3SA4**	432	**F252_32.2 P90 BN90LA4**	433
47	290	1.4	30.0	3860	**F252_30.0 S3 M3SA4**	432	**F252_30.0 P90 BN90LA4**	433
47	291	2.1	30.1	6500	**F312_30.1 S3 M3SA4**	436	**F312_30.1 P90 BN90LA4**	437
52	263	1.5	27.2	3810	**F252_27.2 S3 M3SA4**	432	**F252_27.2 P90 BN90LA4**	433
52	263	2.3	27.3	6500	**F312_27.3 S3 M3SA4**	436	**F312_27.3 P90 BN90LA4**	437
54	250	1.0	25.9	2640	**F202_25.9 S3 M3SA4**	428	**F202_25.9 P90 BN90LA4**	429
59	229	1.7	23.8	3730	**F252_23.8 S3 M3SA4**	432	**F252_23.8 P90 BN90LA4**	433
60	226	2.7	23.4	6480	**F312_23.4 S3 M3SA4**	436	**F312_23.4 P90 BN90LA4**	437
61	224	1.1	23.1	2600	**F202_23.1 S3 M3SA4**	428	**F202_23.1 P90 BN90LA4**	429

1.5 kW

n2 min-1	M2 Nm	S	i	Rn2 N			IEC	
65	211	1.9	21.8	3680	**F252_21.8 S3 M3SA4**	432	**F252_21.8 P90 BN90LA4**	433
67	204	2.9	21.1	6320	**F312_21.1 S3 M3SA4**	436	**F312_21.1 P90 BN90LA4**	437
70	195	1.1	20.2	2530	**F202_20.2 S3 M3SA4**	428	**F202_20.2 P90 BN90LA4**	429
76	180	2.2	18.6	3570	**F252_18.6 S3 M3SA4**	432	**F252_18.6 P90 BN90LA4**	433
76	179	3.4	18.5	6110	**F312_18.5 S3 M3SA4**	436	**F312_18.5 P90 BN90LA4**	437
78	175	1.2	18.1	2480	**F202_18.1 S3 M3SA4**	428	**F202_18.1 P90 BN90LA4**	429
85	161	2.5	16.6	3490	**F252_16.6 S3 M3SA4**	432	**F252_16.6 P90 BN90LA4**	433
95	143	1.4	14.8	2380	**F202_14.8 S3 M3SA4**	428	**F202_14.8 P90 BN90LA4**	429
97	140	2.9	14.5	3390	**F252_14.5 S3 M3SA4**	432	**F252_14.5 P90 BN90LA4**	433
109	125	3.2	13	3310	**F252_13.0 S3 M3SA4**	432	**F252_13.0 P90 BN90LA4**	433
126	108	1.6	11.2	2220	**F202_11.2 S3 M3SA4**	428	**F202_11.2 P90 BN90LA4**	429
144	94	0.9	9.8	1760	**F102_9.8 S3 M3SA4**	424	**F102_9.8 P90 BN90LA4**	425
151	90	2.9	9.4	3070	**F252_9.4 S3 M3SA4**	432	**F252_9.4 P90 BN90LA4**	433
161	84	1.8	8.7	2090	**F202_8.7 S3 M3SA4**	428	**F202_8.7 P90 BN90LA4**	429
164	83	1.0	8.6	1710	**F102_8.6 S3 M3SA4**	424	**F102_8.6 P90 BN90LA4**	425
168	81	3.2	8.4	2980	**F252_8.4 S3 M3SA4**	432	**F252_8.4 P90 BN90LA4**	433
180	76	1.9	7.8	2030	**F202_7.8 S3 M3SA4**	428	**F202_7.8 P90 BN90LA4**	429
190	72	1.1	7.4	1650	**F102_7.4 S3 M3SA4**	424	**F102_7.4 P90 BN90LA4**	425
220	62	2.1	6.4	1930	**F202_6.4 S3 M3SA4**	428	**F202_6.4 P90 BN90LA4**	429
243	56	1.4	11.5	1560	**F102_11.5 S2 M2SB2**	424	**F102_11.5 P90 BN90SA2**	425
249	55	2.6	11.2	1860	**F202_11.2 S2 M2SB2**	428	**F202_11.2 P90 BN90SA2**	429
287	48	1.5	9.8	1490	**F102_9.8 S2 M2SB2**	424	**F102_9.8 P90 BN90SA2**	425
321	42	2.9	8.7	1740	**F202_8.7 S2 M2SB2**	428	**F202_8.7 P90 BN90SA2**	429
326	42	1.6	8.6	1440	**F102_8.6 S2 M2SB2**	424	**F102_8.6 P90 BN90SA2**	425
357	38	3.0	7.8	1680	**F202_7.8 S2 M2SB2**	428	**F202_7.8 P90 BN90SA2**	429
378	36	1.7	7.4	1380	**F102_7.4 S2 M2SB2**	424	**F102_7.4 P90 BN90SA2**	425
437	31	3.3	6.4	1590	**F202_6.4 S2 M2SB2**	428	**F202_6.4 P90 BN90SA2**	429

2.2 kW

n2 min-1	M2 Nm	S	i	Rn2 N			IEC	
1.2	16347	0.9	1205	55000	**F904_1205 S3 M3LA4**	458	**F904_1205 P100 BN100LA4**	459
1.3	15090	0.9	1112	55000	**F904_1112 S3 M3LA4**	458	**F904_1112 P100 BN100LA4**	459
1.5	12348	1.1	910.2	55000	**F904_910.2 S3 M3LA4**	458	**F904_910.2 P100 BN100LA4**	459
1.8	10493	1.3	773.4	55000	**F904_773.4 S3 M3LA4**	458	**F904_773.4 P100 BN100LA4**	459
2.3	8287	1.0	610.9	45000	**F804_610.9 S3 M3LA4**	455	**F804_610.9 P100 BN100LA4**	456
2.3	8488	1.6	625.6	55000	**F904_625.6 S3 M3LA4**	458	**F904_625.6 P100 BN100LA4**	459
2.4	7835	1.8	577.5	55000	**F904_577.5 S3 M3LA4**	458	**F904_577.5 P100 BN100LA4**	459
2.5	7650	1.0	563.9	45000	**F804_563.9 S3 M3LA4**	455	**F804_563.9 P100 BN100LA4**	456
2.8	6723	2.1	495.6	55000	**F904_495.6 S3 M3LA4**	458	**F904_495.6 P100 BN100LA4**	459
2.9	6636	1.2	489.1	45000	**F804_489.1 S3 M3LA4**	455	**F804_489.1 P100 BN100LA4**	456
3.1	6125	1.3	451.5	45000	**F804_451.5 S3 M3LA4**	455	**F804_451.5 P100 BN100LA4**	456
3.1	6206	2.3	457.5	55000	**F904_457.5 S3 M3LA4**	458	**F904_457.5 P100 BN100LA4**	459
3.5	5474	0.9	403.5	35000	**F704_403.5 S3 M3LA4**	452	**F704_403.5 P100 BN100LA4**	453
3.7	5198	1.5	383.2	45000	**F804_383.2 S3 M3LA4**	455	**F804_383.2 P100 BN100LA4**	456
3.8	5053	1.0	372.5	35000	**F704_372.5 S3 M3LA4**	452	**F704_372.5 P100 BN100LA4**	453
3.9	4909	2.9	361.8	55000	**F904_361.8 S3 M3LA4**	458	**F904_361.8 P100 BN100LA4**	459
4.0	4798	1.7	353.7	45000	**F804_353.7 S3 M3LA4**	455	**F804_353.7 P100 BN100LA4**	456

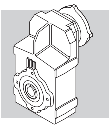

2.2 kW

n2 min-1	M2 Nm	S	i	Rn2 N			IEC	
4.6	4129	1.2	304.3	35000	**F704_304.3 S3 M3LA4**	452	**F704_304.3 P100 BN100LA4**	453
4.8	4025	2.0	296.7	45000	**F804_296.7 S3 M3LA4**	455	**F804_296.7 P100 BN100LA4**	456
4.8	3950	3.5	291.1	55000	**F904_291.1 S3 M3LA4**	458	**F904_291.1 P100 BN100LA4**	459
5.0	3811	1.3	280.9	35000	**F704_280.9 S3 M3LA4**	452	**F704_280.9 P100 BN100LA4**	453
5.1	3716	2.2	273.9	45000	**F804_273.9 S3 M3LA4**	455	**F804_273.9 P100 BN100LA4**	456
6.0	3182	1.6	234.6	35000	**F704_234.6 S3 M3LA4**	452	**F704_234.6 P100 BN100LA4**	453
6.5	3018	1.0	217.6	20000	**F603_217.6 S3 M3LA4**	448	**F603_217.6 P100 BN100LA4**	449
6.5	2938	1.7	216.5	35000	**F704_216.5 S3 M3LA4**	452	**F704_216.5 P100 BN100LA4**	453
6.5	2964	2.7	218.5	45000	**F804_218.5 S3 M3LA4**	455	**F804_218.5 P100 BN100LA4**	456
7.0	2792	1.0	201.4	20000	**F603_201.4 S3 M3LA4**	448	**F603_201.4 P100 BN100LA4**	449
7.2	2718	1.8	196.0	35000	**F703_196.0 S3 M3LA4**	452	**F703_196.0 P100 BN100LA4**	453
7.6	2577	1.1	185.9	20000	**F603_185.9 S3 M3LA4**	448	**F603_185.9 P100 BN100LA4**	449
7.6	2560	3.1	184.6	45000	**F803_184.6 S3 M3LA4**	455	**F803_184.6 P100 BN100LA4**	456
7.8	2509	2.0	180.9	35000	**F703_180.9 S3 M3LA4**	452	**F703_180.9 P100 BN100LA4**	453
8.5	2311	2.2	166.7	35000	**F703_166.7 S3 M3LA4**	452	**F703_166.7 P100 BN100LA4**	453
8.7	2258	1.3	162.9	20000	**F603_162.9 S3 M3LA4**	448	**F603_162.9 P100 BN100LA4**	449
9.2	2133	2.3	153.8	35000	**F703_153.8 S3 M3LA4**	452	**F703_153.8 P100 BN100LA4**	453
9.4	2085	1.4	150.4	20000	**F603_150.4 S3 M3LA4**	448	**F603_150.4 P100 BN100LA4**	449
10.6	1843	2.7	133.0	35000	**F703_133.0 S3 M3LA4**	452	**F703_133.0 P100 BN100LA4**	453
10.8	1809	1.6	130.5	20000	**F603_130.5 S3 M3LA4**	448	**F603_130.5 P100 BN100LA4**	449
10.9	1801	1.0	129.9	12000	**F513_129.9 S3 M3LA4**	444	**F513_129.9 P100 BN100LA4**	445
11.5	1702	2.9	122.7	35000	**F703_122.7 S3 M3LA4**	452	**F703_122.7 P100 BN100LA4**	453
11.7	1670	1.7	120.5	20000	**F603_120.5 S3 M3LA4**	448	**F603_120.5 P100 BN100LA4**	449
12.9	1520	3.3	109.6	35000	**F703_109.6 S3 M3LA4**	452	**F703_109.6 P100 BN100LA4**	453
13.3	1475	2.0	106.4	20000	**F603_106.4 S3 M3LA4**	448	**F603_106.4 P100 BN100LA4**	449
13.4	1457	1.2	105.1	12000	**F513_105.1 S3 M3LA4**	444	**F513_105.1 P100 BN100LA4**	445
14.4	1362	2.1	98.2	20000	**F603_98.2 S3 M3LA4**	448	**F603_98.2 P100 BN100LA4**	449
16.6	1177	0.9	84.9	8500	**F413_84.9 S3 M3LA4**	440	**F413_84.9 P100 BN100LA4**	441
16.8	1165	2.5	84.0	20000	**F603_84.0 S3 M3LA4**	448	**F603_84.0 P100 BN100LA4**	449
16.9	1154	1.6	83.2	12000	**F513_83.2 S3 M3LA4**	444	**F513_83.2 P100 BN100LA4**	445
18.2	1075	2.7	77.6	20000	**F603_77.6 S3 M3LA4**	448	**F603_77.6 P100 BN100LA4**	449
20.7	947	3.1	68.3	20000	**F603_68.3 S3 M3LA4**	448	**F603_68.3 P100 BN100LA4**	449
21.2	922	1.2	66.5	8500	**F413_66.5 S3 M3LA4**	440	**F413_66.5 P100 BN100LA4**	441
21.4	913	2.0	65.8	12000	**F513_65.8 S3 M3LA4**	444	**F513_65.8 P100 BN100LA4**	445
22.4	874	3.3	63.0	20000	**F603_63.0 S3 M3LA4**	448	**F603_63.0 P100 BN100LA4**	449
23.4	835	1.3	60.2	8500	**F413_60.2 S3 M3LA4**	440	**F413_60.2 P100 BN100LA4**	441
27.4	714	1.5	51.5	8500	**F413_51.5 S3 M3LA4**	440	**F413_51.5 P100 BN100LA4**	441
28.8	678	2.7	48.9	12000	**F513_48.9 S3 M3LA4**	444	**F513_48.9 P100 BN100LA4**	445
29.4	679	1.6	47.9	8500	**F412_47.9 S3 M3LA4**	440	**F412_47.9 P100 BN100LA4**	441
32	632	0.9	44.6	6500	**F312_44.6 S3 M3LA4**	436	**F312_44.6 P100 BN100LA4**	437
35	572	1.0	40.4	6500	**F312_40.4 S3 M3LA4**	436	**F312_40.4 P100 BN100LA4**	437
37	534	1.1	37.7	6500	**F312_37.7 S3 M3LA4**	436	**F312_37.7 P100 BN100LA4**	437
37	541	2.0	38.2	8500	**F412_38.2 S3 M3LA4**	440	**F412_38.2 P100 BN100LA4**	441
38	526	3.2	37.1	12000	**F512_37.1 S3 M3LA4**	444	**F512_37.1 P100 BN100LA4**	445
41	487	1.2	34.4	6490	**F312_34.4 S3 M3LA4**	436	**F312_34.4 P100 BN100LA4**	437
47	425	0.9	30.0	3300	**F252_30.0 S3 M3LA4**	432	**F252_30.0 P100 BN100LA4**	433
47	427	1.4	30.1	6360	**F312_30.1 S3 M3LA4**	436	**F312_30.1 P100 BN100LA4**	437
47	427	2.6	30.1	8500	**F412_30.1 S3 M3LA4**	440	**F412_30.1 P100 BN100LA4**	441
52	385	1.0	27.2	3300	**F252_27.2 S3 M3LA4**	432	**F252_27.2 P100 BN100LA4**	433
52	386	1.6	27.3	6250	**F312_27.3 S3 M3LA4**	436	**F312_27.3 P100 BN100LA4**	437
58	342	3.2	24.1	8400	**F412_24.1 S3 M3LA4**	440	**F412_24.1 P100 BN100LA4**	441

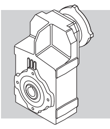

2.2 kW

n2 min-1	M2 Nm	S	i	Rn2 N			IEC	
59	336	1.2	23.8	3290	**F252_23.8 S3 M3LA4**	432	**F252_23.8 P100 BN100LA4**	433
60	331	1.8	23.4	6080	**F312_23.4 S3 M3LA4**	436	**F312_23.4 P100 BN100LA4**	437
65	309	1.3	21.8	3270	**F252_21.8 S3 M3LA4**	432	**F252_21.8 P100 BN100LA4**	433
67	299	2.0	21.1	5960	**F312_21.1 S3 M3LA4**	436	**F312_21.1 P100 BN100LA4**	437
76	264	1.5	18.6	3220	**F252_18.6 S3 M3LA4**	432	**F252_18.6 P100 BN100LA4**	433
76	262	2.3	18.5	5790	**F312_18.5 S3 M3LA4**	436	**F312_18.5 P100 BN100LA4**	437
84	238	2.5	16.8	5670	**F312_16.8 S3 M3LA4**	436	**F312_16.8 P100 BN100LA4**	437
85	235	1.7	16.6	3180	**F252_16.6 S3 M3LA4**	432	**F252_16.6 P100 BN100LA4**	433
95	210	1.0	14.8	2190	**F202_14.8 S3 M3LA4**	428	**F202_14.8 P100 BN100LA4**	429
97	205	2.0	14.5	3120	**F252_14.5 S3 M3LA4**	432	**F252_14.5 P100 BN100LA4**	433
101	198	3.0	13.9	5430	**F312_13.9 S3 M3LA4**	436	**F312_13.9 P100 BN100LA4**	437
109	184	2.2	13.0	3070	**F252_13.0 S3 M3LA4**	432	**F252_13.0 P100 BN100LA4**	433
111	180	3.3	12.7	5310	**F312_12.7 S3 M3LA4**	436	**F312_12.7 P100 BN100LA4**	437
126	159	1.1	11.2	2060	**F202_11.2 S3 M3LA4**	428	**F202_11.2 P100 BN100LA4**	429
133	150	2.6	10.6	2960	**F252_10.6 S3 M3LA4**	432	**F252_10.6 P100 BN100LA4**	433
151	133	2.0	9.4	2900	**F252_9.4 S3 M3LA4**	432	**F252_9.4 P100 BN100LA4**	433
156	128	3.1	9.0	4830	**F312_9.0 S3 M3LA4**	436	**F312_9.0 P100 BN100LA4**	437
161	124	1.3	8.7	1960	**F202_8.7 S3 M3LA4**	428	**F202_8.7 P100 BN100LA4**	429
168	119	2.2	8.4	2830	**F252_8.4 S3 M3LA4**	432	**F252_8.4 P100 BN100LA4**	433
171	117	3.3	8.2	4720	**F312_8.2 S3 M3LA4**	436	**F312_8.2 P100 BN100LA4**	437
180	111	1.3	7.8	1920	**F202_7.8 S3 M3LA4**	428	**F202_7.8 P100 BN100LA4**	429
205	97	2.6	6.9	2710	**F252_6.9 S3 M3LA4**	432	**F252_6.9 P100 BN100LA4**	433
220	91	1.4	6.4	1840	**F202_6.4 S3 M3LA4**	428	**F202_6.4 P100 BN100LA4**	429
247	81	1.0	11.5	1470	**F102_11.5 S3 M3SA2**	424	**F102_11.5 P90 BN90L2**	425
254	79	1.8	11.2	1780	**F202_11.2 S3 M3SA2**	428	**F202_11.2 P90 BN90L2**	429
292	68	1.1	9.8	1410	**F102_9.8 S3 M3SA2**	424	**F102_9.8 P90 BN90L2**	425
326	61	2.0	8.7	1670	**F202_8.7 S3 M3SA2**	428	**F202_8.7 P90 BN90L2**	429
332	60	1.1	8.6	1370	**F102_8.6 S3 M3SA2**	424	**F102_8.6 P90 BN90L2**	425
364	55	2.1	7.8	1630	**F202_7.8 S3 M3SA2**	428	**F202_7.8 P90 BN90L2**	429
385	52	1.2	7.4	1330	**F102_7.4 S3 M3SA2**	424	**F102_7.4 P90 BN90L2**	425
444	45	2.3	6.4	1540	**F202_6.4 S3 M3SA2**	428	**F202_6.4 P90 BN90L2**	429

3.0 kW

n2 min-1	M2 Nm	S	i	Rn2 N			IEC	
1.8	14309	1.0	773.4	55000	**F904_773.4 S3 M3LB4**	458	**F904_773.4 P100 BN100LB4**	459
2.3	11574	1.2	625.6	55000	**F904_625.6 S3 M3LB4**	458	**F904_625.6 P100 BN100LB4**	459
2.4	10684	1.3	577.5	55000	**F904_577.5 S3 M3LB4**	458	**F904_577.5 P100 BN100LB4**	459
2.8	9168	1.5	495.6	55000	**F904_495.6 S3 M3LB4**	458	**F904_495.6 P100 BN100LB4**	459
2.9	9049	0.9	489.1	45000	**F804_489.1 S3 M3LB4**	455	**F804_489.1 P100 BN100LB4**	456
3.1	8353	1.0	451.5	45000	**F804_451.5 S3 M3LB4**	455	**F804_451.5 P100 BN100LB4**	456
3.1	8463	1.7	457.5	55000	**F904_457.5 S3 M3LB4**	458	**F904_457.5 P100 BN100LB4**	459
3.7	7088	1.1	383.2	45000	**F804_383.2 S3 M3LB4**	455	**F804_383.2 P100 BN100LB4**	456
3.9	6694	2.1	361.8	55000	**F904_361.8 S3 M3LB4**	458	**F904_361.8 P100 BN100LB4**	459
4.0	6543	1.2	353.7	45000	**F804_353.7 S3 M3LB4**	455	**F804_353.7 P100 BN100LB4**	456
4.6	5630	0.9	304.3	35000	**F704_304.3 S3 M3LB4**	452	**F704_304.3 P100 BN100LB4**	453
4.8	5489	1.5	296.7	45000	**F804_296.7 S3 M3LB4**	455	**F804_296.7 P100 BN100LB4**	456
4.8	5386	2.6	291.1	55000	**F904_291.1 S3 M3LB4**	458	**F904_291.1 P100 BN100LB4**	459

3.0 kW

n_2 min-1	M_2 Nm	S	i	R_{n2} N			IEC	
5.0	5197	1.0	280.9	35000	**F704_280.9 S3 M3LB4**	452	**F704_280.9 P100 BN100LB4**	453
5.1	5067	1.6	273.9	45000	**F804_273.9 S3 M3LB4**	455	**F804_273.9 P100 BN100LB4**	456
5.2	4971	2.8	268.7	55000	**F904_268.7 S3 M3LB4**	458	**F904_268.7 P100 BN100LB4**	459
6.0	4340	1.2	234.6	35000	**F704_234.6 S3 M3LB4**	452	**F704_234.6 P100 BN100LB4**	453
6.1	4281	3.3	231.4	55000	**F904_231.4 S3 M3LB4**	458	**F904_231.4 P100 BN100LB4**	459
6.5	4006	1.2	216.5	35000	**F704_216.5 S3 M3LB4**	452	**F704_216.5 P100 BN100LB4**	453
6.5	4042	2.0	218.5	45000	**F804_218.5 S3 M3LB4**	455	**F804_218.5 P100 BN100LB4**	456
6.6	3951	3.5	213.6	55000	**F904_213.6 S3 M3LB4**	458	**F904_213.6 P100 BN100LB4**	459
7.2	3706	1.3	196.0	35000	**F703_196.0 S3 M3LB4**	452	**F703_196.0 P100 BN100LB4**	453
7.6	3490	2.3	184.6	45000	**F803_184.6 S3 M3LB4**	455	**F803_184.6 P100 BN100LB4**	456
7.8	3421	1.5	180.9	35000	**F703_180.9 S3 M3LB4**	452	**F703_180.9 P100 BN100LB4**	453
8.5	3151	1.6	166.7	35000	**F703_166.7 S3 M3LB4**	452	**F703_166.7 P100 BN100LB4**	453
8.7	3080	0.9	162.9	20000	**F603_162.9 S3 M3LB4**	448	**F603_162.9 P100 BN100LB4**	449
8.8	3029	2.6	160.2	45000	**F803_160.2 S3 M3LB4**	455	**F803_160.2 P100 BN100LB4**	456
9.2	2909	1.7	153.8	35000	**F703_153.8 S3 M3LB4**	452	**F703_153.8 P100 BN100LB4**	453
9.4	2843	1.0	150.4	20000	**F603_150.4 S3 M3LB4**	448	**F603_150.4 P100 BN100LB4**	449
9.5	2796	2.9	147.9	45000	**F803_147.9 S3 M3LB4**	455	**F803_147.9 P100 BN100LB4**	456
10.6	2514	2.0	133.0	35000	**F703_133.0 S3 M3LB4**	452	**F703_133.0 P100 BN100LB4**	453
10.6	2509	3.2	132.7	45000	**F803_132.7 S3 M3LB4**	455	**F803_132.7 P100 BN100LB4**	456
10.8	2467	1.2	130.5	20000	**F603_130.5 S3 M3LB4**	448	**F603_130.5 P100 BN100LB4**	449
11.5	2320	2.2	122.7	35000	**F703_122.7 S3 M3LB4**	452	**F703_122.7 P100 BN100LB4**	453
11.5	2316	3.5	122.5	45000	**F803_122.5 S3 M3LB4**	455	**F803_122.5 P100 BN100LB4**	456
11.7	2277	1.3	120.5	20000	**F603_120.5 S3 M3LB4**	448	**F603_120.5 P100 BN100LB4**	449
12.9	2072	2.4	109.6	35000	**F703_109.6 S3 M3LB4**	452	**F703_109.6 P100 BN100LB4**	453
13.3	2011	1.4	106.4	20000	**F603_106.4 S3 M3LB4**	448	**F603_106.4 P100 BN100LB4**	449
13.4	1987	0.9	105.1	12000	**F513_105.1 S3 M3LB4**	444	**F513_105.1 P100 BN100LB4**	445
13.9	1913	2.6	101.2	35000	**F703_101.2 S3 M3LB4**	452	**F703_101.2 P100 BN100LB4**	453
14.4	1857	1.6	98.2	20000	**F603_98.2 S3 M3LB4**	448	**F603_98.2 P100 BN100LB4**	449
15.2	1749	2.9	92.5	35000	**F703_92.5 S3 M3LB4**	452	**F703_92.5 P100 BN100LB4**	453
16.5	1614	3.1	85.4	35000	**F703_85.4 S3 M3LB4**	452	**F703_85.4 P100 BN100LB4**	453
16.8	1588	1.8	84.0	20000	**F603_84.0 S3 M3LB4**	448	**F603_84.0 P100 BN100LB4**	449
16.9	1574	1.1	83.2	12000	**F513_83.2 S3 M3LB4**	444	**F513_83.2 P100 BN100LB4**	445
18.2	1466	2.0	77.6	20000	**F603_77.6 S3 M3LB4**	448	**F603_77.6 P100 BN100LB4**	449
20.7	1291	2.2	68.3	20000	**F603_68.3 S3 M3LB4**	448	**F603_68.3 P100 BN100LB4**	449
21.4	1245	1.4	65.8	12000	**F513_65.8 S3 M3LB4**	444	**F513_65.8 P100 BN100LB4**	445
22.4	1192	2.4	63.0	20000	**F603_63.0 S3 M3LB4**	448	**F603_63.0 P100 BN100LB4**	449
23.4	1139	1.0	60.2	8500	**F413_60.2 S3 M3LB4**	440	**F413_60.2 P100 BN100LB4**	441
27.2	980	3.0	51.8	20000	**F603_51.8 S3 M3LB4**	448	**F603_51.8 P100 BN100LB4**	449
27.4	974	1.1	51.5	8500	**F413_51.5 S3 M3LB4**	440	**F413_51.5 P100 BN100LB4**	441
28.8	925	1.9	48.9	12000	**F513_48.9 S3 M3LB4**	444	**F513_48.9 P100 BN100LB4**	445
29.4	926	1.2	47.9	8500	**F412_47.9 S3 M3LB4**	440	**F412_47.9 P100 BN100LB4**	441
29.5	905	3.2	47.8	20000	**F603_47.8 S3 M3LB4**	448	**F603_47.8 P100 BN100LB4**	449
37	737	1.5	38.2	8500	**F412_38.2 S3 M3LB4**	440	**F412_38.2 P100 BN100LB4**	441
38	717	2.4	37.1	11800	**F512_37.1 S3 M3LB4**	444	**F512_37.1 P100 BN100LB4**	445
41	664	0.9	34.4	5810	**F312_34.4 S3 M3LB4**	436	**F312_34.4 P100 BN100LB4**	437
47	582	1.0	30.1	5770	**F312_30.1 S3 M3LB4**	436	**F312_30.1 P100 BN100LB4**	437
47	582	1.9	30.1	8290	**F412_30.1 S3 M3LB4**	440	**F412_30.1 P100 BN100LB4**	441
47	580	2.9	30.0	11200	**F512_30.0 S3 M3LB4**	444	**F512_30.0 P100 BN100LB4**	445
52	527	1.1	27.3	5720	**F312_27.3 S3 M3LB4**	436	**F312_27.3 P100 BN100LB4**	437
58	466	2.4	24.1	7960	**F412_24.1 S3 M3LB4**	440	**F412_24.1 P100 BN100LB4**	441
60	452	1.3	23.4	5620	**F312_23.4 S3 M3LB4**	436	**F312_23.4 P100 BN100LB4**	437

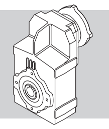

3.0 kW

n2 min-1	M2 Nm	S	i	Rn2 N			IEC	
65	421	0.9	21.8	2800	**F252_21.8 S3 M3LB4**	432	**F252_21.8 P100 BN100LB4**	433
67	408	1.5	21.1	5540	**F312_21.1 S3 M3LB4**	436	**F312_21.1 P100 BN100LB4**	437
75	365	3.0	18.9	7560	**F412_18.9 S3 M3LB4**	440	**F412_18.9 P100 BN100LB4**	441
76	359	1.1	18.6	2830	**F252_18.6 S3 M3LB4**	432	**F252_18.6 P100 BN100LB4**	433
76	357	1.7	18.5	5430	**F312_18.5 S3 M3LB4**	436	**F312_18.5 P100 BN100LB4**	437
82	331	3.2	17.1	7400	**F412_17.1 S3 M3LB4**	440	**F412_17.1 P100 BN100LB4**	441
84	324	1.8	16.8	5340	**F312_16.8 S3 M3LB4**	436	**F312_16.8 P100 BN100LB4**	437
85	321	1.2	16.6	2830	**F252_16.6 S3 M3LB4**	432	**F252_16.6 P100 BN100LB4**	433
97	279	1.4	14.5	2810	**F252_14.5 S3 M3LB4**	432	**F252_14.5 P100 BN100LB4**	433
101	269	2.2	13.9	5150	**F312_13.9 S3 M3LB4**	436	**F312_13.9 P100 BN100LB4**	437
109	251	1.6	13	2790	**F252_13.0 S3 M3LB4**	432	**F252_13.0 P100 BN100LB4**	433
111	246	2.4	12.7	5060	**F312_12.7 S3 M3LB4**	436	**F312_12.7 P100 BN100LB4**	437
131	208	2.9	10.7	4880	**F312_10.7 S3 M3LB4**	436	**F312_10.7 P100 BN100LB4**	437
133	205	1.9	10.6	2730	**F252_10.6 S3 M3LB4**	432	**F252_10.6 P100 BN100LB4**	433
151	181	1.5	9.4	2710	**F252_9.4 S3 M3LB4**	432	**F252_9.4 P100 BN100LB4**	433
156	174	2.2	9.0	4650	**F312_9.0 S3 M3LB4**	436	**F312_9.0 P100 BN100LB4**	437
161	169	0.9	8.7	1820	**F202_8.7 S3 M3LB4**	428	**F202_8.7 P100 BN100LB4**	429
168	162	1.6	8.4	2660	**F252_8.4 S3 M3LB4**	432	**F252_8.4 P100 BN100LB4**	433
171	159	2.5	8.2	4550	**F312_8.2 S3 M3LB4**	436	**F312_8.2 P100 BN100LB4**	437
180	151	1.0	7.8	1790	**F202_7.8 S3 M3LB4**	428	**F202_7.8 P100 BN100LB4**	429
203	134	2.9	6.9	4360	**F312_6.9 S3 M3LB4**	436	**F312_6.9 P100 BN100LB4**	437
205	133	1.9	6.9	2560	**F252_6.9 S3 M3LB4**	432	**F252_6.9 P100 BN100LB4**	433
220	124	1.0	6.4	1730	**F202_6.4 S3 M3LB4**	428	**F202_6.4 P100 BN100LB4**	429
220	124	2.9	13.0	2510	**F252_13.0 S3 M3LA2**	432	**F252_13.0 P100 BN100L2**	433
255	107	1.3	11.2	1680	**F202_11.2 S3 M3LA2**	428	**F202_11.2 P100 BN100L2**	429
269	101	3.2	10.6	2410	**F252_10.6 S3 M3LA2**	432	**F252_10.6 P100 BN100L2**	433
306	89	3.0	9.4	2350	**F252_9.4 S3 M3LA2**	432	**F252_9.4 P100 BN100L2**	433
328	83	1.5	8.7	1600	**F202_8.7 S3 M3LA2**	428	**F202_8.7 P100 BN100L2**	429
341	80	3.3	8.4	2290	**F252_8.4 S3 M3LA2**	432	**F252_8.4 P100 BN100L2**	433
365	75	1.5	7.8	1560	**F202_7.8 S3 M3LA2**	428	**F202_7.8 P100 BN100L2**	429
446	61	1.7	6.4	1480	**F202_6.4 S3 M3LA2**	428	**F202_6.4 P100 BN100L2**	429

4.0 kW

n2 min-1	M2 Nm	S	i	Rn2 N			IEC	
2.2	15542	0.9	625.6	55000	**F904_625.6 S3 M3LC4**	458	**F904_625.6 P112 BN112M4**	459
2.4	14347	1.0	577.5	55000	**F904_577.5 S3 M3LC4**	458	**F904_577.5 P112 BN112M4**	459
2.8	12311	1.1	495.6	55000	**F904_495.6 S3 M3LC4**	458	**F904_495.6 P112 BN112M4**	459
3.1	11364	1.2	457.5	55000	**F904_457.5 S3 M3LC4**	458	**F904_457.5 P112 BN112M4**	459
3.9	8989	1.6	361.8	55000	**F904_361.8 S3 M3LC4**	458	**F904_361.8 P112 BN112M4**	459
4.0	8786	0.9	353.7	45000	**F804_353.7 S3 M3LC4**	455	**F804_353.7 P112 BN112M4**	456
4.7	7371	1.1	296.7	45000	**F804_296.7 S3 M3LC4**	455	**F804_296.7 P112 BN112M4**	456
4.8	7232	1.9	291.1	55000	**F904_291.1 S3 M3LC4**	458	**F904_291.1 P112 BN112M4**	459
5.1	6804	1.2	273.9	45000	**F804_273.9 S3 M3LC4**	455	**F804_273.9 P112 BN112M4**	456
5.2	6676	2.1	268.7	55000	**F904_268.7 S3 M3LC4**	458	**F904_268.7 P112 BN112M4**	459
6.0	5827	0.9	234.6	35000	**F704_234.6 S3 M3LC4**	452	**F704_234.6 P112 BN112M4**	453
6.1	5748	2.4	231.4	55000	**F904_231.4 S3 M3LC4**	458	**F904_231.4 P112 BN112M4**	459
6.4	5428	1.5	218.5	45000	**F804_218.5 S3 M3LC4**	455	**F804_218.5 P112 BN112M4**	456

4.0 kW

n2 min-1	M2 Nm	S	i	Rn2 N	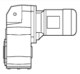		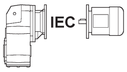	
6.5	5379	0.9	216.5	35000	**F704_216.5 S3 M3LC4**	452	**F704_216.5 P112 BN112M4**	453
6.6	5306	2.6	213.6	55000	**F904_213.6 S3 M3LC4**	458	**F904_213.6 P112 BN112M4**	459
7.1	4977	1.0	196.0	35000	**F703_196.0 S3 M3LC4**	452	**F703_196.0 P112 BN112M4**	453
7.2	4929	2.8	194.2	55000	**F903_194.2 S3 M3LC4**	458	**F903_194.2 P112 BN112M4**	459
7.6	4687	1.7	184.6	45000	**F803_184.6 S3 M3LC4**	455	**F803_184.6 P112 BN112M4**	456
7.7	4594	1.1	180.9	35000	**F703_180.9 S3 M3LC4**	452	**F703_180.9 P112 BN112M4**	453
7.8	4550	3.1	179.2	55000	**F903_179.2 S3 M3LC4**	458	**F903_179.2 P112 BN112M4**	459
8.4	4232	1.2	166.7	35000	**F703_166.7 S3 M3LC4**	452	**F703_166.7 P112 BN112M4**	453
8.6	4134	3.4	162.8	55000	**F903_162.8 S3 M3LC4**	458	**F903_162.8 P112 BN112M4**	459
8.7	4068	2.0	160.2	45000	**F803_160.2 S3 M3LC4**	455	**F803_160.2 P112 BN112M4**	456
9.1	3906	1.3	153.8	35000	**F703_153.8 S3 M3LC4**	452	**F703_153.8 P112 BN112M4**	453
9.5	3755	2.1	147.9	45000	**F803_147.9 S3 M3LC4**	455	**F803_147.9 P112 BN112M4**	456
10.5	3376	1.5	133.0	35000	**F703_133.0 S3 M3LC4**	452	**F703_133.0 P112 BN112M4**	453
10.6	3369	2.4	132.7	45000	**F803_132.7 S3 M3LC4**	455	**F803_132.7 P112 BN112M4**	456
11.4	3116	1.6	122.7	35000	**F703_122.7 S3 M3LC4**	452	**F703_122.7 P112 BN112M4**	453
11.4	3110	2.6	122.5	45000	**F803_122.5 S3 M3LC4**	455	**F803_122.5 P112 BN112M4**	456
11.6	3058	0.9	120.5	20000	**F603_120.5 S3 M3LC4**	448	**F603_120.5 P112 BN112M4**	449
12.3	2888	2.8	113.8	45000	**F803_113.8 S3 M3LC4**	455	**F803_113.8 P112 BN112M4**	456
12.8	2783	1.8	109.6	35000	**F703_109.6 S3 M3LC4**	452	**F703_109.6 P112 BN112M4**	453
13.2	2701	1.1	106.4	20000	**F603_106.4 S3 M3LC4**	448	**F603_106.4 P112 BN112M4**	449
13.8	2569	1.9	101.2	35000	**F703_101.2 S3 M3LC4**	452	**F703_101.2 P112 BN112M4**	453
14.3	2493	1.2	98.2	20000	**F603_98.2 S3 M3LC4**	448	**F603_98.2 P112 BN112M4**	449
15.1	2348	2.1	92.5	35000	**F703_92.5 S3 M3LC4**	452	**F703_92.5 P112 BN112M4**	453
16.4	2168	2.3	85.4	35000	**F703_85.4 S3 M3LC4**	452	**F703_85.4 P112 BN112M4**	453
16.7	2133	1.4	84.0	20000	**F603_84.0 S3 M3LC4**	448	**F603_84.0 P112 BN112M4**	449
18.1	1969	1.5	77.6	20000	**F603_77.6 S3 M3LC4**	448	**F603_77.6 P112 BN112M4**	449
20.5	1734	1.7	68.3	20000	**F603_68.3 S3 M3LC4**	448	**F603_68.3 P112 BN112M4**	449
21.3	1672	1.1	65.8	12000	**F513_65.8 S3 M3LC4**	444	**F513_65.8 P112 BN112M4**	445
22.2	1600	1.8	63.0	20000	**F603_63.0 S3 M3LC4**	448	**F603_63.0 P112 BN112M4**	449
27.0	1316	2.2	51.8	20000	**F603_51.8 S3 M3LC4**	448	**F603_51.8 P112 BN112M4**	449
28.6	1242	1.4	48.9	11600	**F513_48.9 S3 M3LC4**	444	**F513_48.9 P112 BN112M4**	445
29.3	1215	2.4	47.8	20000	**F603_47.8 S3 M3LC4**	448	**F603_47.8 P112 BN112M4**	449
33	1069	2.7	42.1	20000	**F603_42.1 S3 M3LC4**	448	**F603_42.1 P112 BN112M4**	449
36	986	2.9	38.8	20000	**F603_38.8 S3 M3LC4**	448	**F603_38.8 P112 BN112M4**	449
37	990	1.1	38.2	7720	**F412_38.2 S3 M3LC4**	440	**F412_38.2 P112 BN112M4**	441
38	963	1.8	37.1	11200	**F512_37.1 S3 M3LC4**	444	**F512_37.1 P112 BN112M4**	445
46	781	1.4	30.1	7610	**F412_30.1 S3 M3LC4**	440	**F412_30.1 P112 BN112M4**	441
47	779	2.2	30.0	10700	**F512_30.0 S3 M3LC4**	444	**F512_30.0 P112 BN112M4**	445
55	645	2.9	25.4	20000	**F603_25.4 S3 M3LC4**	448	**F603_25.4 P112 BN112M4**	449
58	625	1.8	24.1	7420	**F412_24.1 S3 M3LC4**	440	**F412_24.1 P112 BN112M4**	441
59	617	2.7	23.8	10200	**F512_23.8 S3 M3LC4**	444	**F512_23.8 P112 BN112M4**	445
60	607	1.0	23.4	5040	**F312_23.4 S3 M3LC4**	436	**F312_23.4 P112 BN112M4**	437
60	596	3.2	23.5	20000	**F603_23.5 S3 M3LC4**	448	**F603_23.5 P112 BN112M4**	449
66	548	1.1	21.1	5020	**F312_21.1 S3 M3LC4**	436	**F312_21.1 P112 BN112M4**	437
74	490	2.2	18.9	7150	**F412_18.9 S3 M3LC4**	440	**F412_18.9 P112 BN112M4**	441
74	488	3.2	18.8	9640	**F512_18.8 S3 M3LC4**	444	**F512_18.8 P112 BN112M4**	445
76	479	1.3	18.5	4980	**F312_18.5 S3 M3LC4**	436	**F312_18.5 P112 BN112M4**	437
82	444	2.4	17.1	7030	**F412_17.1 S3 M3LC4**	440	**F412_17.1 P112 BN112M4**	441
83	436	1.4	16.8	4930	**F312_16.8 S3 M3LC4**	436	**F312_16.8 P112 BN112M4**	437
84	431	0.9	16.6	2380	**F252_16.6 S3 M3LC4**	432	**F252_16.6 P112 BN112M4**	433
96	379	2.7	14.6	6820	**F412_14.6 S3 M3LC4**	440	**F412_14.6 P112 BN112M4**	441

4.0 kW

n_2 min^{-1}	M_2 Nm	S	i	R_{n2} N			IEC	
97	375	1.1	14.5	2420	**F252_14.5 S3 M3LC4**	432	**F252_14.5 P112 BN112M4**	433
100	362	1.7	13.9	4820	**F312_13.9 S3 M3LC4**	436	**F312_13.9 P112 BN112M4**	437
108	337	1.2	13.0	2440	**F252_13.0 S3 M3LC4**	432	**F252_13.0 P112 BN112M4**	433
110	330	1.8	12.7	4750	**F312_12.7 S3 M3LC4**	436	**F312_12.7 P112 BN112M4**	437
130	279	2.2	10.7	4620	**F312_10.7 S3 M3LC4**	436	**F312_10.7 P112 BN112M4**	437
130	279	3.2	10.8	6380	**F412_10.8 S3 M3LC4**	440	**F412_10.8 P112 BN112M4**	441
132	276	1.4	10.6	2450	**F252_10.6 S3 M3LC4**	432	**F252_10.6 P112 BN112M4**	433
150	243	1.1	9.4	2470	**F252_9.4 S3 M3LC4**	432	**F252_9.4 P112 BN112M4**	433
153	237	3.0	9.1	6160	**F412_9.1 S3 M3LC4**	440	**F412_9.1 P112 BN112M4**	441
155	234	1.7	9.0	4420	**F312_9.0 S3 M3LC4**	436	**F312_9.0 P112 BN112M4**	437
167	218	1.2	8.4	2450	**F252_8.4 S3 M3LC4**	432	**F252_8.4 P112 BN112M4**	433
170	213	1.8	8.2	4350	**F312_8.2 S3 M3LC4**	436	**F312_8.2 P112 BN112M4**	437
201	180	2.2	6.9	4200	**F312_6.9 S3 M3LC4**	436	**F312_6.9 P112 BN112M4**	437
204	178	1.4	6.9	2390	**F252_6.9 S3 M3LC4**	432	**F252_6.9 P112 BN112M4**	433
206	176	3.2	13.9	4200	**F312_13.9 S3 M3LB2**	436	**F312_13.9 P100 BN100LB2**	437
221	164	2.2	13.0	2340	**F252_13.0 S3 M3LB2**	432	**F252_13.0 P112 BN112M2**	433
226	161	3.4	12.7	4120	**F312_12.7 S3 M3LB2**	436	**F312_12.7 P100 BN100LB2**	437
255	142	1.0	11.2	1570	**F202_11.2 S3 M3LB2**	428	**F202_11.2 P100 BN100LB2**	429
270	134	2.4	10.6	2270	**F252_10.6 S3 M3LB2**	432	**F252_10.6 P112 BN112M2**	433
307	118	2.2	9.4	2230	**F252_9.4 S3 M3LB2**	432	**F252_9.4 P112 BN112M2**	433
318	114	3.4	9.0	3760	**F312_9.0 S3 M3LB2**	436	**F312_9.0 P100 BN100LB2**	437
329	110	1.1	8.7	1510	**F202_8.7 S3 M3LB2**	428	**F202_8.7 P100 BN100LB2**	429
342	106	2.4	8.4	2190	**F252_8.4 S3 M3LB2**	432	**F252_8.4 P112 BN112M2**	433
366	99	1.2	7.8	1480	**F202_7.8 S3 M3LB2**	428	**F202_7.8 P100 BN100LB2**	429
418	87	2.7	6.9	2090	**F252_6.9 S3 M3LB2**	432	**F252_6.9 P112 BN112M2**	433
448	81	1.3	6.4	1420	**F202_6.4 S3 M3LB2**	428	**F202_6.4 P100 BN100LB2**	429

5.5 kW

n_2 min^{-1}	M_2 Nm	S	i	R_{n2} N			IEC	
2.9	16458	0.9	495.6	55000	**F904_495.6 S4 M4SA4**	458	**F904_495.6 P132 BN132S4**	459
3.1	15192	0.9	457.5	55000	**F904_457.5 S4 M4SA4**	458	**F904_457.5 P132 BN132S4**	459
4.0	12017	1.2	361.8	55000	**F904_361.8 S4 M4SA4**	458	**F904_361.8 P132 BN132S4**	459
4.9	9668	1.4	291.1	55000	**F904_291.1 S4 M4SA4**	458	**F904_291.1 P132 BN132S4**	459
5.3	9096	0.9	273.9	45000	**F804_273.9 S4 M4SA4**	455	**F804_273.9 P132 BN132S4**	456
5.4	8925	1.6	268.7	55000	**F904_268.7 S4 M4SA4**	458	**F904_268.7 P132 BN132S4**	459
6.2	7685	1.8	231.4	55000	**F904_231.4 S4 M4SA4**	458	**F904_231.4 P132 BN132S4**	459
6.6	7256	1.1	218.5	45000	**F804_218.5 S4 M4SA4**	455	**F804_218.5 P132 BN132S4**	456
6.7	7093	2	213.6	55000	**F904_213.6 S4 M4SA4**	458	**F904_213.6 P132 BN132S4**	459
7.4	6590	2.1	194.2	55000	**F903_194.2 S4 M4SA4**	458	**F903_194.2 P132 BN132S4**	459
7.8	6266	1.3	184.6	45000	**F803_184.6 S4 M4SA4**	455	**F803_184.6 P132 BN132S4**	456
8.0	6083	2.3	179.2	55000	**F903_179.2 S4 M4SA4**	458	**F903_179.2 P132 BN132S4**	459
8.8	5527	2.5	162.8	55000	**F903_162.8 S4 M4SA4**	458	**F903_162.8 P132 BN132S4**	459
9.0	5438	1.5	160.2	45000	**F803_160.2 S4 M4SA4**	455	**F803_160.2 P132 BN132S4**	456
9.4	5222	1.0	153.8	35000	**F703_153.8 S4 M4SA4**	452	**F703_153.8 P132 BN132S4**	453
9.6	5101	2.7	150.3	55000	**F903_150.3 S4 M4SA4**	458	**F903_150.3 P132 BN132S4**	459
9.7	5020	1.6	147.9	45000	**F803_147.9 S4 M4SA4**	455	**F803_147.9 P132 BN132S4**	456
10.5	4661	3.0	137.3	55000	**F903_137.3 S4 M4SA4**	458	**F903_137.3 P132 BN132S4**	459

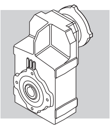

5.5 kW

n2 min-1	M2 Nm	S	i	Rn2 N	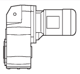		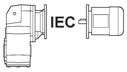	
10.8	4513	1.1	133	35000	**F703_133.0 S4 M4SA4**	452	**F703_133.0 P132 BN132S4**	453
10.9	4504	1.8	132.7	45000	**F803_132.7 S4 M4SA4**	455	**F803_132.7 P132 BN132S4**	456
11.4	4303	3.3	126.8	55000	**F903_126.8 S4 M4SA4**	458	**F903_126.8 P132 BN132S4**	459
11.7	4165	1.2	122.7	35000	**F703_122.7 S4 M4SA4**	452	**F703_122.7 P132 BN132S4**	453
11.8	4157	1.9	122.5	45000	**F803_122.5 S4 M4SA4**	455	**F803_122.5 P132 BN132S4**	456
12.7	3861	2.1	113.8	45000	**F803_113.8 S4 M4SA4**	455	**F803_113.8 P132 BN132S4**	456
13.1	3720	1.3	109.6	35000	**F703_109.6 S4 M4SA4**	452	**F703_109.6 P132 BN132S4**	453
14.2	3434	1.5	101.2	35000	**F703_101.2 S4 M4SA4**	452	**F703_101.2 P132 BN132S4**	453
15.6	3139	1.6	92.5	35000	**F703_92.5 S4 M4SA4**	452	**F703_92.5 P132 BN132S4**	453
15.6	3133	2.6	92.3	45000	**F803_92.3 S4 M4SA4**	455	**F803_92.3 P132 BN132S4**	456
16.9	2898	1.7	85.4	35000	**F703_85.4 S4 M4SA4**	452	**F703_85.4 P132 BN132S4**	453
16.9	2892	2.8	85.2	45000	**F803_85.2 S4 M4SA4**	455	**F803_85.2 P132 BN132S4**	456
17.1	2852	1.0	84	20000	**F603_84.0 S4 M4SA4**	448	**F603_84.0 P132 BN132S4**	449
18.6	2632	1.1	77.6	20000	**F603_77.6 S4 M4SA4**	448	**F603_77.6 P132 BN132S4**	449
18.9	2588	3.1	76.3	45000	**F803_76.3 S4 M4SA4**	455	**F803_76.3 P132 BN132S4**	456
19.6	2497	2.0	73.6	35000	**F703_73.6 S4 M4SA4**	452	**F703_73.6 P132 BN132S4**	453
20.5	2389	3.3	70.4	45000	**F803_70.4 S4 M4SA4**	455	**F803_70.4 P132 BN132S4**	456
21.1	2317	1.3	68.3	20000	**F603_68.3 S4 M4SA4**	448	**F603_68.3 P132 BN132S4**	449
21.2	2305	2.2	67.9	35000	**F703_67.9 S4 M4SA4**	452	**F703_67.9 P132 BN132S4**	453
22.8	2139	1.4	63	20000	**F603_63.0 S4 M4SA4**	448	**F603_63.0 P132 BN132S4**	449
23.0	2121	2.4	62.5	35000	**F703_62.5 S4 M4SA4**	452	**F703_62.5 P132 BN132S4**	453
25.0	1958	2.6	57.7	35000	**F703_57.7 S4 M4SA4**	452	**F703_57.7 P132 BN132S4**	453
27.8	1759	1.6	51.8	20000	**F603_51.8 S4 M4SA4**	448	**F603_51.8 P132 BN132S4**	449
29.4	1660	1.1	48.9	10300	**F513_48.9 S4 M4SA4**	444	**F513_48.9 P132 BN132S4**	445
29.4	1662	3	49.0	35000	**F703_49.0 S4 M4SA4**	452	**F703_49.0 P132 BN132S4**	453
30.0	1624	1.8	47.8	20000	**F603_47.8 S4 M4SA4**	448	**F603_47.8 P132 BN132S4**	449
32	1534	3.3	45.2	34300	**F703_45.2 S4 M4SA4**	452	**F703_45.2 P132 BN132S4**	453
34	1428	2.0	42.1	20000	**F603_42.1 S4 M4SA4**	448	**F603_42.1 P132 BN132S4**	449
37	1319	2.2	38.8	20000	**F603_38.8 S4 M4SA4**	448	**F603_38.8 P132 BN132S4**	449
39	1288	1.3	37.1	10300	**F512_37.1 S4 M4SA4**	444	**F512_37.1 P132 BN132S4**	445
45	1089	2.7	32.1	20000	**F603_32.1 S4 M4SA4**	448	**F603_32.1 P132 BN132S4**	449
48	1044	1.1	30.1	6580	**F412_30.1 S4 M4SA4**	440	**F412_30.1 P132 BN132S4**	441
48	1041	1.6	30	9950	**F512_30.0 S4 M4SA4**	444	**F512_30.0 P132 BN132S4**	445
49	1005	2.9	29.6	20000	**F603_29.6 S4 M4SA4**	448	**F603_29.6 P132 BN132S4**	449
57	863	2.2	25.4	20000	**F603_25.4 S4 M4SA4**	448	**F603_25.4 P132 BN132S4**	449
60	836	1.3	24.1	6580	**F412_24.1 S4 M4SA4**	440	**F412_24.1 P132 BN132S4**	441
61	825	2.0	23.8	9560	**F512_23.8 S4 M4SA4**	444	**F512_23.8 P132 BN132S4**	445
61	796	2.4	23.5	20000	**F603_23.5 S4 M4SA4**	448	**F603_23.5 P132 BN132S4**	449
70	701	2.7	20.7	20000	**F603_20.7 S4 M4SA4**	448	**F603_20.7 P132 BN132S4**	449
76	655	1.7	18.9	6480	**F412_18.9 S4 M4SA4**	440	**F412_18.9 P132 BN132S4**	441
76	647	2.9	19.1	20000	**F603_19.1 S4 M4SA4**	448	**F603_19.1 P132 BN132S4**	449
77	653	2.4	18.8	9110	**F512_18.8 S4 M4SA4**	444	**F512_18.8 P132 BN132S4**	445
84	593	1.8	17.1	6410	**F412_17.1 S4 M4SA4**	440	**F412_17.1 P132 BN132S4**	441
98	507	2.0	14.6	6280	**F412_14.6 S4 M4SA4**	440	**F412_14.6 P132 BN132S4**	441
103	485	2.9	14.0	8520	**F512_14.0 S4 M4SA4**	444	**F512_14.0 P132 BN132S4**	445
130	385	3.5	11.1	8050	**F512_11.1 S4 M4SA4**	444	**F512_11.1 P132 BN132S4**	445
134	373	2.4	10.8	5970	**F412_10.8 S4 M4SA4**	440	**F412_10.8 P132 BN132S4**	441
158	317	2.2	9.1	5810	**F412_9.1 S4 M4SA4**	440	**F412_9.1 P132 BN132S4**	441
159	314	3.5	9.1	7590	**F512_9.1 S4 M4SA4**	444	**F512_9.1 P132 BN132S4**	445
198	253	3.3	14.6	5510	**F412_14.6 S4 M4SA2**	440	**F412_14.6 P132 BN132SA2**	441
214	233	2.7	6.7	5430	**F412_6.7 S4 M4SA4**	440	**F412_6.7 P132 BN132S4**	441

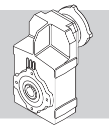

5.5 kW

n2 min-1	M2 Nm	S	i	Rn2 N			IEC	
268	186	3.9	10.8	5120	**F412_10.8 S4 M4SA2**	440	**F412_10.8 P132 BN132SA2**	441
316	158	3.9	9.1	4930	**F412_9.1 S4 M4SA2**	440	**F412_9.1 P132 BN132SA2**	441

7.5 kW

n2 min-1	M2 Nm	S	i	Rn2 N			IEC	
4.0	16387	0.9	361.8	55000	**F904_361.8 S4 M4LA4**	458	**F904_361.8 P132 BN132MA4**	459
4.9	13184	1.1	291.1	55000	**F904_291.1 S4 M4LA4**	458	**F904_291.1 P132 BN132MA4**	459
5.4	12170	1.2	268.7	55000	**F904_268.7 S4 M4LA4**	458	**F904_268.7 P132 BN132MA4**	459
6.2	10479	1.3	231.4	55000	**F904_231.4 S4 M4LA4**	458	**F904_231.4 P132 BN132MA4**	459
6.7	9673	1.4	213.6	55000	**F904_213.6 S4 M4LA4**	458	**F904_213.6 P132 BN132MA4**	459
7.4	8986	1.6	194.2	55000	**F903_194.2 S4 M4LA4**	458	**F903_194.2 P132 BN132MA4**	459
7.8	8544	0.9	184.6	45000	**F803_184.6 S4 M4LA4**	455	**F803_184.6 P132 BN132MA4**	456
8.0	8295	1.7	179.2	55000	**F903_179.2 S4 M4LA4**	458	**F903_179.2 P132 BN132MA4**	459
8.8	7536	1.9	162.8	55000	**F903_162.8 S4 M4LA4**	458	**F903_162.8 P132 BN132MA4**	459
9.0	7416	1.1	160.2	45000	**F803_160.2 S4 M4LA4**	455	**F803_160.2 P132 BN132MA4**	456
9.6	6956	2	150.3	55000	**F903_150.3 S4 M4LA4**	458	**F903_150.3 P132 BN132MA4**	459
9.7	6845	1.2	147.9	45000	**F803_147.9 S4 M4LA4**	455	**F803_147.9 P132 BN132MA4**	456
10.5	6356	2.2	137.3	55000	**F903_137.3 S4 M4LA4**	458	**F903_137.3 P132 BN132MA4**	459
10.9	6141	1.3	132.7	45000	**F803_132.7 S4 M4LA4**	455	**F803_132.7 P132 BN132MA4**	456
11.4	5867	2.4	126.8	55000	**F903_126.8 S4 M4LA4**	458	**F903_126.8 P132 BN132MA4**	459
11.8	5669	1.4	122.5	45000	**F803_122.5 S4 M4LA4**	455	**F803_122.5 P132 BN132MA4**	456
12.7	5265	1.5	113.8	45000	**F803_113.8 S4 M4LA4**	455	**F803_113.8 P132 BN132MA4**	456
12.9	5181	2.7	111.9	55000	**F903_111.9 S4 M4LA4**	458	**F903_111.9 P132 BN132MA4**	459
13.1	5073	1.0	109.6	35000	**F703_109.6 S4 M4LA4**	452	**F703_109.6 P132 BN132MA4**	453
13.9	4783	2.9	103.3	55000	**F903_103.3 S4 M4LA4**	458	**F903_103.3 P132 BN132MA4**	459
14.2	4683	1.1	101.2	35000	**F703_101.2 S4 M4LA4**	452	**F703_101.2 P132 BN132MA4**	453
15.0	4432	3.2	95.8	55000	**F903_95.8 S4 M4LA4**	458	**F903_95.8 P132 BN132MA4**	459
15.6	4281	1.2	92.5	35000	**F703_92.5 S4 M4LA4**	452	**F703_92.5 P132 BN132MA4**	453
15.6	4272	1.9	92.3	45000	**F803_92.3 S4 M4LA4**	455	**F803_92.3 P132 BN132MA4**	456
16.3	4091	3.4	88.4	55000	**F903_88.4 S4 M4LA4**	458	**F903_88.4 P132 BN132MA4**	459
16.9	3952	1.3	85.4	35000	**F703_85.4 S4 M4LA4**	452	**F703_85.4 P132 BN132MA4**	453
16.9	3944	2.0	85.2	45000	**F803_85.2 S4 M4LA4**	455	**F803_85.2 P132 BN132MA4**	456
18.9	3529	2.3	76.3	45000	**F803_76.3 S4 M4LA4**	455	**F803_76.3 P132 BN132MA4**	456
19.6	3404	1.5	73.6	35000	**F703_73.6 S4 M4LA4**	452	**F703_73.6 P132 BN132MA4**	453
20.5	3258	2.5	70.4	44700	**F803_70.4 S4 M4LA4**	455	**F803_70.4 P132 BN132MA4**	456
21.1	3160	0.9	68.3	20000	**F603_68.3 S4 M4LA4**	448	**F603_68.3 P132 BN132MA4**	449
21.2	3143	1.6	67.9	35000	**F703_67.9 S4 M4LA4**	452	**F703_67.9 P132 BN132MA4**	453
22.8	2917	1.0	63.0	20000	**F603_63.0 S4 M4LA4**	448	**F603_63.0 P132 BN132MA4**	449
23.0	2893	1.7	62.5	35000	**F703_62.5 S4 M4LA4**	452	**F703_62.5 P132 BN132MA4**	453
23.4	2844	2.8	61.5	43500	**F803_61.5 S4 M4LA4**	455	**F803_61.5 P132 BN132MA4**	456
25.0	2670	1.9	57.7	34900	**F703_57.7 S4 M4LA4**	452	**F703_57.7 P132 BN132MA4**	453
25.4	2626	3.0	56.7	42600	**F803_56.7 S4 M4LA4**	455	**F803_56.7 P132 BN132MA4**	456
27.8	2399	1.2	51.8	20000	**F603_51.8 S4 M4LA4**	448	**F603_51.8 P132 BN132MA4**	449
29.4	2266	2.2	49.0	33800	**F703_49.0 S4 M4LA4**	452	**F703_49.0 P132 BN132MA4**	453
30.0	2214	1.3	47.8	20000	**F603_47.8 S4 M4LA4**	448	**F603_47.8 P132 BN132MA4**	449
32	2092	2.4	45.2	33200	**F703_45.2 S4 M4LA4**	452	**F703_45.2 P132 BN132MA4**	453
34	1948	1.5	42.1	20000	**F603_42.1 S4 M4LA4**	448	**F603_42.1 P132 BN132MA4**	449

7.5 kW

n2 min-1	M2 Nm	S	i	Rn2 N			IEC	
37	1798	1.6	38.8	20000	**F603_38.8 S4 M4LA4**	448	**F603_38.8 P132 BN132MA4**	449
39	1756	1.0	37.1	9090	**F512_37.1 S4 M4LA4**	444	**F512_37.1 P132 BN132MA4**	445
45	1485	2.0	32.1	20000	**F603_32.1 S4 M4LA4**	448	**F603_32.1 P132 BN132MA4**	449
48	1420	1.2	30.0	9010	**F512_30.0 S4 M4LA4**	444	**F512_30.0 P132 BN132MA4**	445
49	1371	2.1	29.6	20000	**F603_29.6 S4 M4LA4**	448	**F603_29.6 P132 BN132MA4**	449
57	1176	1.6	25.4	20000	**F603_25.4 S4 M4LA4**	448	**F603_25.4 P132 BN132MA4**	449
59	1137	3.5	24.6	28800	**F703_24.6 S4 M4LA4**	452	**F703_24.6 P132 BN132MA4**	453
60	1140	1.0	24.1	5500	**F412_24.1 S4 M4LA4**	440	**F412_24.1 P132 BN132MA4**	441
61	1125	1.5	23.8	8810	**F512_23.8 S4 M4LA4**	444	**F512_23.8 P132 BN132MA4**	445
61	1086	1.7	23.5	20000	**F603_23.5 S4 M4LA4**	448	**F603_23.5 P132 BN132MA4**	449
70	956	2.0	20.7	20000	**F603_20.7 S4 M4LA4**	448	**F603_20.7 P132 BN132MA4**	449
76	893	1.2	18.9	5630	**F412_18.9 S4 M4LA4**	440	**F412_18.9 P132 BN132MA4**	441
76	883	2.2	19.1	20000	**F603_19.1 S4 M4LA4**	448	**F603_19.1 P132 BN132MA4**	449
77	890	1.7	18.8	8520	**F512_18.8 S4 M4LA4**	444	**F512_18.8 P132 BN132MA4**	445
84	809	1.3	17.1	5650	**F412_17.1 S4 M4LA4**	440	**F412_17.1 P132 BN132MA4**	441
92	726	2.6	15.7	20000	**F603_15.7 S4 M4LA4**	448	**F603_15.7 P132 BN132MA4**	449
98	692	1.5	14.6	5630	**F412_14.6 S4 M4LA4**	440	**F412_14.6 P132 BN132MA4**	441
99	670	2.8	14.5	20000	**F603_14.5 S4 M4LA4**	448	**F603_14.5 P132 BN132MA4**	449
103	661	2.1	14.0	8080	**F512_14.0 S4 M4LA4**	444	**F512_14.0 P132 BN132MA4**	445
113	589	3.2	12.7	19900	**F603_12.7 S4 M4LA4**	448	**F603_12.7 P132 BN132MA4**	449
123	544	3.5	11.8	19500	**F603_11.8 S4 M4LA4**	448	**F603_11.8 P132 BN132MA4**	449
130	525	2.5	11.1	7700	**F512_11.1 S4 M4LA4**	444	**F512_11.1 P132 BN132MA4**	445
134	509	1.8	10.8	5490	**F412_10.8 S4 M4LA4**	440	**F412_10.8 P132 BN132MA4**	441
158	432	1.6	9.1	5410	**F412_9.1 S4 M4LA4**	440	**F412_9.1 P132 BN132MA4**	441
159	428	2.6	9.1	7290	**F512_9.1 S4 M4LA4**	444	**F512_9.1 P132 BN132MA4**	445
200	340	2.9	7.2	6900	**F512_7.2 S4 M4LA4**	444	**F512_7.2 P132 BN132MA4**	445
214	318	2.0	6.7	5140	**F412_6.7 S4 M4LA4**	440	**F412_6.7 P132 BN132MA4**	441
269	253	2.9	10.8	4880	**F412_10.8 S4 M4SB2**	440	**F412_10.8 P132 BN132SB2**	441
317	214	2.8	9.1	4730	**F412_9.1 S4 M4SB2**	440	**F412_9.1 P132 BN132SB2**	441
431	158	3.3	6.7	4390	**F412_6.7 S4 M4SB2**	440	**F412_6.7 P132 BN132SB2**	441

9.2 kW

n2 min-1	M2 Nm	S	i	Rn2 N			IEC	
4.9	16172	0.9	291.1	55000	**F904_291.1 S4 M4LB4**	458	**F904_291.1 P132 BN132MB4**	459
5.4	14928	0.9	268.7	55000	**F904_268.7 S4 M4LB4**	458	**F904_268.7 P132 BN132MB4**	459
6.2	12854	1.1	231.4	55000	**F904_231.4 S4 M4LB4**	458	**F904_231.4 P132 BN132MB4**	459
6.7	11865	1.2	213.6	55000	**F904_213.6 S4 M4LB4**	458	**F904_213.6 P132 BN132MB4**	459
7.4	11023	1.3	194.2	55000	**F903_194.2 S4 M4LB4**	458	**F903_194.2 P132 BN132MB4**	459
8.0	10175	1.4	179.2	55000	**F903_179.2 S4 M4LB4**	458	**F903_179.2 P132 BN132MB4**	459
8.8	9244	1.5	162.8	55000	**F903_162.8 S4 M4LB4**	458	**F903_162.8 P132 BN132MB4**	459
9.6	8533	1.6	150.3	55000	**F903_150.3 S4 M4LB4**	458	**F903_150.3 P132 BN132MB4**	459
9.7	8397	1.0	147.9	45000	**F803_147.9 S4 M4LB4**	455	**F803_147.9 P132 BN132MB4**	456
10.5	7797	1.8	137.3	55000	**F903_137.3 S4 M4LB4**	458	**F903_137.3 P132 BN132MB4**	459
10.9	7533	1.1	132.7	45000	**F803_132.7 S4 M4LB4**	455	**F803_132.7 P132 BN132MB4**	456
11.4	7197	1.9	126.8	55000	**F903_126.8 S4 M4LB4**	458	**F903_126.8 P132 BN132MB4**	459
11.8	6954	1.2	122.5	45000	**F803_122.5 S4 M4LB4**	455	**F803_122.5 P132 BN132MB4**	456
12.7	6458	1.2	113.8	45000	**F803_113.8 S4 M4LB4**	455	**F803_113.8 P132 BN132MB4**	456

9.2 kW

n₂ min-1	**M₂** Nm	**S**	**i**	**Rn2** N	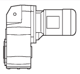		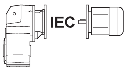	
12.9	6355	2.2	111.9	55000	**F903_111.9 S4 M4LB4**	458	**F903_111.9 P132 BN132MB4**	459
13.9	5867	2.4	103.3	55000	**F903_103.3 S4 M4LB4**	458	**F903_103.3 P132 BN132MB4**	459
15.0	5437	2.6	95.8	55000	**F903_95.8 S4 M4LB4**	458	**F903_95.8 P132 BN132MB4**	459
15.6	5251	1.0	92.5	35000	**F703_92.5 S4 M4LB4**	452	**F703_92.5 P132 BN132MB4**	453
15.6	5241	1.5	92.3	45000	**F803_92.3 S4 M4LB4**	455	**F803_92.3 P132 BN132MB4**	456
16.3	5018	2.8	88.4	55000	**F903_88.4 S4 M4LB4**	458	**F903_88.4 P132 BN132MB4**	459
16.9	4848	1.0	85.4	35000	**F703_85.4 S4 M4LB4**	452	**F703_85.4 P132 BN132MB4**	453
16.9	4837	1.7	85.2	45000	**F803_85.2 S4 M4LB4**	455	**F803_85.2 P132 BN132MB4**	456
18.8	4352	3.2	76.7	55000	**F903_76.7 S4 M4LB4**	458	**F903_76.7 P132 BN132MB4**	459
18.9	4329	1.8	76.3	44100	**F803_76.3 S4 M4LB4**	455	**F803_76.3 P132 BN132MB4**	456
19.6	4176	1.2	73.6	35000	**F703_73.6 S4 M4LB4**	452	**F703_73.6 P132 BN132MB4**	453
20.4	4017	3.5	70.8	55000	**F903_70.8 S4 M4LB4**	458	**F903_70.8 P132 BN132MB4**	459
20.5	3996	2.0	70.4	43700	**F803_70.4 S4 M4LB4**	455	**F803_70.4 P132 BN132MB4**	456
21.2	3855	1.3	67.9	34600	**F703_67.9 S4 M4LB4**	452	**F703_67.9 P132 BN132MB4**	453
23.0	3548	1.4	62.5	34200	**F703_62.5 S4 M4LB4**	452	**F703_62.5 P132 BN132MB4**	453
23.4	3489	2.3	61.5	42200	**F803_61.5 S4 M4LB4**	455	**F803_61.5 P132 BN132MB4**	456
25.0	3275	1.5	57.7	33700	**F703_57.7 S4 M4LB4**	452	**F703_57.7 P132 BN132MB4**	453
25.4	3221	2.5	56.7	41400	**F803_56.7 S4 M4LB4**	455	**F803_56.7 P132 BN132MB4**	456
27.8	2942	1.0	51.8	20000	**F603_51.8 S4 M4LB4**	448	**F603_51.8 P132 BN132MB4**	449
29.4	2779	1.8	49.0	32800	**F703_49.0 S4 M4LB4**	452	**F703_49.0 P132 BN132MB4**	453
30.0	2716	1.1	47.8	20000	**F603_47.8 S4 M4LB4**	448	**F603_47.8 P132 BN132MB4**	449
32	2566	1.9	45.2	32300	**F703_45.2 S4 M4LB4**	452	**F703_45.2 P132 BN132MB4**	453
34	2389	1.2	42.1	20000	**F603_42.1 S4 M4LB4**	448	**F603_42.1 P132 BN132MB4**	449
37	2205	1.3	38.8	20000	**F603_38.8 S4 M4LB4**	448	**F603_38.8 P132 BN132MB4**	449
45	1821	1.6	32.1	20000	**F603_32.1 S4 M4LB4**	448	**F603_32.1 P132 BN132MB4**	449
48	1742	1.0	30.0	8210	**F512_30.0 S4 M4LB4**	444	**F512_30.0 P132 BN132MB4**	445
49	1681	1.7	29.6	20000	**F603_29.6 S4 M4LB4**	448	**F603_29.6 P132 BN132MB4**	449
57	1443	1.3	25.4	20000	**F603_25.4 S4 M4LB4**	448	**F603_25.4 P132 BN132MB4**	449
59	1394	2.9	24.6	28300	**F703_24.6 S4 M4LB4**	452	**F703_24.6 P132 BN132MB4**	453
61	1380	1.2	23.8	8170	**F512_23.8 S4 M4LB4**	444	**F512_23.8 P132 BN132MB4**	445
61	1332	1.4	23.5	20000	**F603_23.5 S4 M4LB4**	448	**F603_23.5 P132 BN132MB4**	449
64	1283	3.4	22.6	27800	**F703_22.6 S4 M4LB4**	452	**F703_22.6 P132 BN132MB4**	453
69	1185	3.4	20.9	27200	**F703_20.9 S4 M4LB4**	452	**F703_20.9 P132 BN132MB4**	453
70	1173	1.6	20.7	20000	**F603_20.7 S4 M4LB4**	448	**F603_20.7 P132 BN132MB4**	449
76	1096	1.0	18.9	4920	**F412_18.9 S4 M4LB4**	440	**F412_18.9 P132 BN132MB4**	441
76	1083	1.8	19.1	20000	**F603_19.1 S4 M4LB4**	448	**F603_19.1 P132 BN132MB4**	449
77	1092	1.4	18.8	8020	**F512_18.8 S4 M4LB4**	444	**F512_18.8 P132 BN132MB4**	445
84	993	1.1	17.1	5000	**F412_17.1 S4 M4LB4**	440	**F412_17.1 P132 BN132MB4**	441
92	890	2.1	15.7	20000	**F603_15.7 S4 M4LB4**	448	**F603_15.7 P132 BN132MB4**	449
98	848	1.2	14.6	5070	**F412_14.6 S4 M4LB4**	440	**F412_14.6 P132 BN132MB4**	441
99	822	2.3	14.5	20000	**F603_14.5 S4 M4LB4**	448	**F603_14.5 P132 BN132MB4**	449
103	811	1.8	14.0	7700	**F512_14.0 S4 M4LB4**	444	**F512_14.0 P132 BN132MB4**	445
113	723	2.6	12.7	19700	**F603_12.7 S4 M4LB4**	448	**F603_12.7 P132 BN132MB4**	449
123	667	2.8	11.8	19300	**F603_11.8 S4 M4LB4**	448	**F603_11.8 P132 BN132MB4**	449
130	644	2.1	11.1	7400	**F512_11.1 S4 M4LB4**	444	**F512_11.1 P132 BN132MB4**	445
134	625	1.4	10.8	5080	**F412_10.8 S4 M4LB4**	440	**F412_10.8 P132 BN132MB4**	441
148	551	3.4	9.7	18400	**F603_9.7 S4 M4LB4**	448	**F603_9.7 P132 BN132MB4**	449
158	530	1.3	9.1	5080	**F412_9.1 S4 M4LB4**	440	**F412_9.1 P132 BN132MB4**	441
159	525	2.1	9.1	7040	**F512_9.1 S4 M4LB4**	444	**F512_9.1 P132 BN132MB4**	445
200	417	2.3	7.2	6700	**F512_7.2 S4 M4LB4**	444	**F512_7.2 P132 BN132MB4**	445
214	390	1.6	6.7	4890	**F412_6.7 S4 M4LB4**	440	**F412_6.7 P132 BN132MB4**	441

9.2 kW

n2 min-1	M2 Nm	S	i	Rn2 N			IEC	
264	317	3.4	11.1	6340	**F512_11.1 S4 M4LA2**	444	**F512_11.1 P132 BN132M2**	445
272	307	2.4	10.8	4680	**F412_10.8 S4 M4LA2**	440	**F412_10.8 P132 BN132M2**	441
321	260	2.3	9.1	4560	**F412_9.1 S4 M4LA2**	440	**F412_9.1 P132 BN132M2**	441
324	258	3.5	9.1	5980	**F512_9.1 S4 M4LA2**	444	**F512_9.1 P132 BN132M2**	445
436	192	2.7	6.7	4270	**F412_6.7 S4 M4LA2**	440	**F412_6.7 P132 BN132M2**	441

11 kW

n2 min-1	M2 Nm	S	i	Rn2 N			IEC	
6.2	15369	0.9	231.4	55000	**F904_231.4 S4 M4LC4**	458	**F904_231.4 P160 BN160MR4**	459
6.7	14187	1.0	213.6	55000	**F904_213.6 S4 M4LC4**	458	**F904_213.6 P160 BN160MR4**	459
7.4	13179	1.1	194.2	55000	**F903_194.2 S4 M4LC4**	458	**F903_194.2 P160 BN160MR4**	459
8.0	12165	1.2	179.2	55000	**F903_179.2 S4 M4LC4**	458	**F903_179.2 P160 BN160MR4**	459
8.8	11053	1.3	162.8	55000	**F903_162.8 S4 M4LC4**	458	**F903_162.8 P160 BN160MR4**	459
9.6	10203	1.4	150.3	55000	**F903_150.3 S4 M4LC4**	458	**F903_150.3 P160 BN160MR4**	459
10.5	9323	1.5	137.3	55000	**F903_137.3 S4 M4LC4**	458	**F903_137.3 P160 BN160MR4**	459
11.4	8606	1.6	126.8	55000	**F903_126.8 S4 M4LC4**	458	**F903_126.8 P160 BN160MR4**	459
11.8	8314	1.0	122.5	45000	**F803_122.5 S4 M4LC4**	455	**F803_122.5 P160 BN160MR4**	456
12.7	7721	1.0	113.8	45000	**F803_113.8 S4 M4LC4**	455	**F803_113.8 P160 BN160MR4**	456
12.9	7599	1.8	111.9	55000	**F903_111.9 S4 M4LC4**	458	**F903_111.9 P160 BN160MR4**	459
13.9	7014	2.0	103.3	55000	**F903_103.3 S4 M4LC4**	458	**F903_103.3 P160 BN160MR4**	459
15.0	6500	2.2	95.8	55000	**F903_95.8 S4 M4LC4**	458	**F903_95.8 P160 BN160MR4**	459
15.6	6266	1.3	92.3	44100	**F803_92.3 S4 M4LC4**	455	**F803_92.3 P160 BN160MR4**	456
16.3	6000	2.3	88.4	55000	**F903_88.4 S4 M4LC4**	458	**F903_88.4 P160 BN160MR4**	459
16.9	5784	1.4	85.2	44000	**F803_85.2 S4 M4LC4**	455	**F803_85.2 P160 BN160MR4**	456
18.8	5203	2.7	76.7	55000	**F903_76.7 S4 M4LC4**	458	**F903_76.7 P160 BN160MR4**	459
18.9	5176	1.5	76.3	42800	**F803_76.3 S4 M4LC4**	455	**F803_76.3 P160 BN160MR4**	456
19.6	4993	1.0	73.6	33500	**F703_73.6 S4 M4LC4**	452	**F703_73.6 P160 BN160MR4**	453
20.4	4803	2.9	70.8	55000	**F903_70.8 S4 M4LC4**	458	**F903_70.8 P160 BN160MR4**	459
20.5	4778	1.7	70.4	42500	**F803_70.4 S4 M4LC4**	455	**F803_70.4 P160 BN160MR4**	456
21.2	4609	1.1	67.9	33100	**F703_67.9 S4 M4LC4**	452	**F703_67.9 P160 BN160MR4**	453
23.0	4243	1.2	62.5	32900	**F703_62.5 S4 M4LC4**	452	**F703_62.5 P160 BN160MR4**	453
23.2	4215	3.3	62.1	55000			**F903_62.1 P160 BN160MR4**	459
23.4	4172	1.9	61.5	41100	**F803_61.5 S4 M4LC4**	455	**F803_61.5 P160 BN160MR4**	456
25.0	3916	1.3	57.7	32500	**F703_57.7 S4 M4LC4**	452	**F703_57.7 P160 BN160MR4**	453
25.4	3851	2.1	56.7	40800	**F803_56.7 S4 M4LC4**	455	**F803_56.7 P160 BN160MR4**	456
29.3	3333	2.4	49.1	39300			**F803_49.1 P160 BN160MR4**	456
29.4	3323	1.5	49.0	31800	**F703_49.0 S4 M4LC4**	452	**F703_49.0 P160 BN160MR4**	453
32	3068	1.6	45.2	31300	**F703_45.2 S4 M4LC4**	452	**F703_45.2 P160 BN160MR4**	453
32	3077	2.6	45.3	38900			**F803_45.3 P160 BN160MR4**	456
34	2857	1.0	42.1	20000	**F603_42.1 S4 M4LC4**	448	**F603_42.1 P160 BN160MR4**	449
37	2637	1.1	38.8	20000	**F603_38.8 S4 M4LC4**	448	**F603_38.8 P160 BN160MR4**	449
38	2606	1.9	38.4	30500			**F703_38.4 P160 BN160MR4**	453
41	2406	2.1	35.4	30000			**F703_35.4 P160 BN160MR4**	453
45	2178	1.3	32.1	20000	**F603_32.1 S4 M4LC4**	448	**F603_32.1 P160 BN160MR4**	449
49	2010	1.4	29.6	20000	**F603_29.6 S4 M4LC4**	448	**F603_29.6 P160 BN160MR4**	449
52	1880	2.5	27.7	28500			**F703_27.7 P160 BN160MR4**	453
57	1725	1.1	25.4	20000	**F603_25.4 S4 M4LC4**	448	**F603_25.4 P160 BN160MR4**	449

11 kW

n2 min-1	M2 Nm	S	i	Rn2 N			IEC	
59	1667	2.4	24.6	27800	**F703_24.6 S4 M4LC4**	452	**F703_24.6 P160 BN160MR4**	453
61	1650	1.0	23.8	7500	**F512_23.8 S4 M4LC4**	444	**F512_23.8 P160 BN160MR4**	445
61	1593	1.2	23.5	20000	**F603_23.5 S4 M4LC4**	448	**F603_23.5 P160 BN160MR4**	449
64	1534	2.8	22.6	27300	**F703_22.6 S4 M4LC4**	452	**F703_22.6 P160 BN160MR4**	453
69	1416	2.8	20.9	26800	**F703_20.9 S4 M4LC4**	452	**F703_20.9 P160 BN160MR4**	453
70	1402	1.4	20.7	20000	**F603_20.7 S4 M4LC4**	448	**F603_20.7 P160 BN160MR4**	449
76	1294	1.5	19.1	20000	**F603_19.1 S4 M4LC4**	448	**F603_19.1 P160 BN160MR4**	449
77	1305	1.2	18.8	7490	**F512_18.8 S4 M4LC4**	444	**F512_18.8 P160 BN160MR4**	445
92	1064	1.8	15.7	20000	**F603_15.7 S4 M4LC4**	448	**F603_15.7 P160 BN160MR4**	449
98	1014	1.0	14.6	4490	**F412_14.6 S4 M4LC4**	440		
99	982	1.9	14.5	20000	**F603_14.5 S4 M4LC4**	448	**F603_14.5 P160 BN160MR4**	449
103	969	1.5	14.0	7310	**F512_14.0 S4 M4LC4**	444	**F512_14.0 P160 BN160MR4**	445
113	864	2.2	12.7	19400	**F603_12.7 S4 M4LC4**	448	**F603_12.7 P160 BN160MR4**	449
123	798	2.4	11.8	19000	**F603_11.8 S4 M4LC4**	448	**F603_11.8 P160 BN160MR4**	449
130	770	1.7	11.1	7090	**F512_11.1 S4 M4LC4**	444	**F512_11.1 P160 BN160MR4**	445
134	747	1.2	10.8	4650	**F412_10.8 S4 M4LC4**	440		
148	659	2.9	9.7	18200	**F603_9.7 S4 M4LC4**	448	**F603_9.7 P160 BN160MR4**	449
158	633	1.1	9.1	4720	**F412_9.1 S4 M4LC4**	440		
159	628	1.8	9.1	6770	**F512_9.1 S4 M4LC4**	444	**F512_9.1 P160 BN160MR4**	445
161	608	3.1	9.0	17800	**F603_9.0 S4 M4LC4**	448	**F603_9.0 P160 BN160MR4**	449
200	499	2.0	7.2	6490	**F512_7.2 S4 M4LC4**	444	**F512_7.2 P160 BN160MR4**	445
214	466	1.4	6.7	4630	**F412_6.7 S4 M4LC4**	440		
263	380	2.8	11.1	6170	**F512_11.1 S4 M4LC2**	444	**F512_11.1 P160 BN160MR2**	445
271	368	2.0	10.8	4460	**F412_10.8 S4 M4LC2**	440		
320	312	2.0	9.1	4380	**F412_9.1 S4 M4LC2**	440		
323	310	2.9	9.1	5840	**F512_9.1 S4 M4LC2**	444	**F512_9.1 P160 BN160MR2**	445
406	246	3.2	7.2	5510	**F512_7.2 S4 M4LC2**	444	**F512_7.2 P160 BN160MR2**	445
434	230	2.3	6.7	4130	**F412_6.7 S4 M4LC2**	440		

15 kW

n2 min-1	M2 Nm	S	i	Rn2 N			IEC	
8.1	16362	0.9	179.2	55000	**F903_179.2 S5 M5SB4**	458	**F903_179.2 P160 BN160L4**	459
9.0	14866	0.9	162.8	55000	**F903_162.8 S5 M5SB4**	458	**F903_162.8 P160 BN160L4**	459
9.7	13722	1.0	150.3	55000	**F903_150.3 S5 M5SB4**	458	**F903_150.3 P160 BN160L4**	459
10.6	12539	1.1	137.3	55000	**F903_137.3 S5 M5SB4**	458	**F903_137.3 P160 BN160L4**	459
11.5	11574	1.2	126.8	55000	**F903_126.8 S5 M5SB4**	458	**F903_126.8 P160 BN160L4**	459
13.0	10220	1.4	111.9	55000	**F903_111.9 S5 M5SB4**	458	**F903_111.9 P160 BN160L4**	459
14.1	9434	1.5	103.3	55000	**F903_103.3 S5 M5SB4**	458	**F903_103.3 P160 BN160L4**	459
15.2	8743	1.6	95.8	55000	**F903_95.8 S5 M5SB4**	458	**F903_95.8 P160 BN160L4**	459
15.8	8427	0.9	92.3	41300	**F803_92.3 S5 M5SB4**	455	**F803_92.3 P160 BN160L4**	456
16.5	8070	1.7	88.4	55000	**F903_88.4 S5 M5SB4**	458	**F903_88.4 P160 BN160L4**	459
17.1	7779	1.0	85.2	40800	**F803_85.2 S5 M5SB4**	455	**F803_85.2 P160 BN160L4**	456
19.0	6998	2.0	76.7	55000	**F903_76.7 S5 M5SB4**	458	**F903_76.7 P160 BN160L4**	459
19.1	6961	1.1	76.3	40500	**F803_76.3 S5 M5SB4**	455	**F803_76.3 P160 BN160L4**	456
20.6	6460	2.2	70.8	55000	**F903_70.8 S5 M5SB4**	458	**F903_70.8 P160 BN160L4**	459
20.7	6426	1.2	70.4	39900	**F803_70.4 S5 M5SB4**	455	**F803_70.4 P160 BN160L4**	456
23.5	5669	2.5	62.1	55000			**F903_62.1 P160 BN160L4**	459

15 kW

n_2 min^{-1}	M_2 Nm	S	i	R_{n2} N			IEC	
23.8	5611	1.4	61.5	38700	**F803_61.5 S5 M5SB4**	455	**F803_61.5 P160 BN160L4**	456
25.3	5267	0.9	57.7	29700	**F703_57.7 S5 M5SB4**	452	**F703_57.7 P160 BN160L4**	453
25.5	5233	2.7	57.3	55000			**F903_57.3 P160 BN160L4**	459
25.7	5179	1.5	56.7	38600	**F803_56.7 S5 M5SB4**	455	**F803_56.7 P160 BN160L4**	456
29.7	4483	1.8	49.1	37800			**F803_49.1 P160 BN160L4**	456
29.8	4470	1.1	49.0	29400	**F703_49.0 S5 M5SB4**	452	**F703_49.0 P160 BN160L4**	453
32	4126	1.2	45.2	29100	**F703_45.2 S5 M5SB4**	452	**F703_45.2 P160 BN160L4**	453
32	4138	1.9	45.3	37200			**F803_45.3 P160 BN160L4**	456
38	3505	1.4	38.4	28600			**F703_38.4 P160 BN160L4**	453
41	3235	1.5	35.4	28200			**F703_35.4 P160 BN160L4**	453
46	2929	1.0	32.1	20000	**F603_32.1 S5 M5SB4**	448	**F603_32.1 P160 BN160L4**	449
49	2704	1.1	29.6	20000	**F603_29.6 S5 M5SB4**	448	**F603_29.6 P160 BN160L4**	449
53	2528	1.8	27.7	27100			**F703_27.7 P160 BN160L4**	453
58	2303	2.7	25.2	32900	**F803_25.2 S5 M5SB4**	455	**F803_25.2 P160 BN160L4**	456
59	2242	1.8	24.6	26500	**F703_24.6 S5 M5SB4**	452	**F703_24.6 P160 BN160L4**	453
65	2064	2.1	22.6	26200	**F703_22.6 S5 M5SB4**	452	**F703_22.6 P160 BN160L4**	453
66	2011	3.4	22.0	31900	**F803_22.0 S5 M5SB4**	455	**F803_22.0 P160 BN160L4**	456
70	1905	2.1	20.9	25700	**F703_20.9 S5 M5SB4**	452	**F703_20.9 P160 BN160L4**	453
71	1886	1.0	20.7	20000	**F603_20.7 S5 M5SB4**	448	**F603_20.7 P160 BN160L4**	449
72	1856	3.4	20.3	31300	**F803_20.3 S5 M5SB4**	455	**F803_20.3 P160 BN160L4**	456
77	1741	1.1	19.1	20000	**F603_19.1 S5 M5SB4**	448	**F603_19.1 P160 BN160L4**	449
82	1617	2.7	17.7	24900	**F703_17.7 S5 M5SB4**	452	**F703_17.7 P160 BN160L4**	453
89	1492	2.7	16.3	24400	**F703_16.3 S5 M5SB4**	452	**F703_16.3 P160 BN160L4**	453
93	1432	1.3	15.7	19600	**F603_15.7 S5 M5SB4**	448	**F603_15.7 P160 BN160L4**	449
101	1321	1.4	14.5	19200	**F603_14.5 S5 M5SB4**	448	**F603_14.5 P160 BN160L4**	449
105	1268	3.1	13.9	23600	**F703_13.9 S5 M5SB4**	452	**F703_13.9 P160 BN160L4**	453
114	1170	3.1	12.8	23100	**F703_12.8 S5 M5SB4**	452	**F703_12.8 P160 BN160L4**	453
115	1162	1.6	12.7	18800	**F603_12.7 S5 M5SB4**	448	**F603_12.7 P160 BN160L4**	449
124	1073	1.8	11.8	18400	**F603_11.8 S5 M5SB4**	448	**F603_11.8 P160 BN160L4**	449
135	991	3.5	10.9	22300	**F703_10.9 S5 M5SB4**	452	**F703_10.9 P160 BN160L4**	453
146	914	3.5	10.0	21800	**F703_10.0 S5 M5SB4**	452	**F703_10.0 P160 BN160L4**	453
150	886	2.1	9.7	17700	**F603_9.7 S5 M5SB4**	448	**F603_9.7 P160 BN160L4**	449
163	818	2.3	9.0	17300	**F603_9.0 S5 M5SB4**	448	**F603_9.0 P160 BN160L4**	449

18.5 kW

n_2 min^{-1}	M_2 Nm	S	i	R_{n2} N			IEC	
10.6	15456	0.9	137.3	55000	**F903_137.3 S5 M5LA4**	458	**F903_137.3 P180 BN180M4**	459
11.5	14267	1.0	126.8	55000	**F903_126.8 S5 M5LA4**	458	**F903_126.8 P180 BN180M4**	459
13.0	12598	1.1	111.9	55000	**F903_111.9 S5 M5LA4**	458	**F903_111.9 P180 BN180M4**	459
14.1	11629	1.2	103.3	55000	**F903_103.3 S5 M5LA4**	458	**F903_103.3 P180 BN180M4**	459
15.2	10777	1.3	95.8	55000	**F903_95.8 S5 M5LA4**	458	**F903_95.8 P180 BN180M4**	459
16.5	9948	1.4	88.4	55000	**F903_88.4 S5 M5LA4**	458	**F903_88.4 P180 BN180M4**	459
19.0	8626	1.6	76.7	55000	**F903_76.7 S5 M5LA4**	458	**F903_76.7 P180 BN180M4**	459
19.1	8581	0.9	76.3	38100	**F803_76.3 S5 M5LA4**	455	**F803_76.3 P180 BN180M4**	456
20.6	7963	1.8	70.8	55000	**F903_70.8 S5 M5LA4**	458	**F903_70.8 P180 BN180M4**	459
20.7	7921	1.0	70.4	37600	**F803_70.4 S5 M5LA4**	455	**F803_70.4 P180 BN180M4**	456
23.5	6989	2.0	62.1	55000			**F903_62.1 P180 BN180M4**	459

18.5 kW

n2 min-1	M2 Nm	S	i	Rn2 N			IEC	
23.8	6916	1.1	61.5	37400	**F803_61.5 S5 M5LA4**	455	**F803_61.5 P180 BN180M4**	456
25.5	6451	2.2	57.3	55000			**F903_57.3 P180 BN180M4**	459
25.7	6384	1.3	56.7	36800	**F803_56.7 S5 M5LA4**	455	**F803_56.7 P180 BN180M4**	456
29.3	5615	2.5	49.9	55000			**F903_49.9 P180 BN180M4**	459
29.7	5526	1.4	49.1	35800			**F803_49.1 P180 BN180M4**	456
29.8	5510	0.9	49.0	27400	**F703_49.0 S5 M5LA4**	452	**F703_49.0 P180 BN180M4**	453
32	5183	2.7	46.1	55000			**F903_46.1 P180 BN180M4**	459
32	5101	1.6	45.3	35700			**F803_45.3 P180 BN180M4**	456
32	5086	1.0	45.2	27200	**F703_45.2 S5 M5LA4**	452	**F703_45.2 P180 BN180M4**	453
36	4558	3.1	40.5	53700			**F903_40.5 P180 BN180M4**	459
37	4389	1.8	39.0	35000			**F803_39.0 P180 BN180M4**	456
38	4321	1.2	38.4	27000			**F703_38.4 P180 BN180M4**	453
39	4207	3.2	37.4	52700			**F903_37.4 P180 BN180M4**	459
41	4051	2.0	36.0	34400			**F803_36.0 P180 BN180M4**	456
41	3988	1.3	35.4	26700			**F703_35.4 P180 BN180M4**	453
47	3517	2.3	31.3	33600			**F803_31.3 P180 BN180M4**	456
49	3376	1.5	30.0	26300			**F703_30.0 P180 BN180M4**	453
51	3246	2.5	28.8	33000			**F803_28.8 P180 BN180M4**	456
53	3116	1.5	27.7	26000			**F703_27.7 P180 BN180M4**	453
58	2839	2.2	25.2	32100	**F803_25.2 S5 M5LA4**	455	**F803_25.2 P180 BN180M4**	456
59	2764	1.4	24.6	25500	**F703_24.6 S5 M5LA4**	452	**F703_24.6 P180 BN180M4**	453
65	2544	1.7	22.6	25200	**F703_22.6 S5 M5LA4**	452	**F703_22.6 P180 BN180M4**	453
66	2479	2.7	22.0	31300	**F803_22.0 S5 M5LA4**	455	**F803_22.0 P180 BN180M4**	456
70	2348	1.7	20.9	24900	**F703_20.9 S5 M5LA4**	452	**F703_20.9 P180 BN180M4**	453
72	2288	2.7	20.3	30600	**F803_20.3 S5 M5LA4**	455	**F803_20.3 P180 BN180M4**	456
82	1993	2.2	17.7	24200	**F703_17.7 S5 M5LA4**	452	**F703_17.7 P180 BN180M4**	453
83	1981	3.4	17.6	29700	**F803_17.6 S5 M5LA4**	455	**F803_17.6 P180 BN180M4**	456
89	1839	2.2	16.3	23800	**F703_16.3 S5 M5LA4**	452	**F703_16.3 P180 BN180M4**	453
90	1828	3.4	16.2	29100	**F803_16.2 S5 M5LA4**	455	**F803_16.2 P180 BN180M4**	456
93	1765	1.1	15.7	18700	**F603_15.7 S5 M5LA4**	448	**F603_15.7 P180 BN180M4**	449
101	1629	1.2	14.5	18600	**F603_14.5 S5 M5LA4**	448	**F603_14.5 P180 BN180M4**	449
105	1563	2.5	13.9	23000	**F703_13.9 S5 M5LA4**	452	**F703_13.9 P180 BN180M4**	453
114	1442	2.5	12.8	22600	**F703_12.8 S5 M5LA4**	452	**F703_12.8 P180 BN180M4**	453
115	1433	1.3	12.7	18300	**F603_12.7 S5 M5LA4**	448	**F603_12.7 P180 BN180M4**	449
124	1323	1.4	11.8	17900	**F603_11.8 S5 M5LA4**	448	**F603_11.8 P180 BN180M4**	449
135	1221	2.8	10.9	21800	**F703_10.9 S5 M5LA4**	452	**F703_10.9 P180 BN180M4**	453
146	1127	2.8	10.0	21400	**F703_10.0 S5 M5LA4**	452	**F703_10.0 P180 BN180M4**	453
150	1092	1.7	9.7	17300	**F603_9.7 S5 M5LA4**	448	**F603_9.7 P180 BN180M4**	449
163	1008	1.9	9.0	16900	**F603_9.0 S5 M5LA4**	448	**F603_9.0 P180 BN180M4**	449

22 kW

n2 min-1	M2 Nm	S	i	Rn2 N			IEC	
13.1	14880	0.9	111.9	55000			**F903_111.9 P180 BN180L4**	459
14.2	13735	1.0	103.3	55000			**F903_103.3 P180 BN180L4**	459
15.4	12728	1.1	95.8	55000			**F903_95.8 P180 BN180L4**	459
16.6	11749	1.2	88.4	55000			**F903_88.4 P180 BN180L4**	459
19.2	10188	1.4	76.7	55000			**F903_76.7 P180 BN180L4**	459

22 kW

n2 min-1	M2 Nm	S	i	Rn2 N			IEC	
20.8	9405	1.5	70.8	55000			**F903_70.8 P180 BN180L4**	459
23.7	8254	1.7	62.1	55000			**F903_62.1 P180 BN180L4**	459
23.9	8169	1.0	61.5	35400			**F803_61.5 P180 BN180L4**	456
25.6	7619	1.8	57.3	55000			**F903_57.3 P180 BN180L4**	459
25.9	7541	1.1	56.7	35000			**F803_56.7 P180 BN180L4**	456
29.5	6632	2.1	49.9	54400			**F903_49.9 P180 BN180L4**	459
29.9	6527	1.2	49.1	34100			**F803_49.1 P180 BN180L4**	456
32	6122	2.3	46.1	53500			**F903_46.1 P180 BN180L4**	459
32	6025	1.3	45.3	34300			**F803_45.3 P180 BN180L4**	456
36	5383	2.6	40.5	52300			**F903_40.5 P180 BN180L4**	459
38	5184	1.5	39.0	33300			**F803_39.0 P180 BN180L4**	456
38	5103	1	38.4	25400			**F703_38.4 P180 BN180L4**	453
39	4969	2.7	37.4	51400			**F903_37.4 P180 BN180L4**	459
41	4785	1.7	36.0	33200			**F803_36.0 P180 BN180L4**	456
41	4711	1.1	35.4	25300			**F703_35.4 P180 BN180L4**	453
47	4154	1.9	31.3	32600			**F803_31.3 P180 BN180L4**	456
47	4120	3.2	31.0	49500			**F903_31.0 P180 BN180L4**	459
49	3988	1.3	30.0	25100			**F703_30.0 P180 BN180L4**	453
51	3834	2.1	28.8	32000			**F803_28.8 P180 BN180L4**	456
51	3803	3.2	28.6	48600			**F903_28.6 P180 BN180L4**	459
53	3681	1.3	27.7	24800			**F703_27.7 P180 BN180L4**	453
58	3353	1.9	25.2	31300			**F803_25.2 P180 BN180L4**	456
60	3264	1.2	24.6	24500			**F703_24.6 P180 BN180L4**	453
65	3005	1.4	22.6	24300			**F703_22.6 P180 BN180L4**	453
67	2928	2.3	22	30200			**F803_22.0 P180 BN180L4**	456
70	2773	1.4	20.9	24000			**F703_20.9 P180 BN180L4**	453
72	2703	2.3	20.3	29900			**F803_20.3 P180 BN180L4**	456
83	2354	1.8	17.7	23400			**F703_17.7 P180 BN180L4**	453
84	2339	2.9	17.6	29100			**F803_17.6 P180 BN180L4**	456
90	2173	1.8	16.3	23100			**F703_16.3 P180 BN180L4**	453
90	2159	2.9	16.2	28500			**F803_16.2 P180 BN180L4**	456
106	1846	2.1	13.9	22400			**F703_13.9 P180 BN180L4**	453
115	1704	2.1	12.8	22100			**F703_12.8 P180 BN180L4**	453
115	1692	1.1	12.7	17700			**F603_12.7 P180 BN180L4**	449
125	1562	1.2	11.8	17400			**F603_11.8 P180 BN180L4**	449
135	1442	2.4	10.9	21400			**F703_10.9 P180 BN180L4**	453
147	1331	2.4	10.0	21000			**F703_10.0 P180 BN180L4**	453
151	1290	1.5	9.7	16900			**F603_9.7 P180 BN180L4**	449
164	1191	1.6	9.0	16500			**F603_9.0 P180 BN180L4**	449

30 kW

n2 min-1	M2 Nm	S	i	Rn2 N			IEC	
16.6	16022	0.9	88.4	52200			**F903_88.4 P200 BN200L4**	459
19.2	13893	1.0	76.7	52400			**F903_76.7 P200 BN200L4**	459
20.8	12825	1.1	70.8	52100			**F903_70.8 P200 BN200L4**	459
23.7	11256	1.2	62.1	51800			**F903_62.1 P200 BN200L4**	459

30 kW

n_2 min-1	M_2 Nm	S	i	R_{n2} N			IEC	
25.6	10390	1.3	57.3	51400			**F903_57.3 P200 BN200L4**	459
29.5	9044	1.5	49.9	50800			**F903_49.9 P200 BN200L4**	459
32	8348	1.7	46.1	50200			**F903_46.1 P200 BN200L4**	459
32	8216	1.0	45.3	30900			**F803_45.3 P200 BN200L4**	456
36	7341	1.9	40.5	49400			**F903_40.5 P200 BN200L4**	459
38	7069	1.1	39.0	31000			**F803_39.0 P200 BN200L4**	456
39	6776	2.0	37.4	48700			**F903_37.4 P200 BN200L4**	459
41	6525	1.2	36.0	30600			**F803_36.0 P200 BN200L4**	456
47	5664	1.4	31.3	29900			**F803_31.3 P200 BN200L4**	456
47	5618	2.3	31.0	47300			**F903_31.0 P200 BN200L4**	459
49	5438	0.9	30.0	22300			**F703_30.0 P200 BN200L4**	453
51	5229	1.5	28.8	29500			**F803_28.8 P200 BN200L4**	456
51	5186	2.3	28.6	46600			**F903_28.6 P200 BN200L4**	459
53	5019	0.9	27.7	22200			**F703_27.7 P200 BN200L4**	453
58	4601	2.6	25.4	45500			**F903_25.4 P200 BN200L4**	459
58	4572	1.2	25.2	29500			**F803_25.2 P200 BN200L4**	456
66	4039	3.0	22.3	44400			**F903_22.3 P200 BN200L4**	459
67	3992	1.7	22.0	29000			**F803_22.0 P200 BN200L4**	456
71	3728	3.0	20.6	43600			**F903_20.6 P200 BN200L4**	459
72	3685	1.7	20.3	28500			**F803_20.3 P200 BN200L4**	456
83	3209	1.4	17.7	21800			**F703_17.7 P200 BN200L4**	453
84	3190	2.1	17.6	27900			**F803_17.6 P200 BN200L4**	456
90	2963	1.4	16.3	21500			**F703_16.3 P200 BN200L4**	453
90	2945	2.1	16.2	27400			**F803_16.2 P200 BN200L4**	456
105	2534	2.7	14.0	26700			**F803_14.0 P200 BN200L4**	456
106	2517	1.5	13.9	21100			**F703_13.9 P200 BN200L4**	453
114	2339	2.7	12.9	26200			**F803_12.9 P200 BN200L4**	456
115	2323	1.5	12.8	20900			**F703_12.8 P200 BN200L4**	453
135	1967	1.8	10.9	20300			**F703_10.9 P200 BN200L4**	453
142	1874	3.0	10.3	24900			**F803_10.3 P200 BN200L4**	456
147	1815	1.8	10.0	20000			**F703_10.0 P200 BN200L4**	453

37 kW

n_2 min-1	M_2 Nm	S	i	R_{n2} N			IEC	
20.9	15710	0.9	70.8	47600			**F903_70.8 P225 IEC225S4**	459
25.8	12728	1.1	57.3	47700			**F903_57.3 P225 IEC225S4**	459
29.7	11079	1.3	49.9	47600			**F903_49.9 P225 IEC225S4**	459
32	10227	1.4	46.1	47200			**F903_46.1 P225 IEC225S4**	459
37	8993	1.6	40.5	46800			**F903_40.5 P225 IEC225S4**	459
38	8659	0.9	39.0	28500			**F803_39.0 P225 IEC225S4**	456
40	8301	1.6	37.4	46300			**F903_37.4 P225 IEC225S4**	459
41	7993	1.0	36.0	28300			**F803_36.0 P225 IEC225S4**	456
47	6939	1.2	31.3	28400			**F803_31.3 P225 IEC225S4**	456
48	6882	1.9	31.0	45300			**F903_31.0 P225 IEC225S4**	459
51	6405	1.2	28.8	28100			**F803_28.8 P225 IEC225S4**	456
52	6353	1.9	28.6	44700			**F903_28.6 P225 IEC225S4**	459
58	5637	2.1	25.4	43900			**F903_25.4 P225 IEC225S4**	459

***Die technischen Daten müssen als Anhaltswert betrachtet werden, die genaue Konfiguration muss mit den Daten der Motorenlieferanten für Motoren mit Leistungen größer als 30kW abgestimmt werden.**

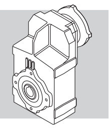

37 kW

n_2 min^{-1}	M_2 Nm	S	i	R_{n2} N			IEC	
59	5601	1.1	25.2	27800			**F803_25.2 P225 IEC225S4**	456
66	4947	2.4	22.3	43000			**F903_22.3 P225 IEC225S4**	459
67	4891	1.1	22.0	27600			**F803_22.0 P225 IEC225S4**	456
72	4567	2.5	20.6	42300			**F903_20.6 P225 IEC225S4**	459
73	4515	1.1	20.3	27200			**F803_20.3 P225 IEC225S4**	456
83	3975	2.8	17.9	41200			**F903_17.9 P225 IEC225S4**	459
84	3908	1.7	17.6	26800			**F803_17.6 P225 IEC225S4**	456
90	3669	2.8	16.5	40500			**F903_16.5 P225 IEC225S4**	459
91	3607	1.7	16.2	26300			**F803_16.2 P225 IEC225S4**	456
102	3226	3.1	14.5	39500			**F903_14.5 P225 IEC225S4**	459
106	3104	2.2	14.0	25800			**F803_14.0 P225 IEC225S4**	456
110	2978	3.1	13.4	38700			**F903_13.4 P225 IEC225S4**	459
115	2865	2.2	12.9	25300			**F803_12.9 P225 IEC225S4**	456
132	2487	2.4	11.2	24500			**F803_11.2 P225 IEC225S4**	456
143	2296	2.4	10.3	24300			**F803_10.3 P225 IEC225S4**	456

45 kW

n_2 min^{-1}	M_2 Nm	S	i	R_{n2} N			IEC	
32	12438	1.1	46.1	43900			**F903_46.1 P225 IEC225M4**	459
37	10937	1.3	40.5	43900			**F903_40.5 P225 IEC225M4**	459
40	10096	1.3	37.4	43600			**F903_37.4 P225 IEC225M4**	459
47	8439	0.9	31.3	26100			**F803_31.3 P225 IEC225M4**	456
48	8370	1.6	31.0	43100			**F903_31.0 P225 IEC225M4**	459
51	7790	1.0	28.8	26000			**F803_28.8 P225 IEC225M4**	456
52	7726	1.6	28.6	42600			**F903_28.6 P225 IEC225M4**	459
58	6855	1.8	25.4	42000			**F903_25.4 P225 IEC225M4**	459
66	6017	2.0	22.3	41400			**F903_22.3 P225 IEC225M4**	459
67	5948	1.1	22.0	26000			**F803_22.0 P225 IEC225M4**	456
72	5554	2.0	20.6	40800			**F903_20.6 P225 IEC225M4**	459
73	5491	1.1	20.3	25700			**F803_20.3 P225 IEC225M4**	456
83	4834	2.3	17.9	39900			**F903_17.9 P225 IEC225M4**	459
84	4753	1.4	17.6	25500			**F803_17.6 P225 IEC225M4**	456
90	4463	2.3	16.5	39300			**F903_16.5 P225 IEC225M4**	459
91	4387	1.4	16.2	25200			**F803_16.2 P225 IEC225M4**	456
102	3924	2.5	14.5	38400			**F903_14.5 P225 IEC225M4**	459
106	3775	1.8	14.0	24800			**F803_14.0 P225 IEC225M4**	456
110	3622	2.6	13.4	37800			**F903_13.4 P225 IEC225M4**	459
115	3484	1.8	12.9	24100			**F803_12.9 P225 IEC225M4**	456
132	3025	1.5	11.2	24000			**F803_11.2 P225 IEC225M4**	456
133	3003	2.9	11.1	36400			**F903_11.1 P225 IEC225M4**	459
143	2792	2.0	10.3	23500			**F803_10.3 P225 IEC225M4**	456

***Die technischen Daten müssen als Anhaltswert betrachtet werden, die genaue Konfiguration muss mit den Daten der Motorenlieferanten für Motoren mit Leistungen größer als 30kW abgestimmt werden.**

55 kW

n_2 min^{-1}	M_2 Nm	S	i	R_{n2} N			IEC	
32	15202	0.9	46.1	39700			**F903_46.1 P250 IEC250M4**	459
37	13367	1.0	40.5	40300			**F903_40.5 P250 IEC250M4**	459
40	12339	1.1	37.4	40200			**F903_37.4 P250 IEC250M4**	459
48	10230	1.3	31.0	40300			**F903_31.0 P250 IEC250M4**	459
52	9443	1.3	28.6	40100			**F903_28.6 P250 IEC250M4**	459
58	8379	1.4	25.4	39700			**F903_25.4 P250 IEC250M4**	459
66	7354	1.6	22.3	39400			**F903_22.3 P250 IEC250M4**	459
72	6788	1.7	20.6	38900			**F903_20.6 P250 IEC250M4**	459
83	5909	1.9	17.9	38300			**F903_17.9 P250 IEC250M4**	459
90	5454	1.9	16.5	37800			**F903_16.5 P250 IEC250M4**	459
102	4796	2.1	14.5	37100			**F903_14.5 P250 IEC250M4**	459
110	4427	2.1	13.4	36600			**F903_13.4 P250 IEC250M4**	459
133	3671	2.4	11.1	35400			**F903_11.1 P250 IEC250M4**	459
144	3388	2.4	10.3	34800			**F903_10.3 P250 IEC250M4**	459

***Die technischen Daten müssen als Anhaltswert betrachtet werden, die genaue Konfiguration muss mit den Daten der Motorenlieferanten für Motoren mit Leistungen größer als 30kW abgestimmt werden.**

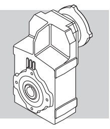

F 10 140 Nm

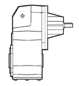	i	n_1 = 2800 min^{-1}					n_1 = 1400 min^{-1}					
		n_2 min^{-1}	M_{n2} Nm	P_{n1} kW	R_{n1} N	R_{n2} N	n_2 min^{-1}	M_{n2} Nm	P_{n1} kW	R_{n1} N	R_{n2} N	
F 10 2_7.4	7.4	378	63	2.6	1000	1290	189	76	1.6	1290	1640	425
F 10 2_8.6	8.6	326	67	2.4	980	1350	163	82	1.5	1260	1710	
F 10 2_9.8	9.8	287	73	2.3	980	1410	143	89	1.4	1250	1780	
F 10 2_11.5	11.5	243	78	2.1	950	1480	121	96	1.3	1220	1870	
F 10 2_13.0	13.0	215	85	2.0	940	1530	107	104	1.2	1210	1940	
F 10 2_14.6	14.6	191	94	2.0	1120	1590	96	119	1.3	1300	2000	
F 10 2_17.0	17.0	165	104	1.9	1090	1650	82	128	1.2	1300	2090	
F 10 2_19.3	19.3	145	108	1.7	1100	1730	72	136	1.1	1300	2180	
F 10 2_22.8	22.8	123	119	1.6	1080	1810	61	140	0.95	1300	2310	
F 10 2_25.8	25.8	109	123	1.5	1090	1890	54	140	0.84	1300	2430	
F 10 2_29.6	29.6	94	132	1.4	1060	1970	47	140	0.73	1300	2560	
F 10 2_33.0	33.0	85	137	1.3	1070	2040	42	140	0.65	1300	2670	
F 10 2_35.3	35.3	79	140	1.2	1060	2090	40	140	0.61	1300	2740	
F 10 2_39.6	39.6	71	140	1.1	1080	2190	35	140	0.54	1300	2800	
F 10 2_44.7	44.7	63	140	0.97	1080	2290	31	140	0.48	1300	2800	
F 10 2_48.7	48.7	57	140	0.89	1090	2370	28.7	140	0.44	1300	2800	
F 10 2_56.7	56.7	49	140	0.76	1100	2520	24.7	140	0.38	1300	2800	
F 10 2_63.0	63.0	44	140	0.69	1110	2620	22.2	140	0.34	1300	2800	
F 10 2_71.1	71.1	39	140	0.61	1000	2750	19.7	140	0.30	1300	2800	
F 10 2_81.3	81.3	34	140	0.53	1110	2800	17.2	140	0.27	1300	2800	
F 10 2_91.5	91.5	31	140	0.47	1110	2800	15.3	140	0.24	1300	2800	
F 10 2_106.0	106.0	26.4	140	0.41	1120	2800	13.2	140	0.20	1300	2800	
F 10 2_127.1	127.1	22.0	140	0.34	1130	2800	11.0	140	0.17	1300	2800	

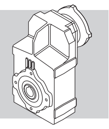

F 10 140 Nm

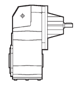	i	n_1 = 900 min^{-1}					n_1 = 500 min^{-1}					
		n_2 min^{-1}	M_{n2} Nm	P_{n1} kW	R_{n1} N	R_{n2} N	n_2 min^{-1}	M_{n2} Nm	P_{n1} kW	R_{n1} N	R_{n2} N	
F 10 2_7.4	7.4	122	91	1.2	1300	1890	68	111	0.83	1300	2300	425
F 10 2_8.6	8.6	105	94	1.1	1300	1970	58	112	0.72	1300	2430	
F 10 2_9.8	9.8	92	107	1.1	1300	2050	51	130	0.73	1300	2490	
F 10 2_11.5	11.5	78	110	0.95	1300	2180	43	131	0.63	1300	2660	
F 10 2_13.0	13.0	69	124	0.94	1300	2240	38	140	0.59	1300	2800	
F 10 2_14.6	14.6	61	138	0.93	1300	2320	34	140	0.53	1300	2800	
F 10 2_17.0	17.0	53	140	0.82	1300	2450	29.5	140	0.46	1300	2800	
F 10 2_19.3	19.3	47	140	0.72	1300	2580	25.9	140	0.40	1300	2800	
F 10 2_22.8	22.8	39	140	0.61	1300	2750	21.9	140	0.34	1300	2800	
F 10 2_25.8	25.8	35	140	0.54	1300	2800	19.4	140	0.30	1300	2800	
F 10 2_29.6	29.6	30	140	0.47	1300	2800	16.9	140	0.26	1300	2800	
F 10 2_33.0	33.0	27.3	140	0.42	1300	2800	15.2	140	0.23	1300	2800	
F 10 2_35.3	35.3	25.5	140	0.39	1300	2800	14.1	140	0.22	1300	2800	
F 10 2_39.6	39.6	22.7	140	0.35	1300	2800	12.6	140	0.19	1300	2800	
F 10 2_44.7	44.7	20.1	140	0.31	1300	2800	11.2	140	0.17	1300	2800	
F 10 2_48.7	48.7	18.5	140	0.29	1300	2800	10.3	140	0.16	1300	2800	
F 10 2_56.7	56.7	15.9	140	0.24	1300	2800	8.8	140	0.14	1300	2800	
F 10 2_63.0	63.0	14.3	140	0.22	1300	2800	7.9	140	0.12	1300	2800	
F 10 2_71.1	71.1	12.7	140	0.20	1300	2800	7.0	140	0.11	1300	2800	
F 10 2_81.3	81.3	11.1	140	0.17	1300	2800	6.1	140	0.09	1300	2800	
F 10 2_91.5	91.5	9.8	140	0.15	1300	2800	5.5	140	0.08	1300	2800	
F 10 2_106.0	106.0	8.5	140	0.13	1300	2800	4.7	140	0.07	1300	2800	
F 10 2_127.1	127.1	7.1	140	0.11	1300	2800	3.9	140	0.06	1300	2800	

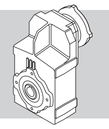

F 20 250 Nm

	i	n_1 = 2800 min-1					n_1 = 1400 min-1					
		n_2 min-1	M_{n2} Nm	P_{n1} kW	R_{n1} N	R_{n2} N	n_2 min-1	M_{n2} Nm	P_{n1} kW	R_{n1} N	R_{n2} N	
F 20 2_6.4	6.4	437	103	5.0	—	1370	218	130	3.1	—	1720	429
F 20 2_7.8	7.8	357	115	4.5	—	1440	179	144	2.8	—	1820	
F 20 2_8.7	8.7	321	123	4.3	—	1490	160	155	2.7	—	1870	
F 20 2_10.0	10.0	279	131	4.0	—	1550	140	165	2.5	—	1950	
F 20 2_11.2	11.2	249	141	3.9	—	1590	125	177	2.4	—	2010	
F 20 2_14.8	14.8	189	166	3.5	760	1740	95	203	2.1	1010	2210	
F 20 2_18.1	18.1	155	175	3.0	750	1870	77	213	1.8	1020	2380	
F 20 2_20.2	20.2	139	182	2.8	810	1940	69	223	1.7	1070	2460	
F 20 2_23.1	23.1	121	190	2.5	770	2030	60	235	1.6	1000	2570	
F 20 2_25.9	25.9	108	196	2.3	830	2110	54	240	1.4	1100	2680	
F 20 2_30.4	30.4	92	205	2.1	780	2230	46	250	1.3	1050	2840	
F 20 2_33.1	33.1	85	210	2.0	800	2300	42	250	1.2	1120	2940	
F 20 2_37.9	37.9	74	220	1.8	740	2400	37	250	1.0	1130	3110	
F 20 2_41.8	41.8	67	225	1.7	780	2490	33	250	0.92	1220	3240	
F 20 2_44.8	44.8	62	235	1.6	690	2540	31	250	0.86	1200	3330	
F 20 2_50.7	50.7	55	238	1.4	780	2660	27.6	250	0.76	1320	3500	
F 20 2_56.7	56.7	49	250	1.4	730	2750	24.7	250	0.68	1360	3660	
F 20 2_61.9	61.9	45	250	1.2	750	2860	22.6	250	0.62	1370	3790	
F 20 2_69.1	69.1	40	250	1.1	760	2990	20.2	250	0.56	1370	3950	
F 20 2_76.8	76.8	36	250	1.0	780	3130	18.2	250	0.50	1380	4000	
F 20 2_90.4	90.4	31	250	0.85	830	3340	15.5	250	0.43	1390	4000	
F 20 2_101.6	101.6	27.5	250	0.76	830	3500	13.8	250	0.38	1390	4000	
F 20 2_114.3	114.3	24.5	250	0.67	850	3670	12.2	250	0.34	1400	4000	
F 20 2_132.2	132.2	21.2	250	0.58	870	3890	10.6	250	0.29	1400	4000	
F 20 3_156.3	156.3	17.9	250	0.50	1170	4000	9.0	250	0.25	1300	4000	
F 20 3_172.6	172.6	16.2	250	0.46	1200	4000	8.1	250	0.23	1300	4000	
F 20 3_184.9	184.9	15.1	250	0.43	1210	4000	7.6	250	0.21	1300	4000	
F 20 3_209.3	209.3	13.4	250	0.38	1240	4000	6.7	250	0.19	1300	4000	
F 20 3_234.0	234.0	12.0	250	0.34	1270	4000	6.0	250	0.17	1300	4000	
F 20 3_255.3	255.3	11.0	250	0.31	1280	4000	5.5	250	0.15	1300	4000	
F 20 3_285.2	285.2	9.8	250	0.28	1300	4000	4.9	250	0.14	1300	4000	
F 20 3_316.9	316.9	8.8	250	0.25	1300	4000	4.4	250	0.12	1300	4000	
F 20 3_372.9	372.9	7.5	250	0.21	1300	4000	3.8	250	0.11	1300	4000	
F 20 3_419.3	419.3	6.7	250	0.19	1300	4000	3.3	250	0.09	1300	4000	
F 20 3_471.7	471.7	5.9	250	0.17	1300	4000	3.0	250	0.08	1300	4000	
F 20 3_545.3	545.3	5.1	250	0.14	1300	4000	2.6	250	0.07	1300	4000	

(—) Nehmen Sie bitte Kontakt mit unserem technischen Service auf und benennen die Querkraftsdaten (Drehrichtung, Orientierung, Anordnung)

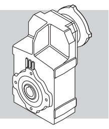

F 20 250 Nm

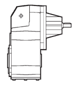	i	$n_1 = 900$ min^{-1}					$n_1 = 500$ min^{-1}					
		n_2	M_{n2}	P_{n1}	R_{n1}	R_{n2}	n_2	M_{n2}	P_{n1}	R_{n1}	R_{n2}	
		min^{-1}	Nm	kW	N	N	min^{-1}	Nm	kW	N	N	
F 20 2_6.4	6.4	140	150	2.3	—	1990	218	183	4.4	—	2420	429
F 20 2_7.8	7.8	115	167	2.1	—	2110	64	189	1.3	—	2610	
F 20 2_8.7	8.7	103	180	2.0	—	2170	57	219	1.4	—	2640	
F 20 2_10.0	10.0	90	191	1.9	—	2260	50	221	1.2	—	2790	
F 20 2_11.2	11.2	80	205	1.8	—	2330	45	250	1.2	—	2830	
F 20 2_14.8	14.8	61	232	1.6	1210	2570	34	250	0.93	1790	3230	
F 20 2_18.1	18.1	50	250	1.4	1150	2740	27.7	250	0.76	1910	3500	
F 20 2_20.2	20.2	45	250	1.2	1320	2870	24.8	250	0.68	1960	3650	
F 20 2_23.1	23.1	39	250	1.1	1350	3040	21.6	250	0.60	1970	3860	
F 20 2_25.9	25.9	35	250	0.96	1500	3190	19.3	250	0.53	2010	4000	
F 20 2_30.4	30.4	29.6	250	0.82	1530	3400	16.5	250	0.45	2020	4000	
F 20 2_33.1	33.1	27.2	250	0.75	1580	3520	15.1	250	0.42	2040	4000	
F 20 2_37.9	37.9	23.8	250	0.65	1590	3720	13.2	250	0.36	2040	4000	
F 20 2_41.8	41.8	21.5	250	0.59	1610	3870	12.0	250	0.33	2070	4000	
F 20 2_44.8	44.8	20.1	250	0.55	1610	3970	11.2	250	0.31	2060	4000	
F 20 2_50.7	50.7	17.7	250	0.49	1640	4000	9.9	250	0.27	2090	4000	
F 20 2_56.7	56.7	15.9	250	0.44	1650	4000	8.8	250	0.24	2110	4000	
F 20 2_61.9	61.9	14.5	250	0.40	1660	4000	8.1	250	0.22	2110	4000	
F 20 2_69.1	69.1	13.0	250	0.36	1660	4000	7.2	250	0.20	2110	4000	
F 20 2_76.8	76.8	11.7	250	0.32	1670	4000	6.5	250	0.18	2120	4000	
F 20 2_90.4	90.4	10.0	250	0.27	1680	4000	5.5	250	0.15	2130	4000	
F 20 2_101.6	101.6	8.9	250	0.24	1680	4000	4.9	250	0.14	2130	4000	
F 20 2_114.3	114.3	7.9	250	0.22	1690	4000	4.4	250	0.12	2140	4000	
F 20 2_132.2	132.2	6.8	250	0.19	1690	4000	3.8	250	0.10	2150	4000	
F 20 3_156.3	156.3	5.8	250	0.16	1300	4000	3.2	250	0.09	1300	4000	
F 20 3_172.6	172.6	5.2	250	0.15	1300	4000	2.9	250	0.08	1300	4000	
F 20 3_184.9	184.9	4.9	250	0.14	1300	4000	2.7	250	0.08	1300	4000	
F 20 3_209.3	209.3	4.3	250	0.12	1300	4000	2.4	250	0.07	1300	4000	
F 20 3_234.0	234.0	3.8	250	0.11	1300	4000	2.1	250	0.06	1300	4000	
F 20 3_255.3	255.3	3.5	250	0.10	1300	4000	2.0	250	0.06	1300	4000	
F 20 3_285.2	285.2	3.2	250	0.09	1300	4000	1.8	250	0.05	1300	4000	
F 20 3_316.9	316.9	2.8	250	0.08	1300	4000	1.6	250	0.04	1300	4000	
F 20 3_372.9	372.9	2.4	250	0.07	1300	4000	1.3	250	0.04	1300	4000	
F 20 3_419.3	419.3	2.1	250	0.06	1300	4000	1.2	250	0.03	1300	4000	
F 20 3_471.7	471.7	1.9	250	0.05	1300	4000	1.1	250	0.03	1300	4000	
F 20 3_545.3	545.3	1.7	250	0.05	1300	4000	0.92	250	0.03	1300	4000	

(—) Nehmen Sie bitte Kontakt mit unserem technischen Service auf und benennen die Querkraftsdaten (Drehrichtung, Orientierung, Anordnung)

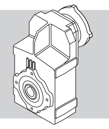

F 25 400 Nm

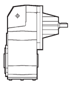	i	n1 = 2800 min-1					n1 = 1400 min-1					
		n_2 min-1	M_{n2} Nm	P_{n1} kW	R_{n1} N	R_{n2} N	n_2 min-1	M_{n2} Nm	P_{n1} kW	R_{n1} N	R_{n2} N	
F 25 2_6.9	6.9	408	155	7.0	—	1840	204	195	4.4	—	2320	433
F 25 2_8.4	8.4	334	170	6.3	—	1950	167	215	4.0	—	2450	
F 25 2_9.4	9.4	299	180	5.9	—	2010	150	225	3.7	—	2540	
F 25 2_10.6	10.6	264	240	7.0	—	1850	132	305	4.4	—	2320	
F 25 2_13.0	13.0	216	255	6.1	—	1990	108	320	3.8	—	2510	
F 25 2_14.5	14.5	194	260	5.5	—	2080	97	330	3.5	—	2610	
F 25 2_16.6	16.6	168	270	5.0	—	2190	84	340	3.2	—	2760	
F 25 2_18.6	18.6	150	280	4.6	—	2270	75	350	2.9	—	2870	
F 25 2_21.8	21.8	128	280	4.0	—	2460	64	355	2.5	250	3090	
F 25 2_23.8	23.8	118	285	3.7	250	2540	59	360	2.3	300	3200	
F 25 2_27.2	27.2	103	290	3.3	250	2690	51	365	2.1	320	3400	
F 25 2_30.0	30.0	93	295	3.0	310	2800	47	370	1.9	410	3540	
F 25 2_32.2	32.2	87	295	2.8	310	2900	44	370	1.8	410	3660	
F 25 2_36.4	36.4	77	295	2.5	460	3070	38	370	1.6	600	3880	
F 25 2_40.7	40.7	69	295	2.2	560	3230	34	370	1.4	720	4080	
F 25 2_44.4	44.4	63	295	2.0	720	3360	32	370	1.3	720	4250	
F 25 3_45.6	45.6	61	340	2.4	1440	3100	31	400	1.4	1830	4030	
F 25 3_50.8	50.8	55	350	2.2	1450	3230	27.6	400	1.2	1850	4250	
F 25 3_58.3	58.3	48	365	2.0	1450	3390	24.0	400	1.1	1860	4530	
F 25 3_65.3	65.3	43	375	1.8	1450	3530	21.4	400	0.97	1870	4780	
F 25 3_76.6	76.6	37	395	1.6	1450	3730	18.3	400	0.82	1880	5140	
F 25 3_83.4	83.4	34	400	1.5	1450	3860	16.8	400	0.76	1880	5330	
F 25 3_95.5	95.5	29.3	400	1.3	1460	4130	14.7	400	0.66	1890	5660	
F 25 3_105.4	105.4	26.6	400	1.2	1470	4320	13.3	400	0.60	1890	5910	
F 25 3_113.0	113.0	24.8	400	1.1	1470	4470	12.4	400	0.56	1890	6090	
F 25 3_127.8	127.8	21.9	400	0.99	1480	4730	11.0	400	0.49	1900	6430	
F 25 3_143.0	143.0	19.6	400	0.88	1480	4980	9.8	400	0.44	1910	6500	
F 25 3_155.9	155.9	18.0	400	0.81	1480	5180	9.0	400	0.40	1910	6500	
F 25 3_174.2	174.2	16.1	400	0.72	1490	5440	8.0	400	0.36	1910	6500	
F 25 3_193.6	193.6	14.5	400	0.65	1490	5700	7.2	400	0.33	1910	6500	
F 25 3_227.8	227.8	12.3	400	0.55	1490	6120	6.1	400	0.28	1920	6500	
F 25 3_256.1	256.1	10.9	400	0.49	1490	6430	5.5	400	0.25	1920	6500	
F 25 3_288.1	288.1	9.7	400	0.44	1490	6500	4.9	400	0.22	1920	6500	
F 25 3_333.1	333.1	8.4	400	0.38	1500	6500	4.2	400	0.19	1930	6500	
F 25 4_393.9	393.9	7.1	400	0.33	1270	6500	3.6	400	0.17	1300	6500	
F 25 4_434.9	434.9	6.4	400	0.30	1290	6500	3.2	400	0.15	1300	6500	
F 25 4_466.0	466.0	6.0	400	0.28	1300	6500	3.0	400	0.14	1300	6500	
F 25 4_527.3	527.3	5.3	400	0.25	1300	6500	2.7	400	0.12	1300	6500	
F 25 4_589.7	589.7	4.7	400	0.22	1300	6500	2.4	400	0.11	1300	6500	
F 25 4_643.3	643.3	4.4	400	0.20	1300	6500	2.2	400	0.10	1300	6500	
F 25 4_718.7	718.7	3.9	400	0.18	1300	6500	1.9	400	0.09	1300	6500	
F 25 4_798.5	798.5	3.5	400	0.16	1300	6500	1.8	400	0.08	1300	6500	
F 25 4_939.8	939.8	3.0	400	0.14	1300	6500	1.5	400	0.07	1300	6500	
F 25 4_1057	1057	2.7	400	0.12	1300	6500	1.3	400	0.06	1300	6500	
F 25 4_1189	1189	2.4	400	0.11	1300	6500	1.2	400	0.05	1300	6500	
F 25 4_1374	1374	2.0	400	0.09	1300	6500	1.0	400	0.05	1300	6500	

(—) Nehmen Sie bitte Kontakt mit unserem technischen Service auf und benennen die Querkraftsdaten (Drehrichtung, Orientierung, Anordnung)

F 25 400 Nm

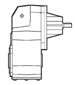	i	n_1 = 900 min^{-1}					n_1 = 500 min^{-1}					
		n_2 min^{-1}	M_{n2} Nm	P_{n1} kW	R_{n1} N	R_{n2} N	n_2 min^{-1}	M_{n2} Nm	P_{n1} kW	R_{n1} N	R_{n2} N	
F 25 2_6.9	6.9	131	225	3.2	—	2690	73	255	2.0	370	3350	433
F 25 2_8.4	8.4	107	250	3.0	—	2840	60	260	1.7	590	3630	
F 25 2_9.4	9.4	96	260	2.8	—	2940	53	265	1.6	820	3780	
F 25 2_10.6	10.6	85	355	3.3	—	2680	47	395	2.0	360	3420	
F 25 2_13.0	13.0	69	370	2.8	—	2910	39	400	1.7	620	3750	
F 25 2_14.5	14.5	62	380	2.6	—	3030	35	400	1.5	940	3950	
F 25 2_16.6	16.6	54	395	2.4	—	3190	30	400	1.3	1070	4210	
F 25 2_18.6	18.6	48	400	2.1	300	3350	26.9	400	1.2	1330	4440	
F 25 2_21.8	21.8	41	400	1.8	420	3630	22.9	400	1.0	1450	4770	
F 25 2_23.8	23.8	38	400	1.7	530	3780	21.0	400	0.93	1560	4950	
F 25 2_27.2	27.2	33	400	1.5	610	4030	18.4	400	0.81	1640	5260	
F 25 2_30.0	30.0	30	400	1.3	760	4220	16.6	400	0.73	1790	5490	
F 25 2_32.2	32.2	28.0	400	1.2	760	4360	15.5	400	0.69	1790	5660	
F 25 2_36.4	36.4	24.7	400	1.1	970	4610	13.7	400	0.61	2000	5970	
F 25 2_40.7	40.7	22.1	375	0.91	1330	4950	12.3	375	0.51	2000	6360	
F 25 2_44.4	44.4	20.3	385	0.86	1230	5100	11.3	385	0.48	2000	6500	
F 25 3_45.6	45.6	19.8	400	0.89	2160	4960	11.0	400	0.49	2200	6420	
F 25 3_50.8	50.8	17.7	400	0.80	2180	5210	9.8	400	0.44	2200	6500	
F 25 3_58.3	58.3	15.4	400	0.69	2190	5540	8.6	400	0.39	2200	6500	
F 25 3_65.3	65.3	13.8	400	0.62	2200	5820	7.7	400	0.34	2200	6500	
F 25 3_76.6	76.6	11.8	400	0.53	2200	6240	6.5	400	0.29	2200	6500	
F 25 3_83.4	83.4	10.8	400	0.49	2200	6470	6.0	400	0.27	2200	6500	
F 25 3_95.5	95.5	9.4	400	0.42	2200	6500	5.2	400	0.24	2200	6500	
F 25 3_105.4	105.4	8.5	400	0.38	2200	6500	4.7	400	0.21	2200	6500	
F 25 3_113.0	113.0	8.0	400	0.36	2200	6500	4.4	400	0.20	2200	6500	
F 25 3_127.8	127.8	7.0	400	0.32	2200	6500	3.9	400	0.18	2200	6500	
F 25 3_143.0	143.0	6.3	400	0.28	2200	6500	3.5	400	0.16	2200	6500	
F 25 3_155.9	155.9	5.8	400	0.26	2200	6500	3.2	400	0.14	2200	6500	
F 25 3_174.2	174.2	5.2	400	0.23	2200	6500	2.9	400	0.13	2200	6500	
F 25 3_193.6	193.6	4.6	400	0.21	2200	6500	2.6	400	0.12	2200	6500	
F 25 3_227.8	227.8	4.0	400	0.18	2200	6500	2.2	400	0.10	2200	6500	
F 25 3_256.1	256.1	3.5	400	0.16	2200	6500	2.0	400	0.09	2200	6500	
F 25 3_288.1	288.1	3.1	400	0.14	2200	6500	1.7	400	0.08	2200	6500	
F 25 3_333.1	333.1	2.7	400	0.12	2200	6500	1.5	400	0.07	2200	6500	
F 25 4_393.9	393.9	2.3	400	0.11	1300	6500	1.3	400	0.06	1300	6500	
F 25 4_434.9	434.9	2.1	400	0.10	1300	6500	1.1	400	0.05	1300	6500	
F 25 4_466.0	466.0	1.9	400	0.09	1300	6500	1.1	400	0.05	1300	6500	
F 25 4_527.3	527.3	1.7	400	0.08	1300	6500	0.95	400	0.04	1300	6500	
F 25 4_589.7	589.7	1.5	400	0.07	1300	6500	0.85	400	0.04	1300	6500	
F 25 4_643.3	643.3	1.4	400	0.07	1300	6500	0.78	400	0.04	1300	6500	
F 25 4_718.7	718.7	1.3	400	0.06	1300	6500	0.70	400	0.03	1300	6500	
F 25 4_798.5	798.5	1.1	400	0.05	1300	6500	0.63	400	0.03	1300	6500	
F 25 4_939.8	939.8	0.96	400	0.04	1300	6500	0.53	400	0.02	1300	6500	
F 25 4_1057	1057	0.85	400	0.04	1300	6500	0.47	400	0.02	1300	6500	
F 25 4_1189	1189	0.76	400	0.04	1300	6500	0.42	400	0.02	1300	6500	
F 25 4_1374	1374	0.65	400	0.03	1300	6500	0.36	400	0.02	1300	6500	

(—) Nehmen Sie bitte Kontakt mit unserem technischen Service auf und benennen die Querkraftsdaten (Drehrichtung, Orientierung, Anordnung)

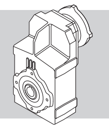

F 31 600 Nm

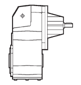	i	n_1 = 2800 min^{-1}					n_1 = 1400 min^{-1}					
		n_2 min^{-1}	M_{n2} Nm	P_{n1} kW	R_{n1} N	R_{n2} N	n_2 min^{-1}	M_{n2} Nm	P_{n1} kW	R_{n1} N	R_{n2} N	
F 31 2_6.9	6.9	403	295	13.1	—	2710	201	360	8.0	—	3460	437
F 31 2_8.2	8.2	340	310	11.6	—	2880	170	375	7.0	—	3690	
F 31 2_9.0	9.0	311	310	10.6	—	3000	155	385	6.6	390	3810	
F 31 2_10.7	10.7	261	450	12.9	—	2790	130	525	7.5	500	3670	
F 31 2_12.7	12.7	220	475	11.5	—	2950	110	555	6.7	490	3880	
F 31 2_13.9	13.9	201	475	10.5	290	3100	100	570	6.3	650	4010	
F 31 2_16.8	16.8	167	475	8.7	510	3410	83	595	5.5	680	4310	
F 31 2_18.5	18.5	151	475	7.9	730	3580	76	600	5.0	910	4510	
F 31 2_21.1	21.1	133	475	6.9	830	3830	66	600	4.4	1030	4820	
F 31 2_23.4	23.4	120	475	6.3	1020	4020	60	600	4.0	1270	5060	
F 31 2_27.3	27.3	103	475	5.4	1100	4330	51	600	3.4	1380	5450	
F 31 2_30.1	30.1	93	475	4.9	1270	4540	46	600	3.1	1590	5710	
F 31 2_34.4	34.4	81	475	4.3	1330	4820	41	600	2.7	1660	6070	
F 31 2_37.7	37.7	74	475	3.9	1430	5030	37	600	2.5	1800	6330	
F 31 2_40.4	40.4	69	475	3.6	1440	5190	35	600	2.3	1800	6500	
F 31 2_44.6	44.6	63	475	3.3	1540	5430	31	600	2.1	1930	6500	
F 31 3_47.5	47.5	59	475	3.1	2110	5490	29.4	580	1.9	2200	6500	
F 31 3_52.1	52.1	54	485	2.9	2120	5680	26.9	600	1.8	2200	6500	
F 31 3_62.8	62.8	45	515	2.6	2120	6040	22.3	600	1.5	2200	6500	
F 31 3_69.1	69.1	41	530	2.4	2130	6250	20.3	600	1.4	2200	6500	
F 31 3_78.9	78.9	36	550	2.2	2120	6500	17.8	600	1.2	2200	6500	
F 31 3_87.4	87.4	32	570	2.1	2130	6500	16.0	600	1.1	2200	6500	
F 31 3_101.9	101.9	27.5	595	1.8	2130	6500	13.7	600	0.93	2200	6500	
F 31 3_112.5	112.5	24.9	600	1.7	2130	6500	12.4	600	0.84	2200	6500	
F 31 3_128.4	128.4	21.8	600	1.5	2140	6500	10.9	600	0.74	2200	6500	
F 31 3_140.7	140.7	19.9	600	1.3	2140	6500	9.9	600	0.67	2200	6500	
F 31 3_150.8	150.8	18.6	600	1.3	2140	6500	9.3	600	0.63	2200	6500	
F 31 3_166.8	166.8	16.8	600	1.1	2150	6500	8.4	600	0.57	2200	6500	
F 31 3_185.4	185.4	15.1	600	1.0	2160	6500	7.5	600	0.51	2200	6500	
F 31 3_202.3	202.3	13.8	600	0.94	2160	6500	6.9	600	0.47	2200	6500	
F 31 3_228.2	228.2	12.3	600	0.83	2160	6500	6.1	600	0.41	2200	6500	
F 31 3_253.6	253.6	11.0	600	0.75	2160	6500	5.5	600	0.37	2200	6500	
F 31 3_293.8	293.8	9.5	600	0.64	2170	6500	4.8	600	0.32	2200	6500	
F 31 3_332.8	332.8	8.4	600	0.57	2170	6500	4.2	600	0.28	2200	6500	
F 31 3_374.4	374.4	7.5	600	0.51	2170	6500	3.7	600	0.25	2200	6500	
F 31 4_418.9	418.9	6.7	600	0.47	1230	6500	3.3	600	0.23	1300	6500	
F 31 4_462.6	462.6	6.1	600	0.42	1250	6500	3.0	600	0.21	1300	6500	
F 31 4_527.8	527.8	5.3	600	0.37	1270	6500	2.7	600	0.19	1300	6500	
F 31 4_578.6	578.6	4.8	600	0.34	1290	6500	2.4	600	0.17	1300	6500	
F 31 4_619.9	619.9	4.5	600	0.32	1300	6500	2.3	600	0.16	1300	6500	
F 31 4_685.6	685.6	4.1	600	0.29	1300	6500	2.0	600	0.14	1300	6500	
F 31 4_762.3	762.3	3.7	600	0.26	1300	6500	1.8	600	0.13	1300	6500	
F 31 4_831.6	831.6	3.4	600	0.24	1300	6500	1.7	600	0.12	1300	6500	
F 31 4_938.2	938.2	3.0	600	0.21	1300	6500	1.5	600	0.10	1300	6500	
F 31 4_1042	1042	2.7	600	0.19	1300	6500	1.3	600	0.09	1300	6500	
F 31 4_1208	1208	2.3	600	0.16	1300	6500	1.2	600	0.08	1300	6500	
F 31 4_1368	1368	2.0	600	0.14	1300	6500	1.0	600	0.07	1300	6500	
F 31 4_1539	1539	1.8	600	0.13	1300	6500	0.91	600	0.06	1300	6500	

(—) Nehmen Sie bitte Kontakt mit unserem technischen Service auf und benennen die Querkraftsdaten (Drehrichtung, Orientierung, Anordnung)

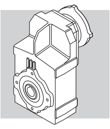

F 31 600 Nm

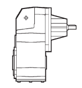	i	n_1 = 900 min^{-1}					n_1 = 500 min^{-1}					
		n_2	M_{n2}	P_{n1}	R_{n1}	R_{n2}	n_2	M_{n2}	P_{n1}	R_{n1}	R_{n2}	
		min^{-1}	Nm	kW	N	N	min^{-1}	Nm	kW	N	N	
F 31 2_6.9	6.9	130	390	5.6	640	4120	72	390	3.1	2200	5350	437
F 31 2_8.2	8.2	109	390	4.7	990	4450	61	390	2.6	2200	5760	
F 31 2_9.0	9.0	100	390	4.3	1320	4640	55	390	2.4	2200	5980	
F 31 2_10.7	10.7	84	600	5.5	670	4280	47	600	3.1	2200	5710	
F 31 2_12.7	12.7	71	600	4.7	1020	4670	39	600	2.6	2200	6170	
F 31 2_13.9	13.9	65	600	4.3	1350	4880	36	600	2.4	2200	6440	
F 31 2_16.8	16.8	54	600	3.5	1640	5340	29.8	600	2.0	2200	6500	
F 31 2_18.5	18.5	49	600	3.2	1915	5580	27.0	600	1.8	2200	6500	
F 31 2_21.1	21.1	43	600	2.8	2040	5950	23.7	600	1.6	2200	6500	
F 31 2_23.4	23.4	38	600	2.5	2200	6230	21.4	600	1.4	2200	6500	
F 31 2_27.3	27.3	33	600	2.2	2200	6500	18.3	600	1.2	2200	6500	
F 31 2_30.1	30.1	29.9	600	2.0	2200	6500	16.6	600	1.1	2200	6500	
F 31 2_34.4	34.4	26.2	600	1.7	2200	6500	14.6	600	0.96	2200	6500	
F 31 2_37.7	37.7	23.9	600	1.6	2200	6500	13.3	600	0.88	2200	6500	
F 31 2_40.4	40.4	22.3	600	1.5	2200	6500	12.4	600	0.82	2200	6500	
F 31 2_44.6	44.6	20.2	600	1.3	2200	6500	11.2	600	0.74	2200	6500	
F 31 3_47.5	47.5	18.9	600	1.3	2200	6500	10.5	600	0.71	2200	6500	
F 31 3_52.1	52.1	17.3	600	1.2	2200	6500	9.6	600	0.65	2200	6500	
F 31 3_62.8	62.8	14.3	600	0.97	2200	6500	8.0	600	0.54	2200	6500	
F 31 3_69.1	69.1	13.0	600	0.88	2200	6500	7.2	600	0.49	2200	6500	
F 31 3_78.9	78.9	11.4	600	0.77	2200	6500	6.3	600	0.43	2200	6500	
F 31 3_87.4	87.4	10.3	600	0.70	2200	6500	5.7	600	0.39	2200	6500	
F 31 3_101.9	101.9	8.8	600	0.60	2200	6500	4.9	600	0.33	2200	6500	
F 31 3_112.5	112.5	8.0	600	0.54	2200	6500	4.4	600	0.30	2200	6500	
F 31 3_128.4	128.4	7.0	600	0.47	2200	6500	3.9	600	0.26	2200	6500	
F 31 3_140.7	140.7	6.4	600	0.43	2200	6500	3.6	600	0.24	2200	6500	
F 31 3_150.8	150.8	6.0	600	0.40	2200	6500	3.3	600	0.22	2200	6500	
F 31 3_166.8	166.8	5.4	600	0.36	2200	6500	3.0	600	0.20	2200	6500	
F 31 3_185.4	185.4	4.9	600	0.33	2200	6500	2.7	600	0.18	2200	6500	
F 31 3_202.3	202.3	4.4	600	0.30	2200	6500	2.5	600	0.17	2200	6500	
F 31 3_228.2	228.2	3.9	600	0.27	2200	6500	2.2	600	0.15	2200	6500	
F 31 3_253.6	253.6	3.5	600	0.24	2200	6500	2.0	600	0.13	2200	6500	
F 31 3_293.8	293.8	3.1	600	0.21	2200	6500	1.7	600	0.11	2200	6500	
F 31 3_332.8	332.8	2.7	600	0.18	2200	6500	1.5	600	0.10	2200	6500	
F 31 3_374.4	374.4	2.4	600	0.16	2200	6500	1.3	600	0.09	2200	6500	
F 31 4_418.9	418.9	2.1	600	0.15	1300	6500	1.2	600	0.08	1300	6500	
F 31 4_462.6	462.6	1.9	600	0.14	1300	6500	1.1	600	0.08	1300	6500	
F 31 4_527.8	527.8	1.7	600	0.12	1300	6500	0.95	600	0.07	1300	6500	
F 31 4_578.6	578.6	1.6	600	0.11	1300	6500	0.86	600	0.06	1300	6500	
F 31 4_619.9	619.9	1.5	600	0.10	1300	6500	0.81	600	0.06	1300	6500	
F 31 4_685.6	685.6	1.3	600	0.09	1300	6500	0.73	600	0.05	1300	6500	
F 31 4_762.3	762.3	1.2	600	0.08	1300	6500	0.66	600	0.05	1300	6500	
F 31 4_831.6	831.6	1.1	600	0.08	1300	6500	0.60	600	0.04	1300	6500	
F 31 4_938.2	938.2	0.96	600	0.07	1300	6500	0.53	600	0.04	1300	6500	
F 31 4_1042	1042	0.86	600	0.06	1300	6500	0.48	600	0.03	1300	6500	
F 31 4_1208	1208	0.75	600	0.05	1300	6500	0.41	600	0.03	1300	6500	
F 31 4_1368	1368	0.66	600	0.05	1300	6500	0.37	600	0.03	1300	6500	
F 31 4_1539	1539	0.58	600	0.04	1300	6500	0.32	600	0.02	1300	6500	

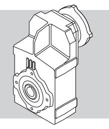

F 41 1100 Nm

	i	n_1 = 2800 min^{-1}					n_1 = 1400 min^{-1}					
		n_2 min^{-1}	M_{n2} Nm	P_{n1} kW	R_{n1} N	R_{n2} N	n_2 min^{-1}	M_{n2} Nm	P_{n1} kW	R_{n1} N	R_{n2} N	
F 41 2_6.7	6.7	416	460	21	—	3410	208	580	13.3	—	4290	441
F 41 2_9.1	9.1	306	515	17.4	—	3750	153	650	11.0	—	4730	
F 41 2_10.8	10.8	260	715	21	—	3310	130	900	12.9	—	4170	
F 41 2_14.6	14.6	191	805	17.0	—	3620	96	1015	10.7	—	4560	
F 41 2_17.1	17.1	164	835	15.1	—	3860	82	1055	9.5	—	4850	
F 41 2_18.9	18.9	148	860	14.0	410	4000	74	1085	8.9	500	5030	
F 41 2_24.1	24.1	116	875	11.2	650	4540	58	1100	7.0	840	5730	
F 41 2_30.1	30.1	93	875	9.0	980	5130	46	1100	5.6	1260	6470	
F 41 2_38.2	38.2	73	875	7.1	1260	5810	37	1100	4.4	1600	7330	
F 41 2_47.9	47.9	58	850	5.5	1680	6600	29.2	1070	3.4	2120	8320	
F 41 3_51.5	51.5	54	880	5.4	3030	6750	27.2	1085	3.3	3500	8500	
F 41 3_60.2	60.2	46	930	4.9	3030	7100	23.2	1100	2.9	3500	8500	
F 41 3_66.5	66.5	42	980	4.6	3030	7280	21.1	1100	2.6	3500	8500	
F 41 3_84.9	84.9	33	1065	4.0	3030	7890	16.5	1100	2.0	3500	8500	
F 41 3_106.0	106.0	26.4	1100	3.3	3040	8500	13.2	1100	1.6	3500	8500	
F 41 3_134.4	134.4	20.8	1100	2.6	3050	8500	10.4	1100	1.3	3500	8500	
F 41 3_168.7	168.7	16.6	1100	2.1	3070	8500	8.3	1100	1.0	3500	8500	
F 41 3_180.7	180.7	15.5	1100	1.9	3070	8500	7.7	1100	0.96	3500	8500	
F 41 3_198.9	198.9	14.1	1100	1.7	3080	8500	7.0	1100	0.87	3500	8500	
F 41 3_220.1	220.1	12.7	1100	1.6	3090	8500	6.4	1100	0.79	3500	8500	
F 41 3_240.1	240.1	11.7	1100	1.4	3090	8500	5.8	1100	0.72	3500	8500	
F 41 3_266.9	266.9	10.5	1100	1.3	3090	8500	5.2	1100	0.65	3500	8500	
F 41 3_296.6	296.6	9.4	1100	1.2	3090	8500	4.7	1100	0.58	3500	8500	
F 41 3_344.8	344.8	8.1	1100	1.0	3100	8500	4.1	1100	0.50	3500	8500	
F 41 4_433.7	433.7	6.5	1100	0.83	1480	8500	3.2	1100	0.41	1910	8500	
F 41 4_549.8	549.8	5.1	1100	0.65	1520	8500	2.5	1100	0.33	1940	8500	
F 41 4_690.1	690.1	4.1	1100	0.52	1540	8500	2.0	1100	0.26	1970	8500	
F 41 4_739.4	739.4	3.8	1100	0.48	1550	8500	1.9	1100	0.24	1980	8500	
F 41 4_813.8	813.8	3.4	1100	0.44	1560	8500	1.7	1100	0.22	1990	8500	
F 41 4_900.5	900.5	3.1	1100	0.40	1570	8500	1.6	1100	0.20	2000	8500	
F 41 4_982.4	982.4	2.9	1100	0.36	1570	8500	1.4	1100	0.18	2000	8500	
F 41 4_1092	1092	2.6	1100	0.33	1580	8500	1.3	1100	0.16	2010	8500	
F 41 4_1213	1213	2.3	1100	0.30	1590	8500	1.2	1100	0.15	2020	8500	
F 41 4_1411	1411	2.0	1100	0.25	1600	8500	1.0	1100	0.13	2020	8500	

(—) Nehmen Sie bitte Kontakt mit unserem technischen Service auf und benennen die Querkraftsdaten (Drehrichtung, Orientierung, Anordnung)

F 41 1100 Nm

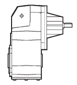	i	n_1 = 900 min^{-1}					n_1 = 500 min^{-1}					
		n_2 min^{-1}	M_{n2} Nm	P_{n1} kW	R_{n1} N	R_{n2} N	n_2 min^{-1}	M_{n2} Nm	P_{n1} kW	R_{n1} N	R_{n2} N	
F 41 2_6.7	6.7	134	670	9.9	—	4980	74	700	5.7	1760	6450	441
F 41 2_9.1	9.1	99	700	7.6	680	5660	55	700	4.2	2850	7410	
F 41 2_10.8	10.8	84	1025	9.4	480	4900	46	1100	5.6	1950	6480	
F 41 2_14.6	14.6	62	1100	7.5	860	5550	34	1100	4.1	3030	7590	
F 41 2_17.1	17.1	53	1100	6.4	1230	6060	29.2	1100	3.5	3400	8210	
F 41 2_18.9	18.9	48	1100	5.8	1760	6390	26.5	1100	3.2	3500	8500	
F 41 2_24.1	24.1	37	1100	4.5	2210	7260	20.7	1100	2.5	3500	8500	
F 41 2_30.1	30.1	29.9	1100	3.6	2630	8120	16.6	1100	2.0	3500	8500	
F 41 2_38.2	38.2	23.6	1100	2.9	2970	8500	13.1	1100	1.6	3500	8500	
F 41 2_47.9	47.9	18.8	1070	2.2	3490	8500	10.4	1070	1.2	3500	8500	
F 41 3_51.5	51.5	17.5	1100	2.2	3500	8500	9.7	1100	1.2	3500	8500	
F 41 3_60.2	60.2	14.9	1100	1.9	3500	8500	8.3	1100	1.0	3500	8500	
F 41 3_66.5	66.5	13.5	1100	1.7	3500	8500	7.5	1100	0.93	3500	8500	
F 41 3_84.9	84.9	10.6	1100	1.3	3500	8500	5.9	1100	0.73	3500	8500	
F 41 3_106.0	106.0	8.5	1100	1.1	3500	8500	4.7	1100	0.58	3500	8500	
F 41 3_134.4	134.4	6.7	1100	0.83	3500	8500	3.7	1100	0.46	3500	8500	
F 41 3_168.7	168.7	5.3	1100	0.66	3500	8500	3.0	1100	0.37	3500	8500	
F 41 3_180.7	180.7	5.0	1100	0.62	3500	8500	2.8	1100	0.34	3500	8500	
F 41 3_198.9	198.9	4.5	1100	0.56	3500	8500	2.5	1100	0.31	3500	8500	
F 41 3_220.1	220.1	4.1	1100	0.51	3500	8500	2.3	1100	0.28	3500	8500	
F 41 3_240.1	240.1	3.7	1100	0.46	3500	8500	2.1	1100	0.26	3500	8500	
F 41 3_266.9	266.9	3.4	1100	0.42	3500	8500	1.9	1100	0.23	3500	8500	
F 41 3_296.6	296.6	3.0	1100	0.38	3500	8500	1.7	1100	0.21	3500	8500	
F 41 3_344.8	344.8	2.6	1100	0.32	3500	8500	1.5	1100	0.18	3500	8500	
F 41 4_433.7	433.7	2.1	1100	0.27	2200	8500	1.2	1100	0.15	2200	8500	
F 41 4_549.8	549.8	1.6	1100	0.21	2200	8500	0.91	1100	0.12	2200	8500	
F 41 4_690.1	690.1	1.3	1100	0.17	2200	8500	0.72	1100	0.09	2200	8500	
F 41 4_739.4	739.4	1.2	1100	0.16	2200	8500	0.68	1100	0.09	2200	8500	
F 41 4_813.8	813.8	1.1	1100	0.14	2200	8500	0.61	1100	0.08	2200	8500	
F 41 4_900.5	900.5	1.0	1100	0.13	2200	8500	0.56	1100	0.07	2200	8500	
F 41 4_982.4	982.4	0.92	1100	0.12	2200	8500	0.51	1100	0.07	2200	8500	
F 41 4_1092	1092	0.82	1100	0.11	2200	8500	0.46	1100	0.06	2200	8500	
F 41 4_1213	1213	0.74	1100	0.09	2200	8500	0.41	1100	0.05	2200	8500	
F 41 4_1411	1411	0.64	1100	0.08	2200	8500	0.35	1100	0.05	2200	8500	

(—) Nehmen Sie bitte Kontakt mit unserem technischen Service auf und benennen die Querkraftsdaten (Drehrichtung, Orientierung, Anordnung)

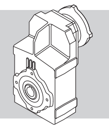

F 51 1800 Nm

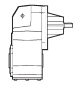	i	n_1 = 2800 min^{-1}					n_1 = 1400 min^{-1}					
		n_2 min^{-1}	M_{n2} Nm	P_{n1} kW	R_{n1} N	R_{n2} N	n_2 min^{-1}	M_{n2} Nm	P_{n1} kW	R_{n1} N	R_{n2} N	
F 51 2_7.2	7.2	389	775	33	990	4170	195	975	21	1440	5260	445
F 51 2_9.1	9.1	309	875	30	890	4400	155	1100	18.8	1320	5550	
F 51 2_11.1	11.1	252	1055	29	1460	4530	126	1330	18.5	2010	5700	
F 51 2_14.0	14.0	200	1125	25	1580	4920	100	1420	15.7	2150	6200	
F 51 2_18.8	18.8	149	1225	20	1660	5480	74	1545	12.7	2240	6900	
F 51 2_23.8	23.8	118	1310	17.0	1710	5960	59	1650	10.7	2290	7520	
F 51 2_30.0	30.0	93	1350	13.9	1760	6610	47	1700	8.7	2330	8340	
F 51 2_37.1	37.1	75	1350	11.2	1910	7350	38	1700	7.1	2410	9260	
F 51 3_48.9	48.9	57	1505	9.7	2600	7800	28.6	1800	5.8	3310	10100	
F 51 3_65.8	65.8	43	1650	7.9	2610	8640	21.3	1800	4.3	3380	11600	
F 51 3_83.2	83.2	34	1770	6.7	2630	9380	16.8	1800	3.4	3440	12000	
F 51 3_105.1	105.1	26.6	1800	5.4	2650	10400	13.3	1800	2.7	3460	12000	
F 51 3_129.9	129.9	21.6	1800	4.4	2670	11600	10.8	1800	2.2	3490	12000	
F 51 3_165.6	165.6	16.9	1800	3.4	2700	12000	8.5	1800	1.7	3500	12000	
F 51 3_202.4	202.4	13.8	1800	2.8	2710	12000	6.9	1800	1.4	3500	12000	
F 51 3_216.9	216.9	12.9	1800	2.6	2710	12000	6.5	1800	1.3	3500	12000	
F 51 3_239.8	239.8	11.7	1800	2.4	2730	12000	5.8	1800	1.2	3500	12000	
F 51 3_262.1	262.1	10.7	1800	2.2	2730	12000	5.3	1800	1.1	3500	12000	
F 51 3_285.9	285.9	9.8	1800	2.0	2730	12000	4.9	1800	0.99	3500	12000	
F 51 3_317.3	317.3	8.8	1800	1.8	2740	12000	4.4	1800	0.89	3500	12000	
F 51 3_352.5	352.5	7.9	1800	1.6	2740	12000	4.0	1800	0.80	3500	12000	
F 51 4_429.1	429.1	6.5	1800	1.4	1930	12000	3.3	1800	0.68	2200	12000	
F 51 4_530.5	530.5	5.3	1800	1.1	1970	12000	2.6	1800	0.55	2200	12000	
F 51 4_676.3	676.3	4.1	1800	0.87	2020	12000	2.1	1800	0.43	2200	12000	
F 51 4_826.4	826.4	3.4	1800	0.71	2040	12000	1.7	1800	0.35	2200	12000	
F 51 4_885.5	885.5	3.2	1800	0.66	2050	12000	1.6	1800	0.33	2200	12000	
F 51 4_979.4	979.4	2.9	1800	0.60	2060	12000	1.4	1800	0.30	2200	12000	
F 51 4_1070	1070	2.6	1800	0.55	2070	12000	1.3	1800	0.27	2200	12000	
F 51 4_1168	1168	2.4	1800	0.50	2080	12000	1.2	1800	0.25	2200	12000	
F 51 4_1296	1296	2.2	1800	0.45	2090	12000	1.1	1800	0.23	2200	12000	
F 51 4_1439	1439	1.9	1800	0.41	2100	12000	1.0	1800	0.20	2200	12000	

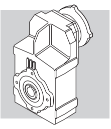

F 51 1800 Nm

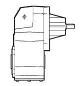	i	n_1 = 900 min^{-1}					n_1 = 500 min^{-1}					
		n_2 min^{-1}	M_{n2} Nm	P_{n1} kW	R_{n1} N	R_{n2} N	n_2 min^{-1}	M_{n2} Nm	P_{n1} kW	R_{n1} N	R_{n2} N	
F 51 2_7.2	7.2	125	1100	15.2	1940	6170	70	1100	8.4	3190	8140	445
F 51 2_9.1	9.1	99	1100	12.1	2450	6900	55	1100	6.7	3440	9030	
F 51 2_11.1	11.1	81	1520	13.6	2450	6660	45	1700	8.4	3190	8480	
F 51 2_14.0	14.0	64	1620	11.5	2550	7250	36	1700	6.7	3440	9500	
F 51 2_18.8	18.8	48	1700	9.0	2690	8230	26.6	1700	5.0	3500	10900	
F 51 2_23.8	23.8	38	1700	7.1	2870	9250	21.0	1700	3.9	3500	12000	
F 51 2_30.0	30.0	30	1700	5.6	2960	10300	16.6	1700	3.1	3500	12000	
F 51 2_37.1	37.1	24.2	1700	4.5	3040	11400	13.5	1700	2.5	3500	12000	
F 51 3_48.9	48.9	18.4	1800	3.7	3500	12000	10.2	1800	2.1	3500	12000	
F 51 3_65.8	65.8	13.7	1800	2.8	3500	12000	7.6	1800	1.5	3500	12000	
F 51 3_83.2	83.2	10.8	1800	2.2	3500	12000	6.0	1800	1.2	3500	12000	
F 51 3_105.1	105.1	8.6	1800	1.7	3500	12000	4.8	1800	0.96	3500	12000	
F 51 3_129.9	129.9	6.9	1800	1.4	3500	12000	3.8	1800	0.78	3500	12000	
F 51 3_165.6	165.6	5.4	1800	1.1	3500	12000	3.0	1800	0.61	3500	12000	
F 51 3_202.4	202.4	4.4	1800	0.90	3500	12000	2.5	1800	0.50	3500	12000	
F 51 3_216.9	216.9	4.2	1800	0.84	3500	12000	2.3	1800	0.47	3500	12000	
F 51 3_239.8	239.8	3.8	1800	0.76	3500	12000	2.1	1800	0.42	3500	12000	
F 51 3_262.1	262.1	3.4	1800	0.70	3500	12000	1.9	1800	0.39	3500	12000	
F 51 3_285.9	285.9	3.1	1800	0.64	3500	12000	1.7	1800	0.35	3500	12000	
F 51 3_317.3	317.3	2.8	1800	0.57	3500	12000	1.6	1800	0.32	3500	12000	
F 51 3_352.5	352.5	2.6	1800	0.52	3500	12000	1.4	1800	0.29	3500	12000	
F 51 4_429.1	429.1	2.1	1800	0.44	2200	12000	1.2	1800	0.24	2200	12000	
F 51 4_530.5	530.5	1.7	1800	0.36	2200	12000	0.94	1800	0.20	2200	12000	
F 51 4_676.3	676.3	1.3	1800	0.28	2200	12000	0.74	1800	0.15	2200	12000	
F 51 4_826.4	826.4	1.1	1800	0.23	2200	12000	0.61	1800	0.13	2200	12000	
F 51 4_885.5	885.5	1.0	1800	0.21	2200	12000	0.56	1800	0.12	2200	12000	
F 51 4_979.4	979.4	0.92	1800	0.19	2200	12000	0.51	1800	0.11	2200	12000	
F 51 4_1070	1070	0.84	1800	0.18	2200	12000	0.47	1800	0.10	2200	12000	
F 51 4_1168	1168	0.77	1800	0.16	2200	12000	0.43	1800	0.09	2200	12000	
F 51 4_1296	1296	0.69	1800	0.15	2200	12000	0.39	1800	0.08	2200	12000	
F 51 4_1439	1439	0.63	1800	0.13	2200	12000	0.35	1800	0.07	2200	12000	

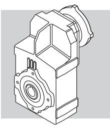

F 60 2900 Nm

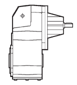	i	n_1 = 2800 min^{-1}					n_1 = 1400 min^{-1}					
		n_2 min^{-1}	M_{n2} Nm	P_{n1} kW	R_{n1} N	R_{n2} N	n_2 min^{-1}	M_{n2} Nm	P_{n1} kW	R_{n1} N	R_{n2} N	
F 60 3_9.0	9.0	311	920	32	—	13300	156	1160	20	—	16500	449
F 60 3_9.7	9.7	289	1000	33	—	13600	144	1250	20	—	16700	
F 60 3_11.8	11.8	237	1030	28	—	14600	119	1300	17.4	—	17800	
F 60 3_12.7	12.7	220	1110	28	—	14700	110	1400	17.4	—	18000	
F 60 3_14.5	14.5	193	1110	24	—	15500	97	1400	15.3	—	19000	
F 60 3_15.7	15.7	178	1200	24	—	15600	89	1500	15.1	—	19200	
F 60 3_19.1	19.1	147	1200	19.9	—	16800	73	1500	12.4	—	20000	
F 60 3_20.7	20.7	135	1300	19.9	—	17000	68	1640	12.5	—	20000	
F 60 3_23.5	23.5	119	1260	17.0	—	17900	60	1590	10.7	—	20000	
F 60 3_25.4	25.4	110	1370	17.1	—	18100	55	1720	10.7	—	20000	
F 60 3_29.6	29.6	95	2750	29	820	15900	47	2900	15.5	2630	20000	
F 60 3_32.1	32.1	87	2800	28	1290	16200	44	2900	14.3	3260	20000	
F 60 3_38.8	38.8	72	2900	24	1260	17500	36	2900	11.8	3480	20000	
F 60 3_42.1	42.1	67	2900	22	1820	17900	33	2900	10.9	3720	20000	
F 60 3_47.8	47.8	59	2900	19.2	1770	19100	29.3	2900	9.6	3730	20000	
F 60 3_51.8	51.8	54	2900	17.7	2290	19500	27.0	2900	8.9	3830	20000	
F 60 3_63.0	63.0	44	2900	14.6	2310	20000	22.2	2900	7.3	3850	20000	
F 60 3_68.3	68.3	41	2900	13.4	2790	20000	20.5	2900	6.7	3940	20000	
F 60 3_77.6	77.6	36	2900	11.8	2620	20000	18.0	2900	5.9	3920	20000	
F 60 3_84.0	84.0	33	2900	10.9	2960	20000	16.7	2900	5.5	4010	20000	
F 60 3_98.2	98.2	28.5	2900	9.3	2910	20000	14.3	2900	4.7	3980	20000	
F 60 3_106.4	106.4	26.3	2900	8.6	3020	20000	13.2	2900	4.3	4070	20000	
F 60 3_120.5	120.5	23.2	2900	7.6	2970	20000	11.6	2900	3.8	4030	20000	
F 60 3_130.5	130.5	21.5	2900	7.0	3060	20000	10.7	2900	3.5	4110	20000	
F 60 3_150.4	150.4	18.6	2900	6.1	3010	20000	9.3	2900	3.0	4060	20000	
F 60 3_162.9	162.9	17.2	2900	5.6	3090	20000	8.6	2900	2.8	4140	20000	
F 60 3_185.9	185.9	15.1	2900	4.9	3050	20000	7.5	2900	2.5	4100	20000	
F 60 3_201.4	201.4	13.9	2900	4.6	3130	20000	7.0	2900	2.3	4180	20000	
F 60 3_217.6	217.6	12.9	2900	4.2	3070	20000	6.4	2900	2.1	4120	20000	
F 60 3_235.8	235.8	11.9	2900	3.9	3140	20000	5.9	2900	1.9	4190	20000	
F 60 3_259.1	259.1	10.8	2900	3.5	3080	20000	5.4	2900	1.8	4130	20000	
F 60 3_280.7	280.7	10.0	2900	3.3	3150	20000	5.0	2900	1.6	4200	20000	
F 60 4_315.4	315.4	8.9	2900	3.0	3500	20000	4.4	2900	1.5	3500	20000	
F 60 4_341.7	341.7	8.2	2900	2.8	3500	20000	4.1	2900	1.4	3500	20000	
F 60 4_399.3	399.3	7.0	2900	2.4	3500	20000	3.5	2900	1.2	3500	20000	
F 60 4_432.6	432.6	6.5	2900	2.2	3500	20000	3.2	2900	1.1	3500	20000	
F 60 4_489.8	489.8	5.7	2900	1.9	3500	20000	2.9	2900	0.96	3500	20000	
F 60 4_530.7	530.7	5.3	2900	1.8	3500	20000	2.6	2900	0.89	3500	20000	
F 60 4_611.4	611.4	4.6	2900	1.5	3500	20000	2.3	2900	0.77	3500	20000	
F 60 4_662.4	662.4	4.2	2900	1.4	3500	20000	2.1	2900	0.71	3500	20000	
F 60 4_756.0	756.0	3.7	2900	1.2	3500	20000	1.9	2900	0.62	3500	20000	
F 60 4_819.0	819.0	3.4	2900	1.1	3500	20000	1.7	2900	0.57	3500	20000	
F 60 4_885.1	885.1	3.2	2900	1.1	3500	20000	1.6	2900	0.53	3500	20000	
F 60 4_958.9	958.9	2.9	2900	0.98	3500	20000	1.5	2900	0.49	3500	20000	
F 60 4_1054	1054	2.7	2900	0.89	3500	20000	1.3	2900	0.45	3500	20000	
F 60 4_1141	1141	2.5	2900	0.83	3500	20000	1.2	2900	0.41	3500	20000	

(—) Nehmen Sie bitte Kontakt mit unserem technischen Service auf und benennen die Querkraftsdaten (Drehrichtung, Orientierung, Anordnung)

F 60 2900 Nm

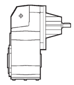	i	$n_1 = 900\ min^{-1}$					$n_1 = 500\ min^{-1}$					
		n_2	M_{n2}	P_{n1}	R_{n1}	R_{n2}	n_2	M_{n2}	P_{n1}	R_{n1}	R_{n2}	
		min^{-1}	Nm	kW	N	N	min^{-1}	Nm	kW	N	N	
F 60 3_9.0	9.0	100	1340	15.1	—	18800	56	1630	10.2	—	20000	449
F 60 3_9.7	9.7	93	1460	15.3	—	19000	52	1780	10.4	—	20000	
F 60 3_11.8	11.8	76	1500	12.9	—	20000	42	1830	8.8	—	20000	
F 60 3_12.7	12.7	71	1620	13.0	—	20000	39	1900	8.4	600	20000	
F 60 3_14.5	14.5	62	1620	11.4	—	20000	34	1900	7.4	490	20000	
F 60 3_15.7	15.7	57	1750	11.3	—	20000	32	1900	6.8	1630	20000	
F 60 3_19.1	19.1	47	1750	9.3	—	20000	26.2	1900	5.6	1660	20000	
F 60 3_20.7	20.7	43	1900	9.3	—	20000	24.2	1900	5.2	2700	20000	
F 60 3_23.5	23.5	38	1840	8.0	—	20000	21.3	1900	4.6	2340	20000	
F 60 3_25.4	25.4	35	1900	7.6	620	20000	19.7	1900	4.2	3330	20000	
F 60 3_29.6	29.6	30	2900	10.0	4220	20000	16.9	2900	5.5	4700	20000	
F 60 3_32.1	32.1	28.0	2900	9.2	4350	20000	15.6	2900	5.1	4700	20000	
F 60 3_38.8	38.8	23.2	2900	7.6	4420	20000	12.9	2900	4.2	4700	20000	
F 60 3_42.1	42.1	21.4	2900	7.0	4530	20000	11.9	2900	3.9	4700	20000	
F 60 3_47.8	47.8	18.8	2900	6.2	4530	20000	10.5	2900	3.4	4700	20000	
F 60 3_51.8	51.8	17.4	2900	5.7	4640	20000	9.7	2900	3.2	4700	20000	
F 60 3_63.0	63.0	14.3	2900	4.7	4660	20000	7.9	2900	2.6	4700	20000	
F 60 3_68.3	68.3	13.2	2900	4.3	4700	20000	7.3	2900	2.4	4700	20000	
F 60 3_77.6	77.6	11.6	2900	3.8	4700	20000	6.4	2900	2.1	4700	20000	
F 60 3_84.0	84.0	10.7	2900	3.5	4700	20000	6.0	2900	1.9	4700	20000	
F 60 3_98.2	98.2	9.2	2900	3.0	4700	20000	5.1	2900	1.7	4700	20000	
F 60 3_106.4	106.4	8.5	2900	2.8	4700	20000	4.7	2900	1.5	4700	20000	
F 60 3_120.5	120.5	7.5	2900	2.4	4700	20000	4.1	2900	1.4	4700	20000	
F 60 3_130.5	130.5	6.9	2900	2.3	4700	20000	3.8	2900	1.3	4700	20000	
F 60 3_150.4	150.4	6.0	2900	2.0	4700	20000	3.3	2900	1.1	4700	20000	
F 60 3_162.9	162.9	5.5	2900	1.8	4700	20000	3.1	2900	1.0	4700	20000	
F 60 3_185.9	185.9	4.8	2900	1.6	4700	20000	2.7	2900	0.88	4700	20000	
F 60 3_201.4	201.4	4.5	2900	1.5	4700	20000	2.5	2900	0.81	4700	20000	
F 60 3_217.6	217.6	4.1	2900	1.4	4700	20000	2.3	2900	0.75	4700	20000	
F 60 3_235.8	235.8	3.8	2900	1.3	4700	20000	2.1	2900	0.69	4700	20000	
F 60 3_259.1	259.1	3.5	2900	1.1	4700	20000	1.9	2900	0.63	4700	20000	
F 60 3_280.7	280.7	3.2	2900	1.1	4700	20000	1.8	2900	0.58	4700	20000	
F 60 4_315.4	315.4	2.9	2900	0.96	3500	20000	1.6	2900	0.53	3500	20000	
F 60 4_341.7	341.7	2.6	2900	0.89	3500	20000	1.5	2900	0.49	3500	20000	
F 60 4_399.3	399.3	2.3	2900	0.76	3500	20000	1.3	2900	0.42	3500	20000	
F 60 4_432.6	432.6	2.1	2900	0.70	3500	20000	1.2	2900	0.39	3500	20000	
F 60 4_489.8	489.8	1.8	2900	0.62	3500	20000	1.0	2900	0.34	3500	20000	
F 60 4_530.7	530.7	1.7	2900	0.57	3500	20000	0.94	2900	0.32	3500	20000	
F 60 4_611.4	611.4	1.5	2900	0.50	3500	20000	0.82	2900	0.28	3500	20000	
F 60 4_662.4	662.4	1.4	2900	0.46	3500	20000	0.75	2900	0.25	3500	20000	
F 60 4_756.0	756.0	1.2	2900	0.40	3500	20000	0.66	2900	0.22	3500	20000	
F 60 4_819.0	819.0	1.1	2900	0.37	3500	20000	0.61	2900	0.21	3500	20000	
F 60 4_885.1	885.1	1.0	2900	0.34	3500	20000	0.56	2900	0.19	3500	20000	
F 60 4_958.9	958.9	0.94	2900	0.32	3500	20000	0.52	2900	0.18	3500	20000	
F 60 4_1054	1054	0.85	2900	0.29	3500	20000	0.47	2900	0.16	3500	20000	
F 60 4_1141	1141	0.79	2900	0.27	3500	20000	0.44	2900	0.15	3500	20000	

(—) Nehmen Sie bitte Kontakt mit unserem technischen Service auf und benennen die Querkraftsdaten (Drehrichtung, Orientierung, Anordnung)

F 70 5000 Nm

	i	n1 = 2800 min-1					n1 = 1400 min-1					
		n_2 min-1	M_{n2} Nm	P_{n1} kW	R_{n1} N	R_{n2} N	n_2 min-1	M_{n2} Nm	P_{n1} kW	R_{n1} N	R_{n2} N	
F 70 3_10.0	10.0	280	2600	82	1410	14800	140	3200	51	1750	18200	453
F 70 3_10.9	10.9	257	2800	81	1510	14700	128	3450	50	1840	18100	
F 70 3_12.8	12.8	219	2900	72	860	15700	109	3600	44	880	19300	
F 70 3_13.9	13.9	201	3150	72	810	15600	101	3900	44	880	19100	
F 70 3_16.3	16.3	172	3250	63	570	16600	86	4000	39	710	20500	
F 70 3_17.7	17.7	158	3550	63	430	16400	79	4350	39	630	20200	
F 70 3_20.9	20.9	134	3450	52	690	18000	67	4000	30	2090	22700	
F 70 3_22.6	22.6	124	3750	52	640	17800	62	4350	30	2010	22500	
F 70 3_24.6	24.6	114	3550	46	560	19000	57	4000	26	2510	24200	
F 70 3_27.7	27.7	101	3750	43	5070	19600	51	4650	27	6410	24100	
F 70 3_30.0	30.0	93	4050	43	5080	19400	47	5000	26	6420	23900	
F 70 3_35.4	35.4	79	4150	37	5070	20900	40	5000	22	6440	25900	
F 70 3_38.4	38.4	73	4500	37	5060	20700	36	5000	21	6540	26500	
F 70 3_45.2	45.2	62	4600	32	5080	22200	31	5000	17.5	6590	28700	
F 70 3_49.0	49.0	57	4600	30	5170	22700	28.6	5000	16.1	6680	29300	
F 70 3_57.7	57.7	49	5000	27	5090	23800	24.3	5000	13.7	6680	31600	
F 70 3_62.5	62.5	45	5000	25	5170	24300	22.4	5000	12.7	6760	32300	
F 70 3_67.9	67.9	41	5000	23	5110	25500	20.6	5000	11.6	6710	33600	
F 70 3_73.6	73.6	38	5000	21	5190	26100	19.0	5000	10.7	6790	34400	
F 70 3_85.4	85.4	33	5000	18.5	5190	28000	16.4	5000	9.3	6780	35000	
F 70 3_92.5	92.5	30	5000	17.1	5260	28700	15.1	5000	8.5	6860	35000	
F 70 3_101.2	101.2	27.7	5000	15.6	5220	30000	13.8	5000	7.8	6820	35000	
F 70 3_109.6	109.6	25.5	5000	14.4	5290	30700	12.8	5000	7.2	6890	35000	
F 70 3_122.7	122.7	22.8	5000	12.9	5250	32300	11.4	5000	6.4	6850	35000	
F 70 3_133.0	133.0	21.1	5000	11.9	5320	33100	10.5	5000	5.9	6920	35000	
F 70 3_153.8	153.8	18.2	5000	10.3	5280	35000	9.1	5000	5.1	6880	35000	
F 70 3_166.7	166.7	16.8	5000	9.5	5350	35000	8.4	5000	4.7	6950	35000	
F 70 3_180.9	180.9	15.5	5000	8.7	5310	35000	7.7	5000	4.4	6910	35000	
F 70 3_196.0	196.0	14.3	5000	8.1	5370	35000	7.1	5000	4.0	6970	35000	
F 70 4_216.5	216.5	12.9	5000	7.5	2130	35000	6.5	5000	3.7	2860	35000	
F 70 4_234.6	234.6	11.9	5000	6.9	2130	35000	6.0	5000	3.5	2860	35000	
F 70 4_280.9	280.9	10.0	5000	5.8	2200	35000	5.0	5000	2.9	2940	35000	
F 70 4_304.3	304.3	9.2	5000	5.3	2200	35000	4.6	5000	2.7	2940	35000	
F 70 4_372.5	372.5	7.5	5000	4.4	2260	35000	3.8	5000	2.2	3000	35000	
F 70 4_403.5	403.5	6.9	5000	4.0	2260	35000	3.5	5000	2.0	3000	35000	
F 70 4_471.2	471.2	5.9	5000	3.4	2300	35000	3.0	5000	1.7	3040	35000	
F 70 4_510.4	510.4	5.5	5000	3.2	2300	35000	2.7	5000	1.6	3040	35000	
F 70 4_606.8	606.8	4.6	5000	2.7	2340	35000	2.3	5000	1.3	3070	35000	
F 70 4_657.4	657.4	4.3	5000	2.5	2340	35000	2.1	5000	1.2	3070	35000	
F 70 4_759.0	759.0	3.7	5000	2.1	2360	35000	1.8	5000	1.1	3090	35000	
F 70 4_822.2	822.2	3.4	5000	2.0	2360	35000	1.7	5000	1.0	3090	35000	
F 70 4_899.4	899.4	3.1	5000	1.8	2370	35000	1.6	5000	0.90	3110	35000	
F 70 4_974.4	974.4	2.9	5000	1.7	2370	35000	1.4	5000	0.83	3110	35000	
F 70 4_1091	1091	2.6	5000	1.5	2390	35000	1.3	5000	0.74	3120	35000	
F 70 4_1182	1182	2.4	5000	1.4	2390	35000	1.2	5000	0.69	3120	35000	
F 70 4_1368	1368	2.0	5000	1.2	2400	35000	1.0	5000	0.59	3130	35000	
F 70 4_1481	1481	1.9	5000	1.1	2400	35000	0.95	5000	0.55	3130	35000	
F 70 4_1585	1585	1.8	5000	1.0	2410	35000	0.88	5000	0.51	3140	35000	
F 70 4_1717	1717	1.6	5000	0.95	2410	35000	0.82	5000	0.47	3140	35000	
F 70 4_2019	2019	1.4	5000	0.80	2420	35000	0.69	5000	0.40	3150	35000	
F 70 4_2188	2188	1.3	5000	0.74	2420	35000	0.64	5000	0.37	3150	35000	

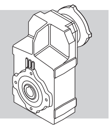

F 70 5000 Nm

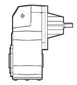	i	n_1 = 900 min^{-1}					n_1 = 500 min^{-1}					
		n_2	M_{n2}	P_{n1}	R_{n1}	R_{n2}	n_2	M_{n2}	P_{n1}	R_{n1}	R_{n2}	
		min^{-1}	Nm	kW	N	N	min^{-1}	Nm	kW	N	N	
F 70 3_10.0	10.0	90	3200	33	4870	21700	50	3200	18.1	7000	27000	453
F 70 3_10.9	10.9	83	3450	32	4970	21700	46	3450	17.9	7000	27200	
F 70 3_12.8	12.8	70	3850	31	2540	22500	39	3600	15.9	7000	28300	
F 70 3_13.9	13.9	65	4200	31	2380	22400	36	3900	15.8	7000	28300	
F 70 3_16.3	16.3	55	4000	25	3830	24500	31	4000	13.9	7000	30700	
F 70 3_17.7	17.7	51	4350	25	3750	24400	28.2	4350	13.9	7000	30800	
F 70 3_20.9	20.9	43	4000	19.5	5210	27000	23.9	4000	10.8	7000	33700	
F 70 3_22.6	22.6	40	4350	19.6	5130	26900	22.1	4350	10.9	7000	33800	
F 70 3_24.6	24.6	37	4000	16.5	5630	28700	20.3	4000	9.2	7000	35000	
F 70 3_27.7	27.7	32	5000	18.4	7000	28100	18.1	4650	9.5	7000	35000	
F 70 3_30.0	30.0	30	5000	16.9	7000	28800	16.7	5000	9.4	7000	35000	
F 70 3_35.4	35.4	25.4	5000	14.4	7000	31000	14.1	5000	8.0	7000	35000	
F 70 3_38.4	38.4	23.4	5000	13.2	7000	31700	13.0	5000	7.4	7000	35000	
F 70 3_45.2	45.2	19.9	5000	11.2	7000	34100	11.1	5000	6.2	7000	35000	
F 70 3_49.0	49.0	18.4	5000	10.4	7000	34900	10.2	5000	5.8	7000	35000	
F 70 3_57.7	57.7	15.6	5000	8.8	7000	35000	8.7	5000	4.9	7000	35000	
F 70 3_62.5	62.5	14.4	5000	8.1	7000	35000	8.0	5000	4.5	7000	35000	
F 70 3_67.9	67.9	13.3	5000	7.5	7000	35000	7.4	5000	4.2	7000	35000	
F 70 3_73.6	73.6	12.2	5000	6.9	7000	35000	6.8	5000	3.8	7000	35000	
F 70 3_85.4	85.4	10.5	5000	6.0	7000	35000	5.9	5000	3.3	7000	35000	
F 70 3_92.5	92.5	9.7	5000	5.5	7000	35000	5.4	5000	3.1	7000	35000	
F 70 3_101.2	101.2	8.9	5000	5.0	7000	35000	4.9	5000	2.8	7000	35000	
F 70 3_109.6	109.6	8.2	5000	4.6	7000	35000	4.6	5000	2.6	7000	35000	
F 70 3_122.7	122.7	7.3	5000	4.1	7000	35000	4.1	5000	2.3	7000	35000	
F 70 3_133.0	133.0	6.8	5000	3.8	7000	35000	3.8	5000	2.1	7000	35000	
F 70 3_153.8	153.8	5.9	5000	3.3	7000	35000	3.3	5000	1.8	7000	35000	
F 70 3_166.7	166.7	5.4	5000	3.0	7000	35000	3.0	5000	1.7	7000	35000	
F 70 3_180.9	180.9	5.0	5000	2.8	7000	35000	2.8	5000	1.6	7000	35000	
F 70 3_196.0	196.0	4.6	5000	2.6	7000	35000	2.6	5000	1.4	7000	35000	
F 70 4_216.5	216.5	4.2	5000	2.4	3430	35000	2.3	5000	1.3	3500	35000	
F 70 4_234.6	234.6	3.8	5000	2.2	3430	35000	2.1	5000	1.2	3500	35000	
F 70 4_280.9	280.9	3.2	5000	1.9	3500	35000	1.8	5000	1.0	3500	35000	
F 70 4_304.3	304.3	3.0	5000	1.7	3500	35000	1.6	5000	0.95	3500	35000	
F 70 4_372.5	372.5	2.4	5000	1.4	3500	35000	1.3	5000	0.78	3500	35000	
F 70 4_403.5	403.5	2.2	5000	1.3	3500	35000	1.2	5000	0.72	3500	35000	
F 70 4_471.2	471.2	1.9	5000	1.1	3500	35000	1.1	5000	0.62	3500	35000	
F 70 4_510.4	510.4	1.8	5000	1.0	3500	35000	0.98	5000	0.57	3500	35000	
F 70 4_606.8	606.8	1.5	5000	0.86	3500	35000	0.82	5000	0.48	3500	35000	
F 70 4_657.4	657.4	1.4	5000	0.79	3500	35000	0.76	5000	0.44	3500	35000	
F 70 4_759.0	759.0	1.2	5000	0.69	3500	35000	0.66	5000	0.38	3500	35000	
F 70 4_822.2	822.2	1.1	5000	0.63	3500	35000	0.61	5000	0.35	3500	35000	
F 70 4_899.4	899.4	1.0	5000	0.58	3500	35000	0.56	5000	0.32	3500	35000	
F 70 4_974.4	974.4	0.92	5000	0.54	3500	35000	0.51	5000	0.30	3500	35000	
F 70 4_1091	1091	0.82	5000	0.48	3500	35000	0.46	5000	0.27	3500	35000	
F 70 4_1182	1182	0.76	5000	0.44	3500	35000	0.42	5000	0.25	3500	35000	
F 70 4_1368	1368	0.66	5000	0.38	3500	35000	0.37	5000	0.21	3500	35000	
F 70 4_1481	1481	0.61	5000	0.35	3500	35000	0.34	5000	0.20	3500	35000	
F 70 4_1585	1585	0.57	5000	0.33	3500	35000	0.32	5000	0.18	3500	35000	
F 70 4_1717	1717	0.52	5000	0.30	3500	35000	0.29	5000	0.17	3500	35000	
F 70 4_2019	2019	0.45	5000	0.26	3500	35000	0.25	5000	0.14	3500	35000	
F 70 4_2188	2188	0.41	5000	0.24	3500	35000	0.23	5000	0.13	3500	35000	

F 80 8000 Nm

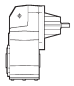	i	n_1 = 2800 min^{-1}					n_1 = 1400 min^{-1}					
		n_2	M_{n2}	P_{n1}	R_{n1}	R_{n2}	n_2	M_{n2}	P_{n1}	R_{n1}	R_{n2}	
		min^{-1}	Nm	kW	N	N	min^{-1}	Nm	kW	N	N	
F 80 3_10.3	10.3	272	3250	100	610	17200	136	4100	63	220	21800	456
F 80 3_11.2	11.2	250	3520	99	620	17800	125	4440	63	230	21700	
F 80 3_12.9	12.9	217	3560	87	670	18900	109	4480	55	350	23100	
F 80 3_14.0	14.0	200	3850	87	700	18800	100	4860	55	310	23000	
F 80 3_16.2	16.2	173	3760	73	760	20300	86	4740	46	430	24800	
F 80 3_17.6	17.6	159	4000	72	730	20300	80	5140	46	410	24700	
F 80 3_20.3	20.3	138	4060	63	780	21700	69	5120	40	440	26500	
F 80 3_22.0	22.0	127	4400	63	780	21600	64	5540	40	470	26400	
F 80 3_25.2	25.2	111	4230	53	700	23300	56	5330	33	360	28500	
F 80 3_28.8	28.8	97	6550	72	4590	20500	49	8000	44	5890	25400	
F 80 3_31.3	31.3	89	7100	72	4590	20000	45	8000	40	6040	26000	
F 80 3_36.0	36.0	78	7250	64	4560	21500	39	8000	35	6110	28100	
F 80 3_39.0	39.0	72	6700	54	4890	23000	36	8000	32	6240	28800	
F 80 3_45.3	45.3	62	7900	55	4440	22700	31	8000	28	6240	31100	
F 80 3_49.1	49.1	57	8000	52	4750	23200	28.5	8000	26	6360	31900	
F 80 3_56.7	56.7	49	8000	45	4780	25200	24.7	8000	22	6390	34300	
F 80 3_61.5	61.5	46	8000	41	4890	25800	22.8	8000	21	6500	35100	
F 80 3_70.4	70.4	40	8000	36	4850	27800	19.9	8000	18.0	6460	37500	
F 80 3_76.3	76.3	37	8000	33	4950	28500	18.3	8000	16.6	6560	38400	
F 80 3_85.2	85.2	33	8000	30	4940	30300	16.4	8000	14.8	6550	40500	
F 80 3_92.3	92.3	30	8000	27	5040	31000	15.2	8000	13.7	6640	41500	
F 80 3_105.0	105.0	26.7	8000	24	5000	33200	13.3	8000	12.0	6610	44000	
F 80 3_113.8	113.8	24.6	8000	22	5090	34000	12.3	8000	11.1	6700	45000	
F 80 3_122.5	122.5	22.9	8000	21	5020	35400	11.4	8000	10.3	6630	45000	
F 80 3_132.7	132.7	21.1	8000	19.1	5110	36200	10.6	8000	9.5	6720	45000	
F 80 3_147.9	147.9	18.9	8000	17.1	5060	38200	9.5	8000	8.6	6660	45000	
F 80 3_160.2	160.2	17.5	8000	15.8	5140	39100	8.7	8000	7.9	6750	45000	
F 80 3_184.6	184.6	15.2	8000	13.7	5090	41800	7.6	8000	6.9	6700	45000	
F 80 3_200.0	200.0	14.0	8000	12.7	5180	42800	7.0	8000	6.3	6780	45000	
F 80 4_218.5	218.5	12.8	8000	11.9	1020	45000	6.4	8000	5.9	2400	45000	
F 80 4_273.9	273.9	10.2	8000	9.5	1470	45000	5.1	8000	4.7	2680	45000	
F 80 4_296.7	296.7	9.4	8000	8.8	1470	45000	4.7	8000	4.4	2680	45000	
F 80 4_353.7	353.7	7.9	8000	7.3	1850	45000	4.0	8000	3.7	2770	45000	
F 80 4_383.2	383.2	7.3	8000	6.8	1850	45000	3.7	8000	3.4	2770	45000	
F 80 4_451.5	451.5	6.2	8000	5.8	2040	45000	3.1	8000	2.9	2820	45000	
F 80 4_489.1	489.1	5.7	8000	5.3	2040	45000	2.9	8000	2.7	2820	45000	
F 80 4_563.9	563.9	5.0	8000	4.6	2130	45000	2.5	8000	2.3	2860	45000	
F 80 4_610.9	610.9	4.6	8000	4.3	2130	45000	2.3	8000	2.1	2860	45000	
F 80 4_714.9	714.9	3.9	8000	3.6	2160	45000	2.0	8000	1.8	2890	45000	
F 80 4_774.4	774.4	3.6	8000	3.4	2160	45000	1.8	8000	1.7	2890	45000	
F 80 4_897.3	897.3	3.1	8000	2.9	2200	45000	1.6	8000	1.4	2930	45000	
F 80 4_972.0	972.0	2.9	8000	2.7	2200	45000	1.4	8000	1.3	2930	45000	
F 80 4_1058	1058	2.6	8000	2.5	2210	45000	1.3	8000	1.2	2950	45000	
F 80 4_1146	1146	2.4	8000	2.3	2210	45000	1.2	8000	1.1	2950	45000	
F 80 4_1277	1277	2.2	8000	2.0	2230	45000	1.1	8000	1.0	2960	45000	
F 80 4_1384	1384	2.0	8000	1.9	2230	45000	1.0	8000	0.94	2960	45000	
F 80 4_1578	1578	1.8	8000	1.6	2240	45000	0.89	8000	0.82	2970	45000	
F 80 4_1709	1709	1.6	8000	1.5	2240	45000	0.82	8000	0.76	2970	45000	
F 80 4_1834	1834	1.5	8000	1.4	2250	45000	0.76	8000	0.71	2980	45000	
F 80 4_1987	1987	1.4	8000	1.3	2250	45000	0.70	8000	0.65	2980	45000	

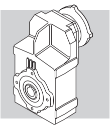

F 80 8000 Nm

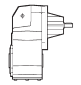	i	n_1 = 900 min^{-1}					n_1 = 500 min^{-1}					
		n_2 min^{-1}	M_{n2} Nm	P_{n1} kW	R_{n1} N	R_{n2} N	n_2 min^{-1}	M_{n2} Nm	P_{n1} kW	R_{n1} N	R_{n2} N	
F 80 3_10.3	10.3	87	4740	47	—	24700	49	5770	32	—	29300	456
F 80 3_11.2	11.2	80	5140	47	—	24600	45	6250	32	—	29200	
F 80 3_12.9	12.9	70	5200	41	—	26200	39	6320	28	—	31100	
F 80 3_14.0	14.0	64	5620	41	—	26100	36	6800	27	—	31000	
F 80 3_16.2	16.2	56	5490	34	—	28200	31	6250	22	1540	34200	
F 80 3_17.6	17.6	51	5960	34	—	28100	28.4	6800	22	1410	30000	
F 80 3_20.3	20.3	44	5930	30	—	30100	24.6	6250	17.4	3710	37300	
F 80 3_22.0	22.0	41	6420	30	—	30000	22.7	6800	17.5	3590	37200	
F 80 3_25.2	25.2	36	6175	25	—	32400	19.8	6250	14.0	4660	40500	
F 80 3_28.8	28.8	31	8000	28	7000	31000	17.4	8000	15.7	7000	39600	
F 80 3_31.3	31.3	28.8	8000	26	7000	31700	16.0	8000	14.4	7000	40600	
F 80 3_36.0	36.0	25.0	8000	23	7000	34100	13.9	8000	12.6	7000	43300	
F 80 3_39.0	39.0	23.1	8000	21	7000	34900	12.8	8000	11.6	7000	44300	
F 80 3_45.3	45.3	19.9	8000	18.0	7000	37500	11.0	8000	10.0	7000	45000	
F 80 3_49.1	49.1	18.3	8000	16.6	7000	38400	10.2	8000	9.2	7000	45000	
F 80 3_56.7	56.7	15.9	8000	14.3	7000	41100	8.8	8000	8.0	7000	45000	
F 80 3_61.5	61.5	14.6	8000	13.2	7000	42000	8.1	8000	7.3	7000	45000	
F 80 3_70.4	70.4	12.8	8000	11.6	7000	44700	7.1	8000	6.4	7000	45000	
F 80 3_76.3	76.3	11.8	8000	10.7	7000	45000	6.6	8000	5.9	7000	45000	
F 80 3_85.2	85.2	10.6	8000	9.5	7000	45000	5.9	8000	5.3	7000	45000	
F 80 3_92.3	92.3	9.8	8000	8.8	7000	45000	5.4	8000	4.9	7000	45000	
F 80 3_105.0	105.0	8.6	8000	7.7	7000	45000	4.8	8000	4.3	7000	45000	
F 80 3_113.8	113.8	7.9	8000	7.1	7000	45000	4.4	8000	4.0	7000	45000	
F 80 3_122.5	122.5	7.3	8000	6.6	7000	45000	4.1	8000	3.7	7000	45000	
F 80 3_132.7	132.7	6.8	8000	6.1	7000	45000	3.8	8000	3.4	7000	45000	
F 80 3_147.9	147.9	6.1	8000	5.5	7000	45000	3.4	8000	3.1	7000	45000	
F 80 3_160.2	160.2	5.6	8000	5.1	7000	45000	3.1	8000	2.8	7000	45000	
F 80 3_184.6	184.6	4.9	8000	4.4	7000	45000	2.7	8000	2.4	7000	45000	
F 80 3_200.0	200.0	4.5	8000	4.1	7000	45000	2.5	8000	2.3	7000	45000	
F 80 4_218.5	218.5	4.1	8000	3.8	3130	45000	2.3	8000	2.1	3500	45000	
F 80 4_273.9	273.9	3.3	8000	3.0	3240	45000	1.8	8000	1.7	3500	45000	
F 80 4_296.7	296.7	3.0	8000	2.8	3240	45000	1.7	8000	1.6	3500	45000	
F 80 4_353.7	353.7	2.5	8000	2.4	3330	45000	1.4	8000	1.3	3500	45000	
F 80 4_383.2	383.2	2.3	8000	2.2	3330	45000	1.3	8000	1.2	3500	45000	
F 80 4_451.5	451.5	2.0	8000	1.8	3380	45000	1.1	8000	1.0	3500	45000	
F 80 4_489.1	489.1	1.8	8000	1.7	3380	45000	1.0	8000	0.95	3500	45000	
F 80 4_563.9	563.9	1.6	8000	1.5	3420	45000	0.89	8000	0.82	3500	45000	
F 80 4_610.9	610.9	1.5	8000	1.4	3420	45000	0.82	8000	0.76	3500	45000	
F 80 4_714.9	714.9	1.3	8000	1.2	3460	45000	0.70	8000	0.65	3500	45000	
F 80 4_774.4	774.4	1.2	8000	1.1	3460	45000	0.65	8000	0.60	3500	45000	
F 80 4_897.3	897.3	1.0	8000	0.93	3490	45000	0.56	8000	0.52	3500	45000	
F 80 4_972.0	972.0	0.93	8000	0.86	3490	45000	0.51	8000	0.48	3500	45000	
F 80 4_1058	1058	0.85	8000	0.79	3500	45000	0.47	8000	0.44	3500	45000	
F 80 4_1146	1146	0.79	8000	0.73	3500	45000	0.44	8000	0.40	3500	45000	
F 80 4_1277	1277	0.70	8000	0.65	3500	45000	0.39	8000	0.36	3500	45000	
F 80 4_1384	1384	0.65	8000	0.60	3500	45000	0.36	8000	0.34	3500	45000	
F 80 4_1578	1578	0.57	8000	0.53	3500	45000	0.32	8000	0.29	3500	45000	
F 80 4_1709	1709	0.53	8000	0.49	3500	45000	0.29	8000	0.27	3500	45000	
F 80 4_1834	1834	0.49	8000	0.46	3500	45000	0.27	8000	0.25	3500	45000	
F 80 4_1987	1987	0.45	8000	0.42	3500	45000	0.25	8000	0.23	3500	45000	

(—) Nehmen Sie bitte Kontakt mit unserem technischen Service auf und benennen die Querkraftsdaten (Drehrichtung, Orientierung, Anordnung)

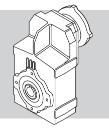

F 90 14000 Nm

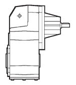	i	n_1 = 2800 min^{-1} n_2 min^{-1}	 M_{n2} Nm	 P_{n1} kW	 R_{n1} N	 R_{n2} N	n_1 = 1400 min^{-1} n_2 min^{-1}	 M_{n2} Nm	 P_{n1} kW	 R_{n1} N	 R_{n2} N	
F 90 3_10.3	10.3	272	6500	200	5480	23800	136	8000	123	8000	29300	459
F 90 3_11.1	11.1	252	7150	204	5280	23300	126	8800	125	7770	28700	
F 90 3_13.4	13.4	209	7550	178	4880	25000	104	9300	110	7280	30700	
F 90 3_14.5	14.5	193	8100	177	5000	24700	97	10000	109	7400	30300	
F 90 3_16.5	16.5	170	8400	161	4540	26000	85	10300	99	6960	32000	
F 90 3_17.9	17.9	156	8950	158	4560	25700	78	11000	97	7180	31700	
F 90 3_20.6	20.6	136	9200	141	3980	27400	68	11300	87	6260	33700	
F 90 3_22.3	22.3	126	9750	138	4280	27100	63	12000	85	6590	33400	
F 90 3_25.4	25.4	110	10050	125	3620	28700	55	12000	75	6310	36000	
F 90 3_28.6	28.6	98	9750	108	9800	30900	49	12000	66	12400	38000	
F 90 3_31.0	31.0	90	10550	108	9800	30300	45	13000	66	12400	37300	
F 90 3_37.4	37.4	75	10950	93	9820	32800	37	13500	57	12400	40400	
F 90 3_40.5	40.5	69	11900	93	9820	32100	35	14000	55	12500	40600	
F 90 3_46.1	46.1	61	12050	83	9840	34300	30	14000	48	12600	43600	
F 90 3_49.9	49.9	56	13050	83	9840	33500	28.1	14000	44	12700	44700	
F 90 3_57.3	57.3	49	13050	72	9810	36300	24.4	14000	39	12700	48100	
F 90 3_62.1	62.1	45	14000	71	9830	35600	22.5	14000	36	12800	49300	
F 90 3_70.8	70.8	40	14000	63	9830	38500	19.8	14000	31	12800	52700	
F 90 3_76.7	76.7	37	14000	58	9960	39500	18.3	14000	29	13000	54000	
F 90 3_88.4	88.4	32	14000	50	9930	42800	15.8	14000	25	12900	55000	
F 90 3_95.8	95.8	29.2	14000	46	10100	43800	14.6	14000	23	13100	55000	
F 90 3_103.3	103.3	27.1	14000	43	9960	45900	13.6	14000	21	13000	55000	
F 90 3_111.9	111.9	25.0	14000	40	10100	47100	12.5	14000	19.8	13100	55000	
F 90 3_126.8	126.8	22.1	14000	35	10000	50300	11.0	14000	17.5	13000	55000	
F 90 3_137.3	137.3	20.4	14000	32	10100	51500	10.2	14000	16.1	13100	55000	
F 90 3_150.3	150.3	18.6	14000	29	10100	54000	9.3	14000	14.7	13100	55000	
F 90 3_162.8	162.8	17.2	14000	27	10200	55000	8.6	14000	13.6	13200	55000	
F 90 3_179.2	179.2	15.6	14000	25	10200	55000	7.8	14000	12.4	13100	55000	
F 90 3_194.2	194.2	14.4	14000	23	10200	55000	7.2	14000	11.4	13200	55000	
F 90 4_213.6	213.6	13.1	14000	21	—	55000	6.6	14000	10.6	—	55000	
F 90 4_231.4	231.4	12.1	14000	19.6	—	55000	6.1	14000	9.8	—	55000	
F 90 4_268.7	268.7	10.4	14000	16.9	—	55000	5.2	14000	8.5	420	55000	
F 90 4_291.1	291.1	9.6	14000	15.6	—	55000	4.8	14000	7.8	420	55000	
F 90 4_361.8	361.8	7.7	14000	12.6	—	55000	3.9	14000	6.3	990	55000	
F 90 4_392.0	392.0	7.1	14000	11.6	—	55000	3.6	14000	5.8	990	55000	
F 90 4_457.5	457.5	6.1	14000	9.9	—	55000	3.1	14000	5.0	1390	55000	
F 90 4_495.6	495.6	5.6	14000	9.2	—	55000	2.8	14000	4.6	1390	55000	
F 90 4_577.5	577.5	4.8	14000	7.9	—	55000	2.4	14000	3.9	1600	55000	
F 90 4_625.6	625.6	4.5	14000	7.3	—	55000	2.2	14000	3.6	1600	55000	
F 90 4_714.0	714.0	3.9	14000	6.4	—	55000	2.0	14000	3.2	1800	55000	
F 90 4_773.4	773.4	3.6	14000	5.9	—	55000	1.8	14000	2.9	1800	55000	
F 90 4_910.2	910.2	3.1	14000	5.0	—	55000	1.5	14000	2.5	2020	55000	
F 90 4_986.0	986.0	2.8	14000	4.6	—	55000	1.4	14000	2.3	2020	55000	
F 90 4_1112	1112	2.5	14000	4.1	—	55000	1.3	14000	2.0	2110	55000	
F 90 4_1205	1205	2.3	14000	3.8	—	55000	1.2	14000	1.9	2110	55000	
F 90 4_1318	1318	2.1	14000	3.4	—	55000	1.1	14000	1.7	2220	55000	
F 90 4_1428	1428	2.0	14000	3.2	—	55000	0.98	14000	1.6	2220	55000	
F 90 4_1571	1571	1.8	14000	2.9	—	55000	0.89	14000	1.4	2260	55000	
F 90 4_1702	1702	1.6	14000	2.7	—	55000	0.82	14000	1.3	2260	55000	
F 90 4_1937	1937	1.4	14000	2.3	—	55000	0.72	14000	1.2	2300	55000	
F 90 4_2099	2099	1.3	14000	2.2	—	55000	0.67	14000	1.1	2300	55000	

(—) Nehmen Sie bitte Kontakt mit unserem technischen Service auf und benennen die Querkraftsdaten (Drehrichtung, Orientierung, Anordnung)

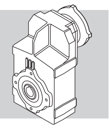

F 90 14000 Nm

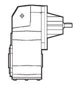	i	n_1 = 900 min^{-1}					n_1 = 500 min^{-1}					
		n_2	M_{n2}	P_{n1}	R_{n1}	R_{n2}	n_2	M_{n2}	P_{n1}	R_{n1}	R_{n2}	
		min^{-1}	Nm	kW	N	N	min^{-1}	Nm	kW	N	N	
F 90 3_10.3	10.3	87	9150	90	10000	33400	49	9600	53	15000	41900	459
F 90 3_11.1	11.1	81	10050	92	9780	32700	45	10400	53	15000	41600	
F 90 3_13.4	13.4	67	10600	80	9270	35100	37	12500	53	12700	42100	
F 90 3_14.5	14.5	62	11400	80	9390	34600	34	13550	53	12700	41400	
F 90 3_16.5	16.5	55	11750	72	8890	36600	30	12300	42	14600	46400	
F 90 3_17.9	17.9	50	12550	71	9140	36200	27.9	13150	41	14800	46200	
F 90 3_20.6	20.6	44	12200	60	9100	39700	24.3	12200	33	15000	51000	
F 90 3_22.3	22.3	40	13200	60	9120	39000	22.4	13200	33	15000	50700	
F 90 3_25.4	25.4	35	12000	48	10400	43800	19.7	12000	27	15000	55000	
F 90 3_28.6	28.6	31	13700	49	14400	43400	17.5	14000	28	15000	55000	
F 90 3_31.0	31.0	29.0	14000	46	14500	44000	16.1	14000	26	15000	55000	
F 90 3_37.4	37.4	24.1	14000	38	14700	48400	13.4	14000	21	15000	55000	
F 90 3_40.5	40.5	22.2	14000	35	14800	49600	12.3	14000	19.5	15000	55000	
F 90 3_46.1	46.1	19.5	14000	31	14900	53000	10.8	14000	17.2	15000	55000	
F 90 3_49.9	49.9	18.0	14000	29	15000	54200	10.0	14000	15.8	15000	55000	
F 90 3_57.3	57.3	15.7	14000	25	15000	55000	8.7	14000	13.8	15000	55000	
F 90 3_62.1	62.1	14.5	14000	23	15000	55000	8.1	14000	12.7	15000	55000	
F 90 3_70.8	70.8	12.7	14000	20	15000	55000	7.1	14000	11.2	15000	55000	
F 90 3_76.7	76.7	11.7	14000	18.6	15000	55000	6.5	14000	10.3	15000	55000	
F 90 3_88.4	88.4	10.2	14000	16.1	15000	55000	5.7	14000	8.9	15000	55000	
F 90 3_95.8	95.8	9.4	14000	14.9	15000	55000	5.2	14000	8.3	15000	55000	
F 90 3_103.3	103.3	8.7	14000	13.8	15000	55000	4.8	14000	7.7	15000	55000	
F 90 3_111.9	111.9	8.0	14000	12.7	15000	55000	4.5	14000	7.1	15000	55000	
F 90 3_126.8	126.8	7.1	14000	11.2	15000	55000	3.9	14000	6.2	15000	55000	
F 90 3_137.3	137.3	6.6	14000	10.4	15000	55000	3.6	14000	5.8	15000	55000	
F 90 3_150.3	150.3	6.0	14000	9.5	15000	55000	3.3	14000	5.3	15000	55000	
F 90 3_162.8	162.8	5.5	14000	8.7	15000	55000	3.1	14000	4.9	15000	55000	
F 90 3_179.2	179.2	5.0	14000	7.9	15000	55000	2.8	14000	4.4	15000	55000	
F 90 3_194.2	194.2	4.6	14000	7.3	15000	55000	2.6	14000	4.1	15000	55000	
F 90 4_213.6	213.6	4.2	14000	6.8	810	55000	2.3	14000	3.8	2350	55000	
F 90 4_231.4	231.4	3.9	14000	6.3	810	55000	2.2	14000	3.5	2350	55000	
F 90 4_268.7	268.7	3.3	14000	5.4	1390	55000	1.9	14000	3.0	2920	55000	
F 90 4_291.1	291.1	3.1	14000	5.0	1390	55000	1.7	14000	2.8	2920	55000	
F 90 4_361.8	361.8	2.5	14000	4.0	1960	55000	1.4	14000	2.2	3390	55000	
F 90 4_392.0	392.0	2.3	14000	3.7	1960	55000	1.3	14000	2.1	3390	55000	
F 90 4_457.5	457.5	2.0	14000	3.2	2360	55000	1.1	14000	1.8	3490	55000	
F 90 4_495.6	495.6	1.8	14000	2.9	2360	55000	1.0	14000	1.6	3490	55000	
F 90 4_577.5	577.5	1.6	14000	2.5	2570	55000	0.87	14000	1.4	3500	55000	
F 90 4_625.6	625.6	1.4	14000	2.3	2570	55000	0.80	14000	1.3	3500	55000	
F 90 4_714.0	714.0	1.3	14000	2.0	2770	55000	0.70	14000	1.1	3500	55000	
F 90 4_773.4	773.4	1.2	14000	1.9	2770	55000	0.65	14000	1.0	3500	55000	
F 90 4_910.2	910.2	0.99	14000	1.6	2840	55000	0.55	14000	0.89	3500	55000	
F 90 4_986.0	986.0	0.91	14000	1.5	2840	55000	0.51	14000	0.82	3500	55000	
F 90 4_1112	1112	0.81	14000	1.3	2860	55000	0.45	14000	0.73	3500	55000	
F 90 4_1205	1205	0.75	14000	1.2	2860	55000	0.41	14000	0.67	3500	55000	
F 90 4_1318	1318	0.68	14000	1.1	2890	55000	0.38	14000	0.62	3500	55000	
F 90 4_1428	1428	0.63	14000	1.0	2890	55000	0.35	14000	0.57	3500	55000	
F 90 4_1571	1571	0.57	14000	0.93	2900	55000	0.32	14000	0.52	3500	55000	
F 90 4_1702	1702	0.53	14000	0.86	2900	55000	0.29	14000	0.48	3500	55000	
F 90 4_1937	1937	0.46	14000	0.75	2910	55000	0.26	14000	0.42	3500	55000	
F 90 4_2099	2099	0.43	14000	0.70	2910	55000	0.24	14000	0.39	3500	55000	

61 ANBAUMÖGLICHKEITEN

In den folgenden Tabellen werden die von den Größen her gesehenen möglichen Passungen angegeben.

Die angemessene Getriebewahl muss unter Befolgung der im Paragraph 12 gegebenen Anleitungen und auf der Grundlage der Auswahltabelle der technischen Daten erfolgen.

(D 56)

		IEC_ 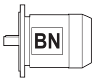 **(IM B5)**											
		BN										**IEC**	
P_{n1}(#) [kW]	**2p**	0.37	0.75	1.5	2.2	4	4	9.2	18.5	22	30	45	55
	4p	0.25	0.55	1.1	1.85	3	4	9.2	15	22	30	45	55
	6p	0.12	0.37	0.75	1.1	1.85	2.2	5.5	11	15	18.5	30	37
		P63	**P71**	**P80**	**P90**	**P100**	**P112**	**P132**	**P160**	**P180**	**P200**	**P225**	**P250**
F 10 2	i =	7.4_127.1		7.4_91.5		7.4_91.5							
F 20 2		8.7_132.2 ⊖ (14.8_18.1)		6.4_114.3		6.4_114.3							
F 20 3		156.3_545.3		156.3_545.3		156.3_545.3							
F 25 2		9.4_44.4 ⊖ (10.6_13.0)		6.9_44.4		6.9_44.4							
F 25 3		50.8_333.1		45.6_288.1		45.6_288.1							
F 25 4		393.9_1374		393.9_1374		393.9_1374							
F 31 2		18.5_44.6		6.9_44.6		6.9_44.6		6.9_37.7					
F 31 3		69.1_374.4		47.5_374.4		47.5_374.4		47.5_140.7					
F 31 4		418.9_1539		418.9_1539		418.9_1539							
F 41 2		24.1_47.9		6.7_47.9		6.7_47.9		6.7_47.9					
F 41 3		84.9_344.8		51.5_344.8		51.5_344.8		51.5_168.7					
F 41 4		433.7_1411		433.7_1411		433.7_1411							
F 51 2		30.0_37.1		7.2_37.1		7.2_37.1		7.2_37.1	7.2_37.1	7.2_37.1			
F 51 3		105.1_352.5		48.9_352.5		48.9_352.5		48.9_202.4	48.9_202.4	48.9_202.4			
F 51 4		429.1_1439		429.1_1439		429.1_1439							
F 60 3		98.2_280.7		11.8_280.7 ⊖ (29.6_32.1)		11.8_280.7 ⊖ (29.6_32.1)		9.0_201.4	9.0_201.4	9.0_201.4			
F 60 4		315.4_1141		315.4_1141		315.4_1141							
F 70 3				85.4_196.0		85.4_196.0		16.3_196.0 ⊖ (27.7_38.4)	10.0_196.0	10.0_196.0	10.0_49.0 ⊖ (20.9_24.6)		
F 70 4		372.5_2188		216.5_2188		216.5_2188		216.5_822.2					
F 80 3				105.0_200.0		105.0_200.0		20.3_200.0 ⊖ (28.8_49.1)	12.9_200.0 ⊖ (28.8_31.3)	10.3_200.0	10.3_132.7	10.3_132.7	
F 80 4		451.5_1987		218.5_1987		218.5_1987		218.5_972.0					
F 90 3				126.8_194.2		126.8_194.2		25.4_194.2 ⊖ (28.6_62.1)	20.6_194.2 ⊖ (28.6_49.9)	10.3_194.2	10.3_162.8	10.3_162.8	10.3_162.8
F 90 4		577.5_2099		213.6_2099		213.6_2099		213.6_1205	213.6_1205	213.6_1205			

(#) P_{n1} = max. installierbare Leistung für IEC Motoradapter P_

(D 57)

		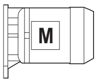					
		M05	**M1**	**M2**	**M3**	**M4**	**M5**
F 10 2	**i =**	7.4_127.1	7.4_71.1	7.4_91.5	7.4_91.5		
F 20 2		8.7_132.2 ⊖ (14.8_18.1)	8.7_90.4 ⊖ (14.8_18.1)	6.4_114.3	6.4_114.3		
F 20 3		156.3_545.3	156.3_545.3	156.3_545.3	156.3_545.3		
F 25 2		9.4_44.4 ⊖ (10.6_13.0)	9.4_44.4 ⊖ (10.6_13.0)	6.9_44.4	6.9_44.4		
F 25 3		50.8_333.1	50.8_227.8	45.6_288.1	45.6_288.1		
F 25 4		393.9_1374	393.9_1374	393.9_1374	393.9_1374		
F 31 2			18.5_44.6	6.9_44.6	6.9_44.6	6.9_37.7	
F 31 3			69.1_293.8	47.5_374.4	47.5_374.4	47.5_140.7	
F 31 4		418.9_1539	418.9_1539	418.9_1539	418.9_1539		
F 41 2			24.1_47.9	6.7_47.9	6.7_47.9	6.7_47.9	
F 41 3			84.9_344.8	51.5_344.8	51.5_344.8	51.5_168.7	
F 41 4		433.7_1411	433.7_1411	433.7_1411	433.7_1411		
F 51 2			30.0_37.1	7.2_37.1	7.2_37.1	7.2_37.1	7.2_37.1
F 51 3			105.1_352.5	48.9_352.5	48.9_352.5	48.9_202.4	48.9_202.4
F 51 4			429.1_1439	429.1_1439	429.1_1439		
F 60 3				11.8_280.7 ⊖ (29.6_32.1)	11.8_280.7 ⊖ (29.6_32.1)	9_201.4	9_201.4
F 60 4			315.4_1141	315.4_1141	315.4_1141		
F 70 3				85.4_196.0	85.4_196.0	16.3_196.0 ⊖ (27.7_38.4)	16.3_196.0 ⊖ (27.7_38.4)
F 70 4			372.5_2188	216.5_2188	216.5_2188	216.5_822.2	
F 80 3					105.0_200.0	20.3_200.0 ⊖ (28.8_49.1)	20.3_200.0 ⊖ (28.8_49.1)
F 80 4			451.5_1987	218.5_1987	218.5_1987	218.5_972.0	
F 90 3					126.8_194.2	25.4_194.2 ⊖ (28.6_62.1)	25.4_194.2 ⊖ (28.6_62.1)
F 90 4				213.6_2099	213.6_2099	213.6_1205	

Für viele Servomotoren der wichtigsten Hersteller stehen passende Motoradapter für die Baugrößen F 10 … F 60 zur Verfügung. Die Abmessungen der Servomotor-Eingänge entnehmen Sie bitte dem Zeichnungsteil der verschiedenen Baugrößen. Der Bezeichnungszusatz **SK** steht für Eingänge mit herkömmlicher Passfedernut. Der Zusatz **SC** bezieht sich stattdessen auf Eingänge mit Klemmvorrichtung.

(D 58)

		SERVO INPUT							
		SK60A	**SK60B**	**SK80A**	**SK80B**	**SK80C**	**SK95A**	**SK95B**	**SK95C**
		SC60A	**SC60B**	**SC80A**	**SC80B**	**SC80C**	**SC95A**	**SC95B**	**SC95C**
F 10 2	i =	7.4_127.1	7.4_71.1	7.4_71.1		7.4_91.5	7.4_71.1	7.4_91.5	7.4_91.5
F 20 2		8.7_132.2 ⊖ (14.8_18.1)	8.7_90.4 ⊖ (14.8_18.1)	8.7_90.4 ⊖ (14.8_18.1)		6.4_114.3	8.7_90.4 ⊖ (14.8_18.1)	6.4_114.3	6.4_114.3
F 20 3		156.3_545.3	156.3_545.3	156.3_545.3		156.3_545.3	156.3_545.3	156.3_545.3	156.3_545.3
F 25 2		9.4_44.4 ⊖ (10.6_13.0)	9.4_44.4 ⊖ (10.6_13.0)	9.4_44.4 ⊖ (10.6_13.0)		6.9_44.4	9.4_44.4 ⊖ (10.6_13.0)	6.9_44.4	6.9_44.4
F 25 3		45.6_333.1	45.6_227.8	45.6_227.8		45.6_288.1	45.6_227.8	45.6_288.1	45.6_288.1
F 25 4		393.9_1374	393.9_1374	393.9_1374		393.9_1374	393.9_1374	393.9_1374	393.9_1374
F 31 2		18.5_44.6	18.5_44.6	18.5_44.6		6.9_44.6	18.5_44.6	6.9_44.6	6.9_44.6
F 31 3		69.1_374.4	69.1_293.8	69.1_293.8		47.5_374.4	69.1_293.8	47.5_374.4	47.5_374.4
F 31 4		418.9_1539	418.9_1539	418.9_1539		418.9_1539	418.9_1539	418.9_1539	418.9_1539
F 41 2					24.1_47.9	6.7_47.9	24.1_47.9	6.7_47.9	6.7_47.9
F 41 3					84.9_344.8	51.5_344.8	84.9_344.8	51.5_344.8	51.5_344.8
F 41 4		433.7_1411	433.7_1411	433.7_1411		433.7_1411	433.7_1411	433.7_1411	433.7_1411
F 51 2					30.0_37.1	7.2_37.1	30.0_37.1	7.2_37.1	7.2_37.1
F 51 3					105.1_352.5	48.9_352.5	105.1_352.5	48.9_352.5	48.9_352.5
F 51 4						429.1_1439	429.1_1439	429.1_1439	429.1_1439
F 60 3						11.8_280.7 ⊖ (29.6_32.1)	106.4_280.7	11.8_280.7 ⊖ (29.6_32.1)	11.8_280.7 ⊖ (29.6_32.1)
F 60 4					315.4_1141	315.4_1141	315.4_1141	315.4_1141	315.4_1141

(D 59)

		SERVO INPUT					
		SK110A	**SK110B**	**SK130A**	**SK130B**	**SK180A**	**SK180B**
		SC110A	**SC110B**	**SC130A**	**SC130B**	**SC180A**	**SC180B**
F 10 2	i =	7.4_91.5	7.4_91.5				
F 20 2		6.4_114.3	6.4_114.3				
F 20 3		156.3_545.3	156.3_545.3				
F 25 2		6.9_44.4	6.9_44.4				
F 25 3		45.6_288.1	45.6_288.1				
F 25 4		393.9_1374	393.9_1374				
F 31 2		6.9_44.6	6.9_44.6	6.9_44.6			
F 31 3		47.5_374.4	47.5_374.4	47.5_374.4			
F 31 4		418.9_1539	418.9_1539				
F 41 2		6.7_47.9	6.7_47.9	6.7_47.9	6.7_47.9	6.7_47.9	6.7_47.9
F 41 3		51.5_344.8	51.5_344.8	51.5_344.8	51.5_168.7	51.5_168.7	51.5_168.7
F 41 4		433.7_1411	433.7_1411				
F 51 2		7.2_37.1	7.2_37.1	7.2_37.1	7.2_37.1	7.2_37.1	7.2_37.1
F 51 3		48.9_352.5	48.9_352.5	48.9_352.5	48.9_202.4	48.9_202.4	48.9_202.4
F 51 4		429.1_1439	429.1_1439	429.1_1439			
F 60 3		11.8_280.7 ⊖ (29.6_32.1)	11.8_280.7 ⊖ (29.6_32.1)	11.8_280.7 ⊖ (29.6_32.1)	9.0_201.4	9.0_201.4	9.0_201.4
F 60 4		315.4_1141	315.4_1141	315.4_1141			

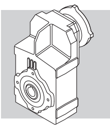

62 TRÄGHEITSMOMENT

Die In den folgenden Tabellen angegebenen Trägheitsmomente Jr [kgm^2] beziehen sich auf die Getriebeantriebsachse. Um das Lesen der Tabellen zu erleichtern, werden folgende Symbole ver-wendet:

Daten beziehen sich auf Kompaktgetriebe ohne Motor. Um das Gesamtträgheitsmoment des Getriebemotors zu ermitteln, muss nur das Trägheitsmoment des Getriebes mit dem Trägheitsmoment des entsprechenden Motors addiert werden (Wert Elektromotorenauswahltabellen entnehmen).

IEC Nur Getriebe vorbereitet für IEC-Motor (IEC-Größe...).

Dieses Symbol bezieht sich auf Getriebewerte.

SERVO Nur Getriebe vorbereitet für Servomotor.

F 10

	i	J (•10^{-4}) [kgm^2]							
			IEC						
			63	71	80	90	100	112	
F 10 2_7.4	7.4	1.0	1.8	1.8	3.8	3.7	4.9	4.9	1.7
F 10 2_8.6	8.6	0.77	1.5	1.5	3.6	3.5	4.7	4.7	1.5
F 10 2_9.8	9.8	0.64	1.4	1.4	3.4	3.3	4.5	4.5	1.3
F 10 2_11.5	11.5	0.48	1.2	1.2	3.3	3.2	4.4	4.4	1.2
F 10 2_13.0	13.0	0.38	1.1	1.1	3.2	3.1	4.3	4.3	1.1
F 10 2_14.6	14.6	0.61	1.4	1.4	3.4	3.3	4.5	4.5	1.3
F 10 2_17.0	17.0	0.48	1.3	1.2	3.3	3.2	4.4	4.4	1.2
F 10 2_19.3	19.3	0.41	1.2	1.2	3.2	3.1	4.3	4.3	1.1
F 10 2_22.8	22.8	0.32	1.1	1.1	3.1	3.0	4.2	4.2	1.0
F 10 2_25.8	25.8	0.25	1.0	1.0	3.1	2.9	4.1	4.1	0.93
F 10 2_29.6	29.6	0.19	1.0	0.95	3.0	2.9	4.1	4.1	0.87
F 10 2_33.0	33.0	0.16	0.93	0.92	3.0	2.8	4.1	4.1	0.84
F 10 2_35.3	35.3	0.14	0.92	0.90	3.0	2.8	4.0	4.0	0.83
F 10 2_39.6	39.6	0.12	0.90	0.88	2.9	2.8	4.0	4.0	0.80
F 10 2_44.7	44.7	0.10	0.88	0.86	2.9	2.8	4.0	4.0	0.79
F 10 2_48.7	48.7	0.09	0.86	0.85	2.9	2.8	4.0	4.0	0.77
F 10 2_56.7	56.7	0.07	0.84	0.83	2.9	2.7	4.0	4.0	0.75
F 10 2_63.0	63.0	0.06	0.83	0.82	2.9	2.7	3.9	3.9	0.74
F 10 2_71.1	71.1	0.05	0.82	0.81	2.8	2.7	3.9	3.9	0.73
F 10 2_81.3	81.3	0.04	0.78	0.77	2.8	2.7	3.9	3.9	0.67
F 10 2_91.5	91.5	0.03	0.78	0.76	2.8	2.7	3.9	3.9	0.66
F 10 2_106.0	106.0	0.03	0.77	0.76	—	—	—	—	0.66
F 10 2_127.1	127.1	0.02	0.76	0.75	—	—	—	—	0.65

F 10

		J (•10^{-4}) [kgm^2]									
		SERVO									
	i	**60A**		**60B 80A**		**95A**		**80C 95B 110A**		**95C 110B**	
		SK	**SC**	**SK**	**SC**	**SK**	**SC**	**SK**	**SC**	**SK**	**SC**
F 10 2_7.4	7.4	1.3	1.5	1.3	1.7	3.8	4.3	3.8	4.3	3.7	4.7
F 10 2_8.6	8.6	1.0	1.3	1.1	1.5	3.6	4.0	3.6	4.1	3.5	4.5
F 10 2_9.8	9.8	0.91	1.2	0.93	1.4	3.5	3.9	3.4	3.9	3.3	4.3
F 10 2_11.5	11.5	0.75	1.0	0.77	1.2	3.3	3.7	3.3	3.8	3.2	4.2
F 10 2_13.0	13.0	0.65	0.91	0.67	1.1	3.2	3.6	3.2	3.7	3.1	4.1
F 10 2_14.6	14.6	0.88	1.1	0.91	1.3	3.4	3.9	3.4	3.9	3.3	4.3
F 10 2_17.0	17.0	0.75	1.0	0.77	1.2	3.3	3.7	3.3	3.8	3.2	4.2
F 10 2_19.3	19.3	0.68	0.94	0.70	1.1	3.2	3.7	3.2	3.7	3.1	4.1
F 10 2_22.8	22.8	0.59	0.85	0.61	1.0	3.1	3.6	3.1	3.6	3.0	4.0
F 10 2_25.8	25.8	0.52	0.78	0.54	0.98	3.1	3.5	3.1	3.6	2.9	3.9
F 10 2_29.6	29.6	0.46	0.72	0.48	0.92	3.0	3.4	3.0	3.5	2.9	3.9
F 10 2_33.0	33.0	0.43	0.69	0.45	0.89	3.0	3.4	3.0	3.5	2.8	3.8
F 10 2_35.3	35.3	0.41	0.67	0.43	0.87	3.0	3.4	3.0	3.5	2.8	3.8
F 10 2_39.6	39.6	0.39	0.65	0.41	0.85	2.9	3.3	2.9	3.4	2.8	3.8
F 10 2_44.7	44.7	0.37	0.63	0.39	0.83	2.9	3.4	2.9	3.4	2.8	3.8
F 10 2_48.7	48.7	0.36	0.62	0.38	0.82	2.9	3.3	2.9	3.4	2.8	3.8
F 10 2_56.7	56.7	0.34	0.60	0.36	0.80	2.9	3.3	2.9	3.4	2.7	3.7
F 10 2_63.0	63.0	0.33	0.59	0.35	0.79	2.9	3.3	2.9	3.4	2.7	3.7
F 10 2_71.1	71.1	0.32	0.58	0.34	0.78	2.9	3.3	2.8	3.3	2.7	3.7
F 10 2_81.3	81.3	0.31	0.57	—	—	—	—	2.8	3.3	2.7	3.7
F 10 2_91.5	91.5	0.30	0.56	—	—	—	—	2.8	3.3	2.7	3.7
F 10 2_106.0	106.0	0.30	0.56	—	—	—	—	—	—	—	—
F 10 2_127.1	127.1	0.29	0.55	—	—	—	—	—	—	—	—

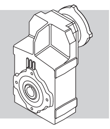

F 20

	i	**J** ($\cdot 10^{-4}$) [kgm^2]							
		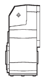	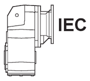						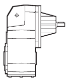
			63	**71**	**80**	**90**	**100**	**112**	
F 20 2_6.4	6.4	2.2	—	—	5.0	4.8	6.0	6.0	3.9
F 20 2_7.8	7.8	1.5	—	—	4.3	4.2	5.4	5.4	3.3
F 20 2_8.7	8.7	1.3	2.0	2.0	4.1	3.9	5.2	5.2	3.0
F 20 2_10.0	10.0	1.0	1.8	1.7	3.8	3.7	4.9	4.9	2.7
F 20 2_11.2	11.2	0.88	1.6	1.6	3.6	3.5	4.7	4.7	2.6
F 20 2_14.8	14.8	1.2	—	—	4.0	3.9	5.1	5.1	2.9
F 20 2_18.1	18.1	0.90	—	—	3.7	3.5	4.7	4.7	2.6
F 20 2_20.2	20.2	0.78	1.5	1.5	3.5	3.4	4.6	4.6	2.5
F 20 2_23.1	23.1	0.64	1.4	1.3	3.4	3.3	4.5	4.5	2.4
F 20 2_25.9	25.9	0.57	1.3	1.3	3.3	3.2	4.4	4.4	2.3
F 20 2_30.4	30.4	0.41	1.1	1.1	3.2	3.0	4.3	4.3	2.1
F 20 2_33.1	33.1	0.36	1.1	1.1	3.1	3.0	4.2	4.2	2.1
F 20 2_37.9	37.9	0.30	1.0	1.0	3.1	2.9	4.1	4.1	2.0
F 20 2_41.8	41.8	0.27	1.0	1.0	3.0	2.9	4.1	4.1	2.0
F 20 2_44.8	44.8	0.24	1.0	1.0	3.0	2.9	4.1	4.1	2.0
F 20 2_50.7	50.7	0.21	0.93	0.92	3.0	2.8	4.1	4.1	1.9
F 20 2_56.7	56.7	0.18	0.91	0.90	2.9	2.8	4.0	4.0	1.9
F 20 2_61.9	61.9	0.16	0.89	0.88	2.9	2.8	4.0	4.0	1.9
F 20 2_69.1	69.1	0.14	0.87	0.86	2.9	2.8	4.0	4.0	1.8
F 20 2_76.8	76.8	0.12	0.86	0.85	2.9	2.8	4.0	4.0	1.8
F 20 2_90.4	90.4	0.10	0.84	0.82	2.9	2.7	3.9	3.9	1.8
F 20 2_101.6	101.6	0.09	0.80	0.79	2.8	2.7	3.9	3.9	1.8
F 20 2_114.3	114.3	0.08	0.79	0.77	2.8	2.7	3.9	3.9	1.8
F 20 2_132.2	132.2	0.03	0.78	0.77	—	—	—	—	1.8
F 20 3_156.3	156.3	0.04	0.81	0.80	2.8	2.7	3.9	3.9	0.72
F 20 3_172.6	172.6	0.04	0.81	0.80	2.8	2.7	3.9	3.9	0.72
F 20 3_184.9	184.9	0.04	0.81	0.80	2.8	2.7	3.9	3.9	0.72
F 20 3_209.3	209.3	0.03	0.81	0.79	2.8	2.7	3.9	3.9	0.72
F 20 3_234.0	234.0	0.03	0.81	0.79	2.8	2.7	3.9	3.9	0.71
F 20 3_255.3	255.3	0.03	0.80	0.79	2.8	2.7	3.9	3.9	0.71
F 20 3_285.2	285.2	0.03	0.80	0.79	2.8	2.7	3.9	3.9	0.71
F 20 3_316.9	316.9	0.03	0.80	0.79	2.8	2.7	3.9	3.9	0.71
F 20 3_372.9	372.9	0.03	0.80	0.79	2.8	2.7	3.9	3.9	0.71
F 20 3_419.3	419.3	0.03	0.80	0.79	2.8	2.7	3.9	3.9	0.66
F 20 3_471.7	471.7	0.03	0.80	0.79	2.8	2.7	3.9	3.9	0.66
F 20 3_545.3	545.3	0.03	0.80	0.79	2.8	2.7	3.9	3.9	0.66

F 20

		J (•10^{-4}) [kgm^2]									
		SERVO									
	i	60A		60B 80A		95A		80C 95B 110A		95C 110B	
		SK	SC	SK	SC	SK	SC	SK	SC	SK	SC
F 20 2_6.4	6.4	—	—	—	—	—	—	5.0	5.5	4.8	5.8
F 20 2_7.8	7.8	—	—	—	—	—	—	4.3	4.8	4.2	5.2
F 20 2_8.7	8.7	1.6	1.8	1.6	2.0	4.1	4.6	4.1	4.6	3.9	4.9
F 20 2_10.0	10.0	1.3	1.5	1.3	1.7	3.8	4.3	3.8	4.3	3.7	4.7
F 20 2_11.2	11.2	1.2	1.4	1.2	1.6	3.7	4.1	3.6	4.1	3.5	4.5
F 20 2_14.8	14.8	—	—	—	—	—	—	4.0	4.5	3.9	4.9
F 20 2_18.1	18.1	—	—	—	—	—	—	3.7	4.2	3.5	4.5
F 20 2_20.2	20.2	1.1	1.3	1.1	1.5	3.6	4.0	3.5	4.0	3.4	4.4
F 20 2_23.1	23.1	0.91	1.2	0.93	1.4	3.5	3.9	3.4	3.9	3.3	4.3
F 20 2_25.9	25.9	0.84	1.1	0.86	1.3	3.4	3.8	3.3	3.8	3.2	4.2
F 20 2_30.4	30.4	0.68	0.94	0.70	1.1	3.2	3.7	3.2	3.7	3.0	4.0
F 20 2_33.1	33.1	0.63	0.89	0.65	1.1	3.2	3.6	3.1	3.6	3.0	4.0
F 20 2_37.9	37.9	0.47	0.83	0.59	1.0	3.1	3.6	3.1	3.6	2.9	3.9
F 20 2_41.8	41.8	0.44	0.80	0.56	1.0	3.1	3.5	3.0	3.5	2.9	3.9
F 20 2_44.8	44.8	0.41	0.77	0.53	0.97	3.1	3.5	3.0	3.5	2.9	3.9
F 20 2_50.7	50.7	0.48	0.74	0.50	0.94	3.0	3.5	3.0	3.5	2.8	3.8
F 20 2_56.7	56.7	0.45	0.71	0.47	0.91	3.0	3.4	2.9	3.4	2.8	3.8
F 20 2_61.9	61.9	0.43	0.69	0.45	0.89	3.0	3.4	2.9	3.4	2.8	3.8
F 20 2_69.1	69.1	0.41	0.67	0.43	0.87	3.0	3.4	2.9	3.4	2.8	3.8
F 20 2_76.8	76.8	0.39	0.65	0.41	0.85	2.9	3.4	2.9	3.4	2.8	3.8
F 20 2_90.4	90.4	0.37	0.63	0.39	0.83	2.9	3.4	2.9	3.4	2.7	3.7
F 20 2_101.6	101.6	0.36	0.62	—	—	—	—	2.8	3.3	2.7	3.7
F 20 2_114.3	114.3	0.35	0.61	—	—	—	—	2.8	3.3	2.7	3.7
F 20 2_132.2	132.2	0.30	0.56	—	—	—	—	—	—	—	—
F 20 3_156.3	156.3	0.31	0.57	0.33	0.77	2.9	3.3	2.8	3.3	2.7	3.7
F 20 3_172.6	172.6	0.31	0.57	0.33	0.77	2.9	3.3	2.8	3.3	2.7	3.7
F 20 3_184.9	184.9	0.31	0.57	0.33	0.77	2.9	3.3	2.8	3.3	2.7	3.7
F 20 3_209.3	209.3	0.30	0.56	0.32	0.76	2.9	3.3	2.8	3.3	2.7	3.7
F 20 3_234.0	234.0	0.30	0.56	0.32	0.76	2.9	3.3	2.8	3.3	2.7	3.7
F 20 3_255.3	255.3	0.30	0.56	0.32	0.76	2.9	3.3	2.8	3.3	2.7	3.7
F 20 3_285.2	285.2	0.30	0.56	0.32	0.76	2.9	3.3	2.8	3.3	2.7	3.7
F 20 3_316.9	316.9	0.30	0.56	0.32	0.76	2.9	3.3	2.8	3.3	2.7	3.7
F 20 3_372.9	372.9	0.30	0.56	0.32	0.76	2.9	3.3	2.8	3.3	2.7	3.7
F 20 3_419.3	419.3	0.30	0.56	0.32	0.76	2.9	3.3	2.8	3.3	2.7	3.7
F 20 3_471.7	471.7	0.30	0.56	0.32	0.76	2.9	3.3	2.8	3.3	2.7	3.7
F 20 3_545.3	545.3	0.30	0.56	0.32	0.76	2.9	3.3	2.8	3.3	2.7	3.7

F 25

	i	**J** (•10^{-4}) [kgm^2]							
		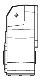	IEC 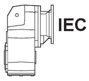						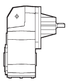
			63	**71**	**80**	**90**	**100**	**112**	
F 25 2_6.9	6.9	2.7	—	—	5.4	5.3	6.5	6.5	4.4
F 25 2_8.4	8.4	1.9	—	—	4.6	4.5	5.7	5.7	3.6
F 25 2_9.4	9.4	1.6	2.3	2.3	4.3	4.2	5.4	5.4	3.3
F 25 2_10.6	10.6	1.9	—	—	4.6	4.5	5.7	5.7	3.6
F 25 2_13.0	13.0	1.3	—	—	4.1	4.0	5.2	5.2	3.0
F 25 2_14.5	14.5	1.1	1.8	1.8	3.9	3.8	5.0	5.0	2.8
F 25 2_16.6	16.6	0.90	1.6	1.6	3.7	3.5	4.7	4.7	2.6
F 25 2_18.6	18.6	0.77	1.5	1.5	3.5	3.4	4.6	4.6	2.5
F 25 2_21.8	21.8	0.57	1.3	1.3	3.3	3.2	4.4	4.4	2.3
F 25 2_23.8	23.8	0.48	1.2	1.2	3.2	3.1	4.3	4.3	2.2
F 25 2_27.2	27.2	0.40	1.1	1.1	3.2	3.0	4.2	4.2	2.1
F 25 2_30.0	30.0	0.35	1.1	1.1	3.1	3.0	4.2	4.2	2.1
F 25 2_32.2	32.2	0.31	1.0	1.0	3.1	2.9	4.2	4.2	2.0
F 25 2_36.4	36.4	0.26	1.0	1.0	3.0	2.9	4.1	4.1	2.0
F 25 2_40.7	40.7	0.22	1.0	0.94	3.0	2.9	4.1	4.1	1.9
F 25 2_44.4	44.4	0.20	0.93	0.92	3.0	2.8	4.0	4.0	1.9
F 25 3_45.6	45.6	0.79	—	—	3.6	3.4	4.6	4.6	2.5
F 25 3_50.8	50.8	0.70	1.4	1.4	3.5	3.3	4.5	4.5	2.4
F 25 3_58.3	58.3	0.58	1.3	1.3	3.3	3.2	4.4	4.4	2.3
F 25 3_65.3	65.3	0.52	1.2	1.2	3.3	3.1	4.4	4.4	2.2
F 25 3_76.6	76.6	0.38	1.1	1.1	3.1	3.0	4.2	4.2	2.1
F 25 3_83.4	83.4	0.32	1.0	1.0	3.1	3.0	4.2	4.2	2.0
F 25 3_95.5	95.5	0.28	1.0	1.0	3.0	2.9	4.1	4.1	2.0
F 25 3_105.4	105.4	0.25	1.0	1.0	3.0	2.9	4.1	4.1	2.0
F 25 3_113.0	113.0	0.23	0.95	0.94	3.0	2.9	4.1	4.1	1.9
F 25 3_127.8	127.8	0.20	0.92	0.91	3.0	2.8	4.0	4.0	1.9
F 25 3_143.0	143.0	0.17	0.90	0.89	2.9	2.8	4.0	4.0	1.9
F 25 3_155.9	155.9	0.15	0.88	0.87	2.9	2.8	4.0	4.0	1.9
F 25 3_174.2	174.2	0.13	0.87	0.86	2.9	2.8	4.0	4.0	1.8
F 25 3_193.6	193.6	0.12	0.85	0.84	2.9	2.7	4.0	4.0	1.8
F 25 3_227.8	227.8	0.10	0.83	0.82	2.9	2.7	3.9	3.9	1.8
F 25 3_256.1	256.1	0.09	0.79	0.78	2.8	2.7	3.9	3.9	1.8
F 25 3_288.1	288.1	0.08	0.78	0.77	2.8	2.7	3.9	3.9	1.8
F 25 3_333.1	333.1	0.03	0.78	0.76	—	—	—	—	1.8
F 25 4_393.9	393.9	0.02	0.80	0.78	2.8	2.7	3.9	3.9	0.70
F 25 4_434.9	434.9	0.02	0.79	0.78	2.8	2.7	3.9	3.9	0.70
F 25 4_466.0	466.0	0.02	0.79	0.78	2.8	2.7	3.9	3.9	0.70
F 25 4_527.3	527.3	0.02	0.79	0.78	2.8	2.7	3.9	3.9	0.70
F 25 4_589.7	589.7	0.02	0.79	0.78	2.8	2.7	3.9	3.9	0.70
F 25 4_643.3	643.3	0.02	0.79	0.78	2.8	2.7	3.9	3.9	0.70
F 25 4_718.7	718.7	0.02	0.79	0.78	2.8	2.7	3.9	3.9	0.70
F 25 4_798.5	798.5	0.01	0.79	0.77	2.8	2.7	3.9	3.9	0.70
F 25 4_939.8	939.8	0.01	0.79	0.77	2.8	2.7	3.9	3.9	0.69
F 25 4_1057	1057	0.01	0.79	0.77	2.8	2.7	3.9	3.9	0.64
F 25 4_1189	1189	0.01	0.78	0.77	2.8	2.7	3.9	3.9	0.64
F 25 4_1374	1374	0.01	0.78	0.77	2.8	2.7	3.9	3.9	0.64

F 25

	i	J (•10^{-4}) [kgm^2] SERVO 60A		60B 80A		95A		80C 95B 110A		95C 110B	
		SK	SC	SK	SC	SK	SC	SK	SC	SK	SC
F 25 2_6.9	6.9	—	—	—	—	—	—	5.4	5.9	5.3	6.3
F 25 2_8.4	8.4	—	—	—	—	—	—	4.6	5.1	4.5	5.5
F 25 2_9.4	9.4	1.9	2.1	1.9	2.3	4.4	4.9	4.3	4.8	4.2	5.2
F 25 2_10.6	10.6	—	—	—	—	—	—	4.6	5.1	4.5	5.5
F 25 2_13.0	13.0	—	—	—	—	—	—	4.1	4.6	4.0	5.0
F 25 2_14.5	14.5	1.4	1.6	1.4	1.8	3.9	4.4	3.9	4.4	3.8	4.8
F 25 2_16.6	16.6	1.2	1.4	1.2	1.6	3.7	4.2	3.7	4.2	3.5	4.5
F 25 2_18.6	18.6	1.0	1.3	1.1	1.5	3.6	4.0	3.5	4.0	3.4	4.4
F 25 2_21.8	21.8	0.84	1.1	0.86	1.3	3.4	3.8	3.3	3.8	3.2	4.2
F 25 2_23.8	23.8	0.75	1.0	0.77	1.2	3.3	3.7	3.2	3.7	3.1	4.1
F 25 2_27.2	27.2	0.67	0.93	0.69	1.1	3.2	3.7	3.2	3.7	3.0	4.0
F 25 2_30.0	30.0	0.62	0.88	0.64	1.1	3.2	3.6	3.1	3.6	3.0	4.0
F 25 2_32.2	32.2	0.58	0.84	1.4	1.8	3.1	3.6	3.1	3.6	2.9	3.9
F 25 2_36.4	36.4	0.53	0.79	0.55	0.99	3.1	3.5	3.0	3.5	2.9	3.9
F 25 2_40.7	40.7	0.49	0.75	0.51	0.95	3.0	3.5	3.0	3.5	2.9	3.9
F 25 2_44.4	44.4	0.47	0.73	0.49	0.93	3.0	3.5	3.0	3.5	2.8	3.8
F 25 3_45.6	45.6	1.1	1.3	1.1	1.5	3.6	4.0	3.6	4.1	3.4	4.4
F 25 3_50.8	50.8	0.97	1.2	0.99	1.4	3.5	4.0	3.5	4.0	3.3	4.3
F 25 3_58.3	58.3	0.85	1.1	0.87	1.3	3.4	3.8	3.3	3.8	3.2	4.2
F 25 3_65.3	65.3	0.79	1.1	0.84	1.2	3.3	3.8	3.3	3.8	3.1	4.1
F 25 3_76.6	76.6	0.65	0.91	0.67	1.1	3.2	3.6	3.1	3.6	3.0	4.0
F 25 3_83.4	83.4	0.59	0.85	0.61	1.0	3.1	3.6	3.1	3.6	3.0	4.0
F 25 3_95.5	95.5	0.55	0.81	0.57	1.0	3.1	3.5	3.0	3.5	2.9	3.9
F 25 3_105.4	105.4	0.52	0.78	0.54	0.98	3.1	3.5	3.0	3.5	2.9	3.9
F 25 3_113.0	113.0	0.50	0.76	0.52	0.96	3.1	3.5	3.0	3.5	2.9	3.9
F 25 3_127.8	127.8	0.47	0.73	0.49	0.93	3.0	3.5	3.0	3.5	2.8	3.8
F 25 3_143.0	143.0	0.44	0.70	0.46	0.90	3.0	3.4	2.9	3.4	2.8	3.8
F 25 3_155.9	155.9	0.42	0.68	0.44	0.88	3.0	3.4	2.9	3.4	2.8	3.8
F 25 3_174.2	174.2	0.40	0.66	0.42	0.86	3.0	3.4	2.9	3.4	2.8	3.8
F 25 3_193.6	193.6	0.39	0.65	0.41	0.85	2.9	3.4	2.9	3.4	2.7	3.7
F 25 3_227.8	227.8	0.37	0.63	0.39	0.83	2.9	3.4	2.9	3.4	2.7	3.7
F 25 3_256.1	256.1	0.36	0.62	—	—	—	—	2.8	3.3	2.7	3.7
F 25 3_288.1	288.1	0.35	0.61	—	—	—	—	2.8	3.3	2.7	3.7
F 25 3_333.1	333.1	0.30	0.56	—	—	—	—	—	—	—	—
F 25 4_393.9	393.9	0.29	0.55	0.31	0.75	2.8	3.3	2.8	3.3	2.7	3.7
F 25 4_434.9	434.9	0.29	0.55	0.31	0.75	2.8	3.3	2.8	3.3	2.7	3.7
F 25 4_466.0	466.0	0.29	0.55	0.31	0.75	2.8	3.3	2.8	3.3	2.7	3.7
F 25 4_527.3	527.3	0.29	0.55	0.31	0.75	2.8	3.3	2.8	3.3	2.7	3.7
F 25 4_589.7	589.7	0.29	0.55	0.31	0.75	2.8	3.3	2.8	3.3	2.7	3.7
F 25 4_643.3	643.3	0.29	0.55	0.31	0.75	2.8	3.3	2.8	3.3	2.7	3.7
F 25 4_718.7	718.7	0.29	0.55	0.31	0.75	2.8	3.3	2.8	3.3	2.7	3.7
F 25 4_798.5	798.5	0.28	0.54	0.30	0.74	2.8	3.3	2.8	3.3	2.7	3.7
F 25 4_939.8	939.8	0.28	0.54	0.30	0.74	2.8	3.3	2.8	3.3	2.7	3.7
F 25 4_1057	1057	0.28	0.54	0.30	0.74	2.8	3.3	2.8	3.3	2.7	3.7
F 25 4_1189	1189	0.28	0.54	0.30	0.74	2.8	3.3	2.8	3.3	2.7	3.7
F 25 4_1374	1374	0.28	0.54	0.30	0.74	2.8	3.3	2.8	3.3	2.7	3.7

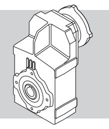

F 31

	i	J $(\cdot 10^{-4})$ [kgm^2]								
		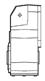	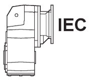 IEC							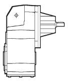
			63	71	80	90	100	112	132	
F 31 2_6.9	6.9	5.0	—	—	7.8	7.6	8.9	8.9	22	7.1
F 31 2_8.2	8.2	3.7	—	—	6.5	6.3	7.5	7.5	20	5.8
F 31 2_9.0	9.0	3.2	—	—	6.0	5.8	7.0	7.0	20	5.3
F 31 2_10.7	10.7	3.5	—	—	6.3	6.2	7.4	7.4	20	5.6
F 31 2_12.7	12.7	2.6	—	—	5.4	5.3	6.5	6.5	19	4.7
F 31 2_13.9	13.9	2.3	—	—	5.1	4.9	6.2	6.2	19	4.4
F 31 2_16.8	16.8	1.8	—	—	4.6	4.4	5.6	5.6	18	3.9
F 31 2_18.5	18.5	1.5	2.2	2.2	4.2	4.1	5.3	5.3	18	3.5
F 31 2_21.1	21.1	1.1	1.8	1.8	3.9	3.7	5.0	5.0	18	3.2
F 31 2_23.4	23.4	1.0	1.7	1.7	3.7	3.6	4.8	4.8	18	3.0
F 31 2_27.3	27.3	0.78	1.5	1.5	3.5	3.4	4.6	4.6	17	2.8
F 31 2_30.1	30.1	0.65	1.4	1.4	3.4	3.3	4.5	4.5	17	2.7
F 31 2_34.4	34.4	0.53	1.3	1.2	3.3	3.2	4.4	4.4	17	2.6
F 31 2_37.7	37.7	0.47	1.2	1.2	3.2	3.1	4.3	4.3	17	2.5
F 31 2_40.4	40.4	0.42	1.1	1.1	3.2	3.0	4.3	4.3	—	2.5
F 31 2_44.6	44.6	0.37	1.1	1.1	3.1	3.0	4.2	4.2	—	2.4
F 31 3_47.5	47.5	1.6	—	—	4.3	4.2	5.4	5.4	18	3.6
F 31 3_52.1	52.1	1.4	—	—	4.2	4.0	5.3	5.3	18	3.5
F 31 3_62.8	62.8	1.2	—	—	3.9	3.8	5.0	5.0	18	3.2
F 31 3_69.1	69.1	1.0	1.7	1.7	3.7	3.6	4.8	4.8	18	3.0
F 31 3_78.9	78.9	0.72	1.4	1.4	3.5	3.4	4.6	4.6	17	2.8
F 31 3_87.4	87.4	0.66	1.4	1.4	3.4	3.3	4.5	4.5	17	2.7
F 31 3_101.9	101.9	0.54	1.3	1.2	3.3	3.2	4.4	4.4	17	2.6
F 31 3_112.5	112.5	0.46	1.2	1.2	3.2	3.1	4.3	4.3	17	2.5
F 31 3_128.4	128.4	0.38	1.1	1.1	3.1	3.0	4.2	4.2	17	2.4
F 31 3_140.7	140.7	0.35	1.1	1.1	3.1	3.0	4.2	4.2	17	2.4
F 31 3_150.8	150.8	0.31	1.0	1.0	3.1	2.9	4.2	4.2	—	2.4
F 31 3_166.8	166.8	0.28	1.0	1.0	3.0	2.9	4.1	4.1	—	2.3
F 31 3_185.4	185.4	0.24	1.0	1.0	3.0	2.9	4.1	4.1	—	2.3
F 31 3_202.3	202.3	0.21	0.94	0.93	3.0	2.8	4.1	4.1	—	2.3
F 31 3_228.2	228.2	0.18	0.92	0.90	2.9	2.8	4.0	4.0	—	2.2
F 31 3_253.6	253.6	0.16	0.89	0.88	2.9	2.8	4.0	4.0	—	2.2
F 31 3_293.8	293.8	0.13	0.86	0.85	2.9	2.8	4.0	4.0	—	2.2
F 31 3_332.8	332.8	0.11	0.82	0.81	2.9	2.7	4.0	4.0	—	2.2
F 31 3_374.4	374.4	0.10	0.81	0.79	2.9	2.7	3.9	3.9	—	2.2
F 31 4_418.9	418.9	0.09	0.86	0.85	2.9	2.8	3.9	3.9	—	0.77
F 31 4_462.6	462.6	0.08	0.86	0.84	2.9	2.7	3.9	3.9	—	0.77
F 31 4_527.8	527.8	0.08	0.85	0.84	2.9	2.7	3.9	3.9	—	0.76
F 31 4_578.6	578.6	0.08	0.85	0.84	2.9	2.7	3.9	3.9	—	0.76
F 31 4_619.9	619.9	0.07	0.85	0.83	2.9	2.7	3.9	3.9	—	0.76
F 31 4_685.6	685.6	0.07	0.85	0.83	2.9	2.7	3.9	3.9	—	0.76
F 31 4_762.3	762.3	0.07	0.84	0.83	2.9	2.7	3.9	3.9	—	0.75
F 31 4_831.6	831.6	0.07	0.84	0.83	2.9	2.7	3.9	3.9	—	0.75
F 31 4_938.2	938.2	0.07	0.84	0.83	2.9	2.7	3.9	3.9	—	0.75
F 31 4_1042	1042	0.07	0.84	0.83	2.9	2.7	3.9	3.9	—	0.75
F 31 4_1208	1208	0.06	0.84	0.82	2.9	2.7	3.9	3.9	—	0.75
F 31 4_1368	1368	0.06	0.84	0.82	2.9	2.7	3.9	3.9	—	0.75
F 31 4_1539	1539	0.06	0.84	0.82	2.9	2.7	3.9	3.9	—	0.75

F 31

		J ($\cdot 10^{-4}$) [kgm^2]											
		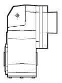 SERVO											
	i	60A		60B 80A		95A		80C 95B 110A		95C 110B		130A	
		SK	SC	SK	SC	SK	SC	SK	SC	SK	SC	SK	SC
F 31 2_6.9	6.9	—	—	—	—	—	—	7.8	8.3	7.6	8.6	7.6	8.6
F 31 2_8.2	8.2	—	—	—	—	—	—	6.5	7.0	6.3	7.3	6.3	7.3
F 31 2_9.0	9.0	—	—	—	—	—	—	6.0	6.5	5.8	6.8	5.8	6.8
F 31 2_10.7	10.7	—	—	—	—	—	—	6.3	6.8	6.2	7.2	6.2	7.2
F 31 2_12.7	12.7	—	—	—	—	—	—	5.4	5.9	5.3	6.3	5.3	6.3
F 31 2_13.9	13.9	—	—	—	—	—	—	5.1	5.6	4.9	5.9	4.9	5.9
F 31 2_16.8	16.8	—	—	—	—	—	—	4.6	5.1	4.4	5.4	4.4	5.4
F 31 2_18.5	18.5	1.8	2.0	1.8	2.2	4.3	4.8	4.2	4.7	4.1	5.1	4.1	5.1
F 31 2_21.1	21.1	1.4	1.6	1.4	1.8	3.9	4.3	3.9	4.4	3.7	4.7	3.7	4.7
F 31 2_23.4	23.4	1.3	1.5	1.3	1.7	3.8	4.3	3.7	4.2	3.6	4.6	3.6	4.6
F 31 2_27.3	27.3	1.1	1.3	1.1	1.5	3.6	4.0	3.5	4.0	3.4	4.4	3.4	4.4
F 31 2_30.1	30.1	0.92	1.2	0.94	1.4	3.5	3.9	3.4	3.9	3.3	4.3	3.3	4.3
F 31 2_34.4	34.4	0.80	1.1	0.82	1.3	3.4	3.8	3.3	3.8	3.2	4.2	3.2	4.2
F 31 2_37.7	37.7	0.74	1.0	0.76	1.2	3.3	3.7	3.2	3.7	3.1	4.1	3.1	4.1
F 31 2_40.4	40.4	0.69	0.95	0.71	1.1	3.2	3.7	3.2	3.7	3.0	4.0	3.0	4.0
F 31 2_44.6	44.6	0.64	0.90	0.66	1.1	3.2	3.6	3.1	3.6	3.0	4.0	3.0	4.0
F 31 3_47.5	47.5	—	—	—	—	—	—	4.3	4.8	4.2	5.2	4.2	5.2
F 31 3_52.1	52.1	—	—	—	—	—	—	4.2	4.7	4.0	5.0	4.0	5.0
F 31 3_62.8	62.8	—	—	—	—	—	—	3.9	4.4	3.8	4.8	3.8	4.8
F 31 3_69.1	69.1	1.3	1.5	1.3	1.7	3.8	4.3	3.7	4.2	3.6	4.6	3.6	4.6
F 31 3_78.9	78.9	0.99	1.3	1.0	1.4	3.5	4.0	3.5	4.0	3.4	4.4	3.4	4.4
F 31 3_87.4	87.4	0.93	1.2	0.95	1.4	3.5	3.9	3.4	3.9	3.3	4.3	3.3	4.3
F 31 3_101.9	101.9	0.81	1.1	0.83	1.3	3.4	3.8	3.3	3.8	3.2	4.2	3.2	4.2
F 31 3_112.5	112.5	0.73	0.99	0.75	1.2	3.3	3.7	3.2	3.7	3.1	4.1	3.1	4.1
F 31 3_128.4	128.4	0.65	0.91	0.67	1.1	3.2	3.6	3.1	3.6	3.0	4.0	3.0	4.0
F 31 3_140.7	140.7	0.62	0.88	0.64	1.1	3.2	3.6	3.1	3.6	3.0	4.0	3.0	4.0
F 31 3_150.8	150.8	0.58	0.84	0.60	1.0	3.1	3.6	3.1	3.6	2.9	3.9	2.9	3.9
F 31 3_166.8	166.8	0.55	0.81	0.57	1.0	3.1	3.5	3.0	3.5	2.9	3.9	2.9	3.9
F 31 3_185.4	185.4	0.51	0.77	0.53	0.97	3.1	3.5	3.0	3.5	2.9	3.9	2.9	3.9
F 31 3_202.3	202.3	0.48	0.74	0.50	0.93	3.0	3.5	3.0	3.5	2.8	3.8	2.8	3.8
F 31 3_228.2	228.2	0.45	0.71	0.47	0.91	3.0	3.4	2.9	3.4	2.8	3.8	2.8	3.8
F 31 3_253.6	253.6	0.43	0.69	0.45	0.89	3.0	3.4	2.9	3.4	2.8	3.8	2.8	3.8
F 31 3_293.8	293.8	0.40	0.66	0.42	0.86	3.0	3.4	2.9	3.4	2.8	3.8	2.8	3.8
F 31 3_332.8	332.8	0.38	0.64	—	—	—	—	2.9	3.4	2.7	3.7	2.7	3.7
F 31 3_374.4	374.4	0.37	0.63	—	—	—	—	2.9	3.4	2.7	3.7	2.7	3.7
F 31 4_418.9	418.9	0.36	0.62	0.38	0.82	2.9	3.3	2.9	3.4	2.8	3.8	—	—
F 31 4_462.6	462.6	0.35	0.61	0.37	0.81	2.9	3.3	2.9	3.4	2.7	3.7	—	—
F 31 4_527.8	527.8	0.35	0.61	0.37	0.81	2.9	3.3	2.9	3.4	2.7	3.7	—	—
F 31 4_578.6	578.6	0.35	0.61	0.37	0.81	2.9	3.3	2.9	3.4	2.7	3.7	—	—
F 31 4_619.9	619.9	0.34	0.60	0.36	0.80	2.9	3.3	2.9	3.4	2.7	3.7	—	—
F 31 4_685.6	685.6	0.34	0.60	0.36	0.80	2.9	3.3	2.9	3.4	2.7	3.7	—	—
F 31 4_762.3	762.3	0.34	0.60	0.36	0.80	2.9	3.3	2.9	3.4	2.7	3.7	—	—
F 31 4_831.6	831.6	0.34	0.60	0.36	0.80	2.9	3.3	2.9	3.4	2.7	3.7	—	—
F 31 4_938.2	938.2	0.34	0.60	0.36	0.80	2.9	3.3	2.9	3.4	2.7	3.7	—	—
F 31 4_1042	1042	0.34	0.60	0.36	0.80	2.9	3.3	2.9	3.4	2.7	3.7	—	—
F 31 4_1208	1208	0.33	0.59	0.35	0.79	2.9	3.3	2.9	3.4	2.7	3.7	—	—
F 31 4_1368	1368	0.33	0.59	0.35	0.79	2.9	3.3	2.9	3.4	2.7	3.7	—	—
F 31 4_1539	1539	0.83	0.59	0.35	0.79	2.9	3.3	2.9	3.4	2.7	3.7	—	—

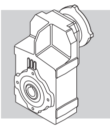

F 41

	i	J (•10-4) [kgm2]							
		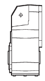	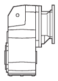 IEC						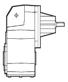
			63	71	80	90	100	112	132	
F 41 2_6.7	6.7	12	—	—	15	15	18	18	29	21
F 41 2_9.1	9.1	7.2	—	—	10	9.8	13	13	24	16
F 41 2_10.8	10.8	8.0	—	—	11	11	13	13	25	17
F 41 2_14.6	14.6	5.0	—	—	7.7	7.6	10	10	21	14
F 41 2_17.1	17.1	3.5	—	—	6.3	6.2	8.9	8.9	20	12
F 41 2_18.9	18.9	3.1	—	—	5.8	5.7	8.5	8.5	20	12
F 41 2_24.1	24.1	2.1	2.8	2.8	4.9	4.8	7.5	7.5	19	11
F 41 2_30.1	30.1	1.5	2.2	2.2	4.3	4.2	6.9	6.9	18	10
F 41 2_38.2	38.2	0.95	1.7	1.7	3.7	3.6	6.3	6.3	17	9.7
F 41 2_47.9	47.9	0.67	1.4	1.4	3.4	3.3	6.0	6.0	17	9.5
F 41 3_51.5	51.5	3.0	—	—	5.7	5.6	8.4	8.4	19	12
F 41 3_60.2	60.2	2.1	—	—	4.9	4.7	7.5	7.5	19	11
F 41 3_66.5	66.5	1.9	—	—	4.7	4.5	7.3	7.3	18	11
F 41 3_84.9	84.9	1.4	2.1	2.1	4.2	4.0	6.8	6.8	18	10
F 41 3_106.0	106.0	1.1	1.8	1.7	3.8	3.7	6.4	6.4	18	9.8
F 41 3_134.4	134.4	0.66	1.4	1.4	3.4	3.3	6.0	6.0	17	9.4
F 41 3_168.7	168.7	0.49	1.2	1.2	3.2	3.1	5.9	5.9	17	9.3
F 41 3_180.7	180.7	0.43	1.1	1.1	3.2	3.1	5.8	5.8	—	9.2
F 41 3_198.9	198.9	0.39	1.1	1.1	3.1	3.0	5.8	5.8	—	9.2
F 41 3_220.1	220.1	0.36	1.1	1.1	3.1	3.0	5.7	5.7	—	9.1
F 41 3_240.1	240.1	0.31	1.0	1.0	3.1	2.9	5.7	5.7	—	9.1
F 41 3_266.9	266.9	0.28	1.0	1.0	3.0	2.9	5.7	5.7	—	9.1
F 41 3_296.6	296.6	0.23	1.0	1.0	3.0	2.9	5.6	5.6	—	9.0
F 41 3_344.8	344.8	0.19	0.92	0.91	2.9	2.8	5.6	5.6	—	9.0
F 41 4_433.7	433.7	0.21	0.94	0.93	3.0	2.8	4.1	4.1	—	1.9
F 41 4_549.8	549.8	0.19	0.92	0.90	2.9	2.8	4.0	4.0	—	1.9
F 41 4_690.1	690.1	0.18	0.91	0.89	2.9	2.8	4.0	4.0	—	1.9
F 41 4_739.4	739.4	0.17	0.90	0.89	2.9	2.8	4.0	4.0	—	1.9
F 41 4_813.8	813.8	0.17	0.90	0.89	2.9	2.8	4.0	4.0	—	1.9
F 41 4_900.5	900.5	0.17	0.90	0.89	2.9	2.8	4.0	4.0	—	1.9
F 41 4_982.4	982.4	0.17	0.90	0.88	2.9	2.8	4.0	4.0	—	1.9
F 41 4_1092	1092	0.16	0.89	0.88	2.9	2.8	4.0	4.0	—	1.9
F 41 4_1213	1213	0.16	0.89	0.88	2.9	2.8	4.0	4.0	—	1.9
F 41 4_1411	1411	0.16	0.89	0.88	2.9	2.8	4.0	4.0	—	1.9

F 41

J (•10^{-4}) [kgm^2]

SERVO

	i	60A		60B 80A		80B		95A		80C 95B 110A		95C 110B		130A		130B 180A		180B	
		SK	SC	SK	SC	SK	SC	SK	SC	SK	SC	SK	SC	SK	SC	SK	SC	SK	SC
F 41 2_6.7	6.7	—	—	—	—	—	—	—	—	15	16	15	16	15	16	29	31	29	34
F 41 2_9.1	9.1	—	—	—	—	—	—	—	—	10	11	9.8	11	9.8	11	24	27	24	29
F 41 2_10.8	10.8	—	—	—	—	—	—	—	—	11	12	11	12	11	12	25	27	25	30
F 41 2_14.6	14.6	—	—	—	—	—	—	—	—	7.7	8.2	7.6	8.6	7.6	8.6	22	24	21	26
F 41 2_17.1	17.1	—	—	—	—	—	—	—	—	6.3	6.8	6.2	7.2	6.2	7.2	20	23	20	25
F 41 2_18.9	18.9	—	—	—	—	—	—	—	—	5.8	6.3	5.7	6.7	5.7	6.7	20	23	20	25
F 41 2_24.1	24.1	—	—	—	—	4.9	5.4	4.9	5.4	4.9	5.4	4.8	5.8	4.8	5.8	19	22	19	24
F 41 2_30.1	30.1	—	—	—	—	4.3	4.8	4.3	4.8	4.3	4.8	4.2	5.2	4.2	5.2	18	21	18	23
F 41 2_38.2	38.2	—	—	—	—	3.8	4.2	3.8	4.2	3.7	4.2	3.6	4.6	3.6	4.6	18	20	17	22
F 41 2_47.9	47.9	—	—	—	—	3.5	3.9	3.5	3.9	3.4	3.9	3.3	4.3	3.3	4.3	18	20	17	22
F 41 3_51.5	51.5	—	—	—	—	—	—	—	—	5.7	6.2	5.6	6.6	5.6	6.6	20	22	19	24
F 41 3_60.2	60.2	—	—	—	—	—	—	—	—	4.9	5.4	4.7	5.7	4.7	5.7	19	22	19	24
F 41 3_66.5	66.5	—	—	—	—	—	—	—	—	4.7	5.2	4.5	5.5	4.5	5.5	19	21	18	23
F 41 3_84.9	84.9	—	—	—	—	4.2	4.7	4.2	4.7	4.2	4.7	4.0	5.0	4.0	5.0	18	21	18	23
F 41 3_106.0	106.0	—	—	—	—	3.9	4.4	3.9	4.4	3.8	4.3	3.7	4.7	3.7	4.7	18	21	18	23
F 41 3_134.4	134.4	—	—	—	—	3.5	3.9	3.5	3.9	3.4	3.9	3.3	4.3	3.3	4.3	18	20	17	22
F 41 3_168.7	168.7	—	—	—	—	3.3	3.7	3.3	3.7	3.2	3.7	3.1	4.1	3.1	4.1	17	20	17	22
F 41 3_180.7	180.7	—	—	—	—	3.3	3.7	3.3	3.7	3.2	3.7	3.1	4.1	3.1	4.1	—	—	—	—
F 41 3_198.9	198.9	—	—	—	—	3.2	3.6	3.2	3.6	3.1	3.6	3.0	4.0	3.0	4.0	—	—	—	—
F 41 3_220.1	220.1	—	—	—	—	3.2	3.6	3.2	3.6	3.1	3.6	3.0	4.0	3.0	4.0	—	—	—	—
F 41 3_240.1	240.1	—	—	—	—	3.1	3.6	3.1	3.6	3.1	3.6	2.9	3.9	2.9	3.9	—	—	—	—
F 41 3_266.9	266.9	—	—	—	—	3.1	3.5	3.1	3.5	3.0	3.5	2.9	3.9	2.9	3.9	—	—	—	—
F 41 3_296.6	296.6	—	—	—	—	3.1	3.5	3.1	3.5	3.0	3.5	2.9	3.9	2.9	3.9	—	—	—	—
F 41 3_344.8	344.8	—	—	—	—	3.0	3.4	3.0	3.4	2.9	3.4	2.8	3.8	2.8	3.8	—	—	—	—
F 41 4_433.7	433.7	0.48	0.74	0.50	0.94	—	—	3.0	3.5	3.0	3.5	2.8	3.8	—	—	—	—	—	—
F 41 4_549.8	549.8	0.46	0.72	0.48	0.92	—	—	3.0	3.4	2.9	3.4	2.8	3.8	—	—	—	—	—	—
F 41 4_690.1	690.1	0.45	0.71	0.47	0.91	—	—	3.0	3.4	2.9	3.4	2.8	3.8	—	—	—	—	—	—
F 41 4_739.4	739.4	0.44	0.70	0.46	0.90	—	—	3.0	3.4	2.9	3.4	2.8	3.8	—	—	—	—	—	—
F 41 4_813.8	813.8	0.44	0.70	0.46	0.90	—	—	3.0	3.4	2.9	3.4	2.8	3.8	—	—	—	—	—	—
F 41 4_900.5	900.5	0.44	0.70	0.46	0.90	—	—	3.0	3.4	2.9	3.4	2.8	3.8	—	—	—	—	—	—
F 41 4_982.4	982.4	0.44	0.70	0.46	0.90	—	—	3.0	3.4	2.9	3.4	2.8	3.8	—	—	—	—	—	—
F 41 4_1092	1092	0.43	0.69	0.45	0.89	—	—	3.0	3.4	2.9	3.4	2.8	3.8	—	—	—	—	—	—
F 41 4_1213	1213	0.43	0.69	0.45	0.89	—	—	3.0	3.4	2.9	3.4	2.8	3.8	—	—	—	—	—	—
F 41 4_1411	1411	0.43	0.69	0.45	0.89	—	—	3.0	3.4	2.9	3.4	2.8	3.8	—	—	—	—	—	—

F 51

	i	**J** (•10^{-4}) [kgm^2]										
		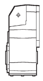	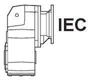 IEC									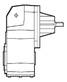
			63	**71**	**80**	**90**	**100**	**112**	**132**	**160**	**180**	
F 51 2_7.2	7.2	25	—	—	28	28	30	30	42	101	103	34
F 51 2_9.1	9.1	17	—	—	20	19	22	22	33	92	94	26
F 51 2_11.1	11.1	16	—	—	19	19	22	22	33	92	94	25
F 51 2_14.0	14.0	11	—	—	14	14	17	17	28	87	89	20
F 51 2_18.8	18.8	7.0	—	—	9.8	9.6	12	12	24	83	85	16
F 51 2_23.8	23.8	4.5	—	—	7.3	7.2	9.9	9.9	21	80	82	13
F 51 2_30.0	30.0	3.1	3.8	3.8	5.9	5.8	8.5	8.5	20	79	81	12
F 51 2_37.1	37.1	2.2	3.0	3.0	5.0	4.9	7.6	7.6	19	78	80	11
F 51 3_48.9	48.9	6.2	—	—	8.9	8.8	12	12	23	82	84	15
F 51 3_65.8	65.8	4.2	—	—	6.9	6.8	9.6	9.6	21	80	82	13
F 51 3_83.2	83.2	2.7	—	—	5.5	5.4	8.1	8.1	19	78	80	12
F 51 3_105.1	105.1	2.0	2.7	2.7	4.8	4.6	7.4	7.4	19	78	80	11
F 51 3_129.9	129.9	1.5	2.2	2.2	4.3	4.1	6.9	6.9	18	77	79	10
F 51 3_165.6	165.6	0.95	1.7	1.7	3.7	3.6	6.3	6.3	17	76	78	9.7
F 51 3_202.4	202.4	0.72	1.4	1.4	3.5	3.3	6.1	6.1	17	76	78	9.5
F 51 3_216.9	216.9	0.64	1.4	1.3	3.4	3.3	6.0	6.0	—	—	—	9.4
F 51 3_239.8	239.8	0.60	1.3	1.3	3.4	3.2	6.0	6.0	—	—	—	9.4
F 51 3_262.1	262.1	0.53	1.3	1.3	3.3	3.2	5.9	5.9	—	—	—	9.3
F 51 3_285.9	285.9	0.46	1.2	1.2	3.2	3.1	5.8	5.8	—	—	—	9.2
F 51 3_317.3	317.3	0.39	1.1	1.1	3.2	3.0	5.8	5.8	—	—	—	9.2
F 51 3_352.5	352.5	0.28	1.1	1.1	3.1	3.0	5.7	5.7	—	—	—	9.1
F 51 4_429.1	429.1	0.36	1.1	1.1	3.1	3.0	5.7	5.7	—	—	—	2.4
F 51 4_530.5	530.5	0.33	1.1	1.0	3.1	3.0	5.7	5.7	—	—	—	2.4
F 51 4_676.3	676.3	0.30	1.0	1.0	3.1	2.9	5.7	5.7	—	—	—	2.4
F 51 4_826.4	826.4	0.28	1.0	1.0	3.0	2.9	5.7	5.7	—	—	—	2.3
F 51 4_885.5	885.5	0.28	1.0	1.0	3.0	2.9	5.7	5.7	—	—	—	2.3
F 51 4_979.4	979.4	0.28	1.0	1.0	3.0	2.9	5.7	5.7	—	—	—	2.3
F 51 4_1070	1070	0.27	1.0	1.0	3.0	2.9	5.6	5.6	—	—	—	2.3
F 51 4_1168	1168	0.27	1.0	1.0	3.0	2.9	5.6	5.6	—	—	—	2.3
F 51 4_1296	1296	0.26	1.0	1.0	3.0	2.9	5.6	5.6	—	—	—	2.3
F 51 4_1439	1439	0.26	1.0	1.0	3.0	2.9	5.6	5.6	—	—	—	2.3

F 51

	i	J (•10^{-4}) [kgm^2]											
		SERVO											
		80B		95A		80C 95B 110A		95C 110B 130A		130B 180A		180B	
		SK	SC	SK	SC	SK	SC	SK	SC	SK	SC	SK	SC
F 51 2_7.2	7.2	—	—	—	—	28	29	28	23	42	44	42	47
F 51 2_9.1	9.1	—	—	—	—	20	21	19	20	34	36	33	38
F 51 2_11.1	11.1	—	—	—	—	19	20	19	20	33	35	33	38
F 51 2_14.0	14.0	—	—	—	—	14	15	14	15	28	30	28	33
F 51 2_18.8	18.8	—	—	—	—	9.8	10	9.6	11	24	26	24	29
F 51 2_23.8	23.8	—	—	—	—	7.3	7.8	7.2	8.2	21	24	21	26
F 51 2_30.0	30.0	5.9	6.4	5.9	6.4	5.9	6.4	5.8	6.8	20	23	20	25
F 51 2_37.1	37.1	5.0	5.5	5.0	5.5	5.0	5.5	4.9	5.9	19	22	19	24
F 51 3_48.9	48.9	—	—	—	—	8.9	9.4	8.8	9.8	23	26	23	28
F 51 3_65.8	65.8	—	—	—	—	6.9	7.4	6.8	7.8	21	24	21	26
F 51 3_83.2	83.2	—	—	—	—	5.5	6.0	5.4	6.4	20	22	19	24
F 51 3_105.1	105.1	4.8	5.3	4.8	5.3	4.8	5.3	4.6	5.6	19	21	19	24
F 51 3_129.9	129.9	4.3	4.8	4.3	4.8	4.3	4.8	4.1	5.1	18	21	18	23
F 51 3_165.6	165.6	3.8	4.2	3.8	4.2	3.7	4.2	3.6	4.6	18	20	17	22
F 51 3_202.4	202.4	3.5	4.0	3.5	4.0	3.5	4.0	3.3	4.3	18	20	17	22
F 51 3_216.9	216.9	3.5	3.9	3.5	3.9	3.4	3.9	3.3	4.3	—	—	—	—
F 51 3_239.8	239.8	3.4	3.9	3.4	3.9	3.4	3.9	3.2	4.2	—	—	—	—
F 51 3_262.1	262.1	3.4	3.8	3.4	3.8	3.3	3.8	3.2	4.2	—	—	—	—
F 51 3_285.9	285.9	3.3	3.7	3.3	3.7	3.2	3.7	3.1	4.1	—	—	—	—
F 51 3_317.3	317.3	3.2	3.6	3.2	3.6	3.2	3.7	3.0	4.0	—	—	—	—
F 51 3_352.5	352.5	3.1	3.5	3.1	3.5	3.1	3.6	3.0	4.0	—	—	—	—
F 51 4_429.1	429.1	—	—	3.2	3.6	3.1	3.6	3.0	4.0	—	—	—	—
F 51 4_530.5	530.5	—	—	3.2	3.6	3.1	3.6	3.0	4.0	—	—	—	—
F 51 4_676.3	676.3	—	—	3.1	3.6	3.1	3.6	2.9	3.9	—	—	—	—
F 51 4_826.4	826.4	—	—	3.1	3.5	3.0	3.5	2.9	3.9	—	—	—	—
F 51 4_885.5	885.5	—	—	3.1	3.5	3.0	3.5	2.9	3.9	—	—	—	—
F 51 4_979.4	979.4	—	—	3.1	3.5	3.0	3.5	2.9	3.9	—	—	—	—
F 51 4_1070	1070	—	—	3.1	3.5	3.0	3.5	2.9	3.9	—	—	—	—
F 51 4_1168	1168	—	—	3.1	3.5	3.0	3.5	2.9	3.9	—	—	—	—
F 51 4_1296	1296	—	—	3.1	3.5	3.0	3.5	2.9	3.9	—	—	—	—
F 51 4_1439	1439	—	—	3.1	3.5	3.0	3.5	2.9	3.9	—	—	—	—

F 60

	i	**J** (•10^{-4}) [kgm^2]										
		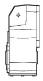	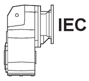 IEC									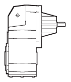
			63	**71**	**80**	**90**	**100**	**112**	**132**	**160**	**180**	
F 60 3_9.0	9.0	40	—	—	—	—	—	—	59	118	116	61
F 60 3_9.7	9.7	38	—	—	—	—	—	—	57	116	114	59
F 60 3_11.8	11.8	25	—	—	28	28	29	29	44	103	101	46
F 60 3_12.7	12.7	24	—	—	27	27	28	28	43	102	100	45
F 60 3_14.5	14.5	18	—	—	21	20	22	22	37	96	94	39
F 60 3_15.7	15.7	17	—	—	20	20	21	21	36	95	93	38
F 60 3_19.1	19.1	10	—	—	13	13	14	14	29	89	86	31
F 60 3_20.7	20.7	9.9	—	—	13	13	14	14	29	88	86	31
F 60 3_23.5	23.5	7.3	—	—	10	10	11	11	26	86	83	28
F 60 3_25.4	25.4	7.1	—	—	9.9	9.9	11	11	26	85	83	28
F 60 3_29.6	29.6	15	—	—	—	—	—	—	34	93	91	36
F 60 3_32.1	32.1	15	—	—	—	—	—	—	34	93	91	36
F 60 3_38.8	38.8	11	—	—	14	13	15	15	30	89	87	32
F 60 3_42.1	42.1	11	—	—	13	13	15	15	29	89	87	31
F 60 3_47.8	47.8	8.2	—	—	11	11	12	12	27	86	84	29
F 60 3_51.8	51.8	8.1	—	—	11	11	12	12	27	86	84	29
F 60 3_63.0	63.0	4.9	—	—	7.7	7.6	8.9	8.9	24	83	81	26
F 60 3_68.3	68.3	4.8	—	—	7.7	7.6	8.9	8.9	24	83	81	26
F 60 3_77.6	77.6	3.7	—	—	6.6	6.5	7.8	7.8	23	82	80	25
F 60 3_84.0	84.0	3.7	—	—	6.5	6.5	7.8	7.8	23	82	80	25
F 60 3_98.2	98.2	2.7	4.2	4.2	5.6	5.5	6.8	6.8	22	81	79	24
F 60 3_106.4	106.4	2.7	4.2	4.2	5.5	5.4	6.8	6.8	22	81	79	24
F 60 3_120.5	120.5	1.8	3.2	3.2	4.6	4.6	5.9	5.9	21	80	78	23
F 60 3_130.5	130.5	1.8	3.2	3.2	4.6	4.6	5.8	5.8	21	80	78	23
F 60 3_150.4	150.4	1.3	2.7	2.7	4.1	4.1	5.4	5.4	20	80	77	22
F 60 3_162.9	162.9	1.3	2.7	2.7	4.1	4.1	5.4	5.4	20	80	77	22
F 60 3_185.9	185.9	0.90	2.4	2.4	3.8	3.7	5.0	5.0	20	79	77	22
F 60 3_201.4	201.4	0.90	2.4	2.4	3.8	3.7	5.0	5.0	20	79	77	22
F 60 3_217.6	217.6	0.70	2.2	2.2	3.6	3.5	4.8	4.8	—	—	—	22
F 60 3_235.8	235.8	0.70	2.2	2.2	3.6	3.5	4.8	4.8	—	—	—	22
F 60 3_259.1	259.1	0.50	2.0	2.0	3.4	3.3	4.6	4.6	—	—	—	22
F 60 3_280.7	280.7	0.50	2.0	2.0	3.4	3.3	4.6	4.6	—	—	—	22

Im Hinblick auf die Trägheitsmomente der 4-stufigen Getriebe verweisen wir auf unseren Technischen Dienst.

F 60

	i	J (•10^{-4}) [kgm^2]									
		SERVO									
		95A		80C 95B 110A		95C 110B 130A		130B 180A		180B	
		SK	SC	SK	SC	SK	SC	SK	SC	SK	SC
F 60 3_9.0	9.0	—	—	—	—	—	—	57	59	59	64
F 60 3_9.7	9.7	—	—	—	—	—	—	55	57	57	62
F 60 3_11.8	11.8	—	—	28	29	28	29	42	44	44	49
F 60 3_12.7	12.7	—	—	27	28	27	28	41	43	43	48
F 60 3_14.5	14.5	—	—	21	22	20	21	35	37	37	42
F 60 3_15.7	15.7	—	—	20	21	20	21	34	36	36	41
F 60 3_19.1	19.1	—	—	13	14	13	14	27	29	29	34
F 60 3_20.7	20.7	—	—	13	14	13	14	27	29	29	34
F 60 3_23.5	23.5	—	—	10	11	10	11	24	27	26	31
F 60 3_25.4	25.4	—	—	9.9	10	9.9	11	24	27	26	31
F 60 3_29.6	29.6	—	—	—	—	—	—	32	34	34	39
F 60 3_32.1	32.1	—	—	—	—	—	—	32	34	34	39
F 60 3_38.8	38.8	—	—	14	15	13	14	28	30	30	35
F 60 3_42.1	42.1	—	—	13	14	13	14	28	30	29	34
F 60 3_47.8	47.8	—	—	11	12	11	12	25	28	27	32
F 60 3_51.8	51.8	—	—	11	12	11	12	25	28	27	32
F 60 3_63.0	63.0	—	—	7.7	8.2	7.6	8.6	22	24	24	29
F 60 3_68.3	68.3	—	—	7.7	8.2	7.6	8.6	22	24	24	29
F 60 3_77.6	77.6	—	—	6.6	7.1	6.5	7.5	21	23	23	28
F 60 3_84.0	84.0	—	—	6.5	7.0	6.5	7.5	21	23	23	28
F 60 3_98.2	98.2	—	—	5.6	6.1	5.5	6.5	20	22	22	27
F 60 3_106.4	106.4	5.5	6.0	5.5	6.0	5.4	6.4	20	22	22	27
F 60 3_120.5	120.5	2.2	2.7	4.6	5.1	4.6	5.6	19	21	21	26
F 60 3_130.5	130.5	2.2	2.7	4.6	5.1	4.6	5.6	19	21	21	26
F 60 3_150.4	150.4	4.1	4.6	4.1	4.6	4.1	5.1	18	21	20	25
F 60 3_162.9	162.9	4.1	4.6	4.1	4.6	4.1	5.1	18	21	20	25
F 60 3_185.9	185.9	3.7	4.2	3.8	4.3	3.7	4.7	18	20	20	25
F 60 3_201.4	201.4	3.7	4.2	3.8	4.3	3.7	4.7	18	20	20	25
F 60 3_217.6	217.6	3.5	4.0	3.6	4.1	3.5	4.5	—	—	—	—
F 60 3_235.8	235.8	3.5	4.0	3.6	4.1	3.5	4.5	—	—	—	—
F 60 3_259.1	259.1	3.3	3.8	3.4	3.9	3.3	4.3	—	—	—	—
F 60 3_280.7	280.7	3.3	3.8	3.4	3.9	3.3	4.3	—	—	—	—

Im Hinblick auf die Trägheitsmomente der 4-stufigen Getriebe verweisen wir auf unseren Technischen Dienst.

F 70

	i	J (•10^{-4}) [kgm^2]									
		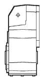	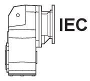								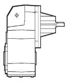
			80	**90**	**100**	**112**	**132**	**160**	**180**	**200**	
F 70 3_10.0	10.0	—	—	—	—	—	—	169	167	176	133
F 70 3_10.9	10.9	—	—	—	—	—	—	166	163	173	129
F 70 3_12.8	12.8	—	—	—	—	—	—	139	137	146	102
F 70 3_13.9	13.9	—	—	—	—	—	—	137	135	144	100
F 70 3_16.3	16.3	39	—	—	—	—	58	117	115	124	80
F 70 3_17.7	17.7	37	—	—	—	—	56	116	113	123	79
F 70 3_20.9	20.9	26	—	—	—	—	45	105	102	—	68
F 70 3_22.6	22.6	26	—	—	—	—	44	104	102	—	67
F 70 3_24.6	24.6	21	—	—	—	—	40	99	97	—	62
F 70 3_27.7	27.7	—	—	—	—	—	—	128	126	135	73
F 70 3_30.0	30.0	—	—	—	—	—	—	127	125	134	73
F 70 3_35.4	35.4	—	—	—	—	—	—	114	112	121	77
F 70 3_38.4	38.4	—	—	—	—	—	—	114	111	121	77
F 70 3_45.2	45.2	23	—	—	—	—	42	101	99	108	65
F 70 3_49.0	49.0	23	—	—	—	—	42	101	99	108	65
F 70 3_57.7	57.7	17	—	—	—	—	36	95	93	—	58
F 70 3_62.5	62.5	17	—	—	—	—	36	95	93	—	58
F 70 3_67.9	67.9	14	—	—	—	—	33	92	90	—	55
F 70 3_73.6	73.6	14	—	—	—	—	33	92	90	—	55
F 70 3_85.4	85.4	9.0	11	11	13	13	28	87	85	—	50
F 70 3_92.5	92.5	9.0	11	11	13	13	28	87	85	—	50
F 70 3_101.2	101.2	6.3	8.9	8.8	10	10	25	85	82	—	47
F 70 3_109.6	109.6	6.3	8.9	8.8	10	10	25	85	82	—	47
F 70 3_122.7	122.7	5.1	7.9	7.8	9.1	9.1	24	83	81	—	46
F 70 3_133.0	133.0	5.1	7.9	7.8	9.1	9.1	24	83	81	—	46
F 70 3_153.8	153.8	3.2	6.0	6.0	7.3	7.3	22	81	79	—	44
F 70 3_166.7	166.7	3.2	6.0	6.0	7.3	7.3	22	81	79	—	44
F 70 3_180.9	180.9	2.3	5.1	5.1	6.3	6.3	21	81	78	—	43
F 70 3_196.0	196.0	2.3	5.1	5.0	6.3	6.3	21	81	78	—	43

Im Hinblick auf die Trägheitsmomente der 4-stufigen Getriebe verweisen wir auf unseren Technischen Dienst.

F 80

	i	J (•10^{-4}) [kgm^2]										
		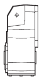	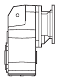 IEC									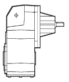
			80	**90**	**100**	**112**	**132**	**160**	**180**	**200**	**225**	
F 80 3_10.3	10.3	—	—	—	—	—	—	—	286	300	578	252
F 80 3_11.2	11.2	—	—	—	—	—	—	—	277	291	569	244
F 80 3_12.9	12.9	—	—	—	—	—	—	217	218	231	509	184
F 80 3_14.0	14.0	—	—	—	—	—	—	212	212	226	504	178
F 80 3_16.2	16.2	—	—	—	—	—	—	173	171	180	464	136
F 80 3_17.6	17.6	—	—	—	—	—	—	170	167	177	461	133
F 80 3_20.3	20.3	60	—	—	—	—	79	139	136	146	431	102
F 80 3_22.0	22.0	58	—	—	—	—	77	136	134	143	429	100
F 80 3_25.2	25.2	43	—	—	—	—	62	121	119	150	413	84
F 80 3_28.8	28.8	—	—	—	—	—	—	—	189	203	480	155
F 80 3_31.3	31.3	—	—	—	—	—	—	—	188	201	479	154
F 80 3_36.0	36.0	—	—	—	—	—	—	155	155	169	447	121
F 80 3_39.0	39.0	—	—	—	—	—	—	154	154	168	446	121
F 80 3_45.3	45.3	—	—	—	—	—	—	133	132	141	425	97
F 80 3_49.1	49.1	—	—	—	—	—	—	133	131	140	425	97
F 80 3_56.7	56.7	35	—	—	—	—	54	113	111	120	406	77
F 80 3_61.5	61.5	35	—	—	—	—	54	113	111	120	406	76
F 80 3_70.4	70.4	27	—	—	—	—	46	105	103	133	397	68
F 80 3_76.3	76.3	27	—	—	—	—	45	105	103	133	396	68
F 80 3_85.2	85.2	20	—	—	—	—	39	99	96	126	389	62
F 80 3_92.3	92.3	20	—	—	—	—	39	99	96	126	389	61
F 80 3_105.0	105.0	14	16	16	17	17	32	92	90	119	383	55
F 80 3_113.8	113.8	14	16	16	17	17	32	92	90	119	382	55
F 80 3_122.5	122.5	13	15	15	17	17	32	91	89	118	381	54
F 80 3_132.7	132.7	13	15	15	16	16	31	91	89	118	381	54
F 80 3_147.9	147.9	8.5	11	11	13	13	27	87	85	—	—	50
F 80 3_160.2	160.2	8.5	11	11	13	13	27	87	84	—	—	50
F 80 3_184.6	184.6	5.1	7.9	7.8	9.1	9.1	24	83	81	—	—	46
F 80 3_200.0	200.0	5.0	7.9	7.8	9.1	9.1	24	83	81	—	—	46

Im Hinblick auf die Trägheitsmomente der 4-stufigen Getriebe verweisen wir auf unseren Technischen Dienst.

F 90

	i	J (•10^{-4}) [kgm^2]											
		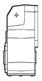	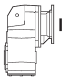 IEC										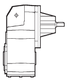
			80	90	100	112	132	160	180	200	225	250	
F 90 3_10.3	10.3	—	—	—	—	—	—	—	549	559	843	870	850
F 90 3_11.1	11.1	—	—	—	—	—	—	—	529	539	823	850	830
F 90 3_13.4	13.4	—	—	—	—	—	—	—	373	383	667	694	674
F 90 3_14.5	14.5	—	—	—	—	—	—	—	361	371	655	682	662
F 90 3_16.5	16.5	—	—	—	—	—	—	—	286	296	580	607	587
F 90 3_17.9	17.9	—	—	—	—	—	—	—	278	288	572	599	579
F 90 3_20.6	20.6	—	—	—	—	—	—	224	222	232	516	542	513
F 90 3_22.3	22.3	—	—	—	—	—	—	220	217	227	511	537	508
F 90 3_25.4	25.4	103	—	—	—	—	122	181	179	188	474	500	471
F 90 3_28.6	28.6	—	—	—	—	—	—	—	291	301	585	613	593
F 90 3_31.0	31.0	—	—	—	—	—	—	—	289	299	583	610	590
F 90 3_37.4	37.4	—	—	—	—	—	—	—	222	232	516	543	523
F 90 3_40.5	40.5	—	—	—	—	—	—	—	220	230	514	541	521
F 90 3_46.1	46.1	—	—	—	—	—	—	—	186	196	480	507	487
F 90 3_49.9	49.9	—	—	—	—	—	—	—	185	195	479	506	486
F 90 3_57.3	57.3	—	—	—	—	—	—	161	158	168	452	479	450
F 90 3_62.1	62.1	—	—	—	—	—	—	160	158	167	451	478	449
F 90 3_70.8	70.8	61	—	—	—	—	80	139	137	146	432	458	429
F 90 3_76.7	76.7	60	—	—	—	—	79	139	136	146	431	458	429
F 90 3_88.4	88.4	44	—	—	—	—	63	123	120	151	414	441	412
F 90 3_95.8	95.8	44	—	—	—	—	63	122	120	151	414	441	412
F 90 3_103.3	103.3	41	—	—	—	—	59	119	117	146	410	436	408
F 90 3_111.9	111.9	40	—	—	—	—	59	119	116	146	409	436	407
F 90 3_126.8	126.8	26	29	29	30	30	45	105	102	132	395	422	393
F 90 3_137.3	137.3	26	29	29	30	30	45	104	102	132	395	422	393
F 90 3_150.3	150.3	21	24	24	25	25	40	100	97	127	390	417	388
F 90 3_162.8	162.8	21	24	24	25	25	40	100	97	127	390	417	388
F 90 3_179.2	179.2	14	16	16	18	18	33	92	90	—	—	—	381
F 90 3_194.2	194.2	14	16	16	17	17	33	92	90	—	—	—	381

Im Hinblick auf die Trägheitsmomente der 4-stufigen Getriebe verweisen wir auf unseren Technischen Dienst.

63 EXAKTE ÜBERSETZUNG

i_N	F 10	F 20	F 25	F 31	F 41	F 51	F 60	F 70	F 80	F 90
6.3		6.41210								
7.1	7.40443		6.86957	6.94907	6.72727	7.19408				
8.0		7.83478	8.39375	8.22917						
9.0	8.58204	8.73227	9.35526	9.01630	9.13580	9.05114	8.96000			
10.0	9.76974	10.03069	10.62451	10.74747			9.70667	10.01538	10.33846	10.26577
11.2	11.53759	11.23370			10.77273	11.11005	11.75320	10.85000	11.20000	11.12125
12.5	13.02632		12.98182	12.72727		13.97796	12.73263	12.81731	12.90240	13.41346
14.0	14.64777	14.79842	14.46890	13.94466	14.62963		14.47385	13.88542	13.97760	14.53125
16.0	16.97738		16.62032	16.80000	17.11667		15.68000	16.34455	16.24615	16.52538
18.0		18.08182	18.61364	18.48804	18.89130	18.82155	19.06872	17.70660	17.60000	17.90250
20.0	19.32692	20.15311	21.81818	21.11230			20.65778	20.86538	20.33231	20.56731
22.4	22.82418	23.14973	23.75758	23.38636		23.79447	23.46381	22.60417	22.02667	22.28125
25.0	25.76923	25.92614	27.20455	27.27273	24.11579		25.41913	24.55695	25.22585	25.38622
28.0	29.63462	30.38961	30.03636	30.12121	30.11875	30.03828	29.61538	27.69231	28.84615	28.61169
31.5	32.98462	33.09091	32.18182	34.36364			32.08333	30.00000	31.25000	30.99600
35.5	35.34066	37.89205	36.41958	37.67273	38.18333	37.13636	38.84771	35.43956	36.00000	37.38462
40.0	39.64497	41.83636	40.72727	40.36364			42.08502	38.39286	39.00000	40.50000
45.0	44.66667	44.82468	45.56607	44.64336	47.92667		47.84024	45.19231	45.32967	46.05785
50.0	48.72727	50.72727	50.78571	47.54630	51.49270	48.89965	51.82692	48.95833	49.10714	49.89600
56.0	56.69231	56.72727	58.33718	52.09420	60.24646		63.02761	57.69231	56.73077	57.32308
63.0	62.99145	61.88430	65.33371	62.76111	66.49275	65.84416	68.27991	62.50000	61.45833	62.10000
71.0	71.12308	69.13636	76.58163	69.06725			77.55467	73.55769	70.38462	70.75385
80.0	81.31624	76.81818	83.38889	78.87092	84.88166	83.24111	84.01756	85.38462	76.25000	76.65000
90.0	91.48077	90.40909	95.48772	87.36632			98.19838	92.50000	92.30769	88.39385
100.0	106.02198	101.63636	105.42738	101.88492	106.01061	105.08407	106.38158	101.18343	105.00000	103.33491
112.2		114.34091	112.95791	112.52623			120.45488	109.61538	113.75000	111.94615
125.5	127.12821	132.19481	127.83242	128.37500	134.39596	129.91558	130.49279	122.72727	122.48521	126.77538
140.0		156.30469	142.95238	140.73704			150.35503	132.95455	132.69231	150.30533
160.0		172.57500	155.94805	166.77778	168.69010	165.62338	162.88462	166.66667	160.22727	162.83077
180.0		184.90179	174.22321	185.43056	180.73939	202.39481	185.89349	180.94406	184.61538	179.21958
200.0		209.25000	193.58135	202.28788	198.92028	216.85158	201.38462	196.02273	200.00000	194.15455
225.0		234.00000	227.83036	228.22222	220.13131	239.84416	217.64679	216.52422	218.49174	213.59178
250.0		255.27273	256.12302	253.58025	240.14325	262.11039	259.08284	234.56790	273.89277	231.39109
280.0		285.18750	288.13839	293.83611	266.93818	285.93861	280.67308	280.93645	296.71717	268.72770
315.0		316.87500	333.13010	332.82407	296.59798	317.26753	315.38899	304.34783	353.67893	291.12168
355.0		372.93750		374.42708	344.79515	352.51948	341.67140	372.46964	383.15217	361.84615
400.0		419.25000	393.88686	418.86023		429.09330	399.34008	403.50877	451.49061	392.00000
450.0		471.65625	434.88795	462.60785	433.67975		432.61842	471.15385	489.11483	457.45099
500.0			465.95137	527.76389			489.84985	510.41667	563.87675	495.57191
560.0		545.30357	527.30872	578.58560	549.80165	530.48864	530.67067	606.83761	610.86648	577.48888
630.0			589.67857	619.91314	690.09587	676.29545	611.44379	657.40741	714.86014	625.61296
710.0			643.28571	685.64198	739.38843	826.44545	755.96686	758.97436	774.43182	713.95030
800.0			718.67076	762.32562	813.76478	885.47727	818.96410	822.22222	897.27273	773.44615
900.0			798.52307	831.62795	900.53719	979.36364	885.09695	899.40828	972.04545	910.18225
1000.0			939.80022	938.24691	982.40421	1070.28409	958.85503	974.35897	1058.06885	986.03077
1125.0			1056.50744	1042.49657	1092.01983	1167.58264	1053.60355	1090.90909	1146.24126	1112.25941
1250.0			1188.57087	1207.99290	1213.35537	1295.50909	1141.40385	1181.81818	1277.33630	1204.94769
1400.0			1374.16167	1368.27675	1410.52562	1439.45455		1367.52137	1383.78099	1427.90059
1600.0				1539.31134				1584.61538	1577.62238	1571.37386
1800.0								1716.66667	1709.09091	1702.32168
2000.0								2019.23077	1833.98601	1937.26864
2250.0								2187.50000	1986.81818	2098.70769

▨ 2x   ▨ 3x   ▨ 4x

64 ABMESSUNGEN

F 10...M

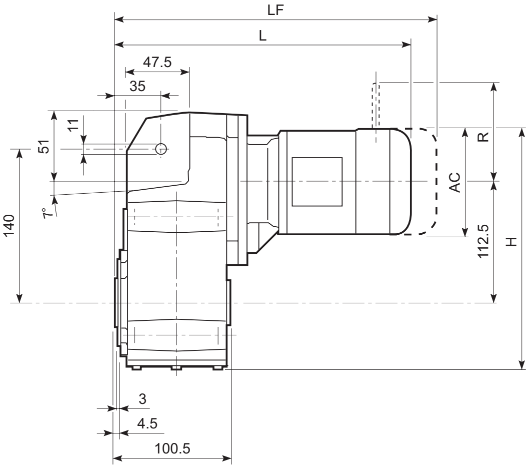

LF
L
47.5
35
11
51
140
7°
R
AC
112.5
H
3
4.5
100.5

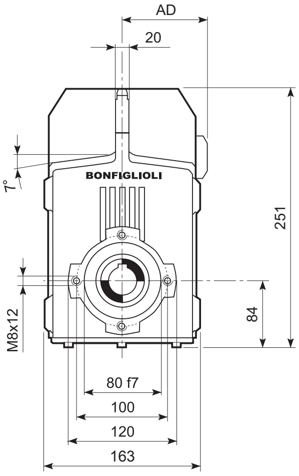

AD
20
7°
BONFIGLIOLI
251
M8x12
84
80 f7
100
120
163

								M...FD M...FA		M...FD		M...FA	
			AC	H	L	AD	Kg	LF	Kg	R	AD	R	AD
F 10 2	**S05**	**M05**	121	220.5	311.5	95	12	377.5	13	96	122	116	95
F 10 2	**S1**	**M1**	138	265.5	340.5	108	14	401.5	17	103	135	124	108
F 10 2	**S2**	**M2S**	156	274.5	369.5	119	18	439.5	21	129	146	134	119
F 10 2	**S3**	**M3S**	195	294	412.5	142	22	508.5	30	160	158	160	142
F 10 2	**S3**	**M3L**	195	294	444.5	142	24	535.5	31	160	158	160	142

F 10...P(IEC)

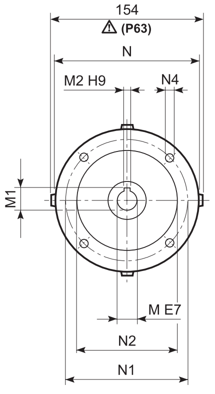
154
⚠ (P63)
N
M2 H9
N4
M1
M E7
N2
N1

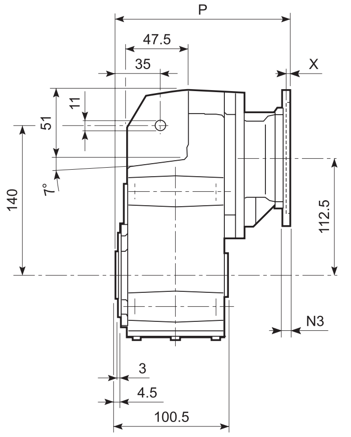
P
47.5
35
X
11
51
140
7°
112.5
N3
3
4.5
100.5

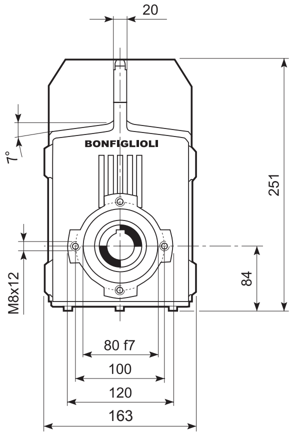
20
7°
BONFIGLIOLI
251
M8x12
84
80 f7
100
120
163

		M	M1	M2	N	N1	N2	N3	N4	X	P	Kg
F 10 2	**P63**	11	12.8	4	140	115	95	—	M8x19	4	185.5	8
F 10 2	**P71**	14	16.3	5	160	130	110	—	M8x16	4.5	185.5	8
F 10 2	**P80**	19	21.8	6	200	165	130	—	M10x14.5	4	205	9
F 10 2	**P90**	24	27.3	8	200	165	130	—	M10x14.5	4	205	9
F 10 2	**P100**	28	31.3	8	250	215	180	—	M12x16	4.5	215	13
F 10 2	**P112**	28	31.3	8	250	215	180	—	M12x16	4.5	215	13

F 10...HS

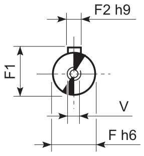
F2 h9
F1
V
F h6

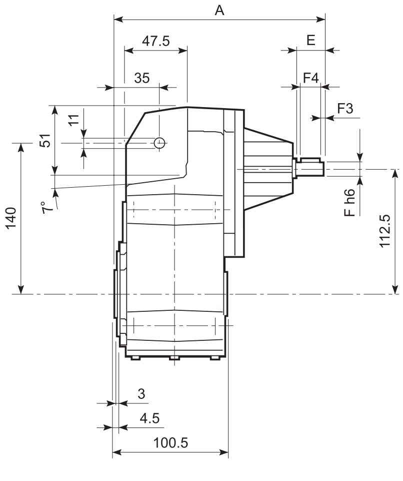
A
47.5
E
35
F4
F3
11
51
140
7°
F h6
112.5
3
4.5
100.5

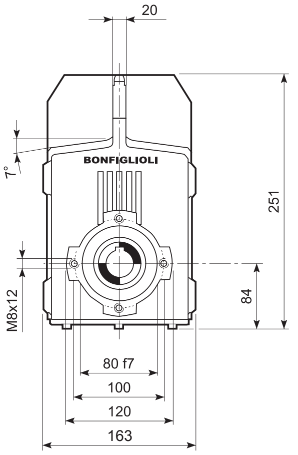
20
7°
BONFIGLIOLI
251
M8x12
84
80 f7
100
120
163

		A	E	F	F1	F2	F3	F4	V	Kg
F 10 2	**HS**	192	40	16	18	5	2.5	35	M6x16	7.5

F 10...SK / SC

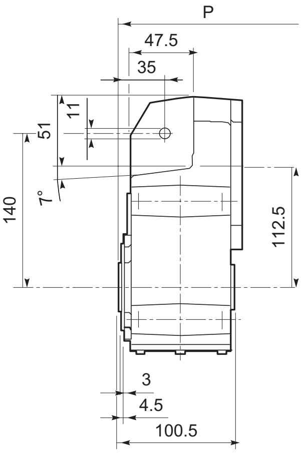

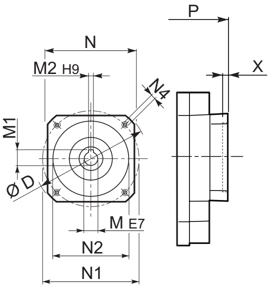

SK...

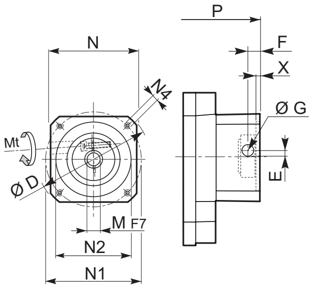

SC...

		D	M	M1	M2	N	N1	N2	N4	X	P	Kg
F 10 2	**SK 60A**	102	11	12.8	4	82	75	60	M5x10	3.5	157	8
F 10 2	**SK 60B**	102	14	16.3	5	82	75	60	M5x10	4	164	8
F 10 2	**SK 80A**	115	14	16.3	5	90	100	80	M6x12	4	164	8
F 10 2	**SK 80C**	120	19	21.8	6	96	100	80	M6x12	4	205	9
F 10 2	**SK 95A**	130	14	16.3	5	102	115	95	M8x12	4	205	9
F 10 2	**SK 95B**	130	19	21.8	6	102	115	95	M8x12	4	205	9
F 10 2	**SK 95C**	130	24	27.3	8	102	115	95	M8x12	4	205	9
F 10 2	**SK 110A**	150	19	21.8	6	120	130	110	M8x12	5	205	9
F 10 2	**SK 110B**	150	24	27.3	8	120	130	110	M8x12	5	205	9

			Mt [Nm]	D	E	F	G	M	N	N1	N2	N4	X	P	Kg
F 10 2	**SC 60A**	M6	15	102	7	12.5	12.5	11	82	75	60	M5x10	4	184	8
F 10 2	**SC 60B**	M6	15	102	7	12.5	12.5	14	82	75	60	M5x10	4	184	9
F 10 2	**SC 80A**	M6	15	115	6	12.5	12.5	14	90	100	80	M6x12	4	184	9
F 10 2	**SC 80C**	M6	15	120	15.5	14.5	17.75	19	96	100	80	M6x12	4	228.5	10
F 10 2	**SC 95A**	M6	15	130	16.5	15	17.75	14	102	115	95	M8x16	4	228.5	10
F 10 2	**SC 95B**	M6	15	130	16.5	15	17.75	19	102	115	95	M8x16	4	228.5	10
F 10 2	**SC 95C**	M6	15	130	16.5	15	17.75	24	102	115	95	M8x16	4	228.5	10
F 10 2	**SC 110A**	M6	15	150	16.5	16	17.75	19	120	130	110	M8x16	5	228.5	11
F 10 2	**SC 110B**	M6	15	150	16.5	16	17.75	24	120	130	110	M8x16	5	228.5	11

F 10

F 10...H

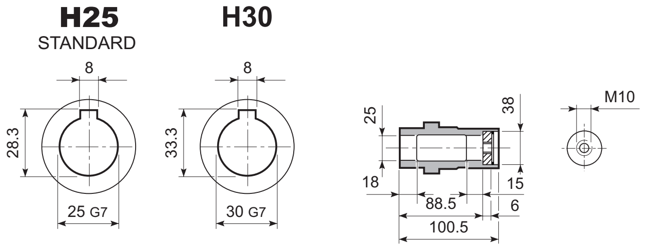
H25
STANDARD
H30
8
28.3
25 G7
8
33.3
30 G7
25
38
18
88.5
15
6
100.5
M10

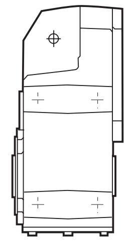

F 10...S

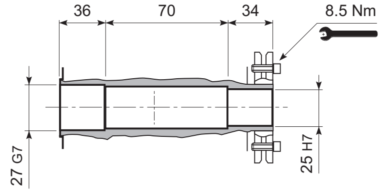
36
70
34
8.5 Nm
27 G7
25 H7

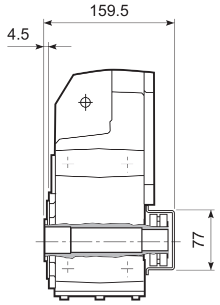

F 10...R

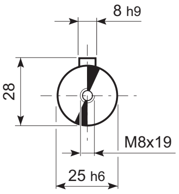
8 h9
28
M8x19
25 h6

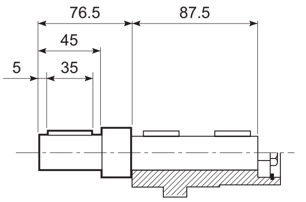
76.5
87.5
45
5
35

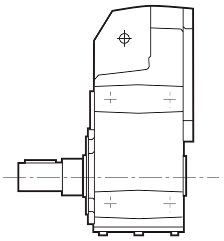

F 10...QF

	Ø
QF25	25
QF30	30

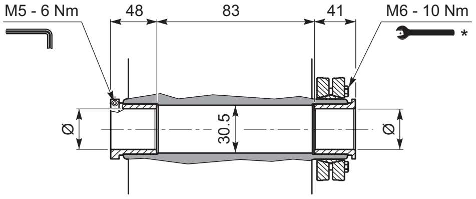
M5 - 6 Nm
48
83
41
M6 - 10 Nm
*
Ø
30.5
Ø

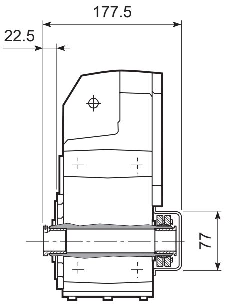

F 10...F...

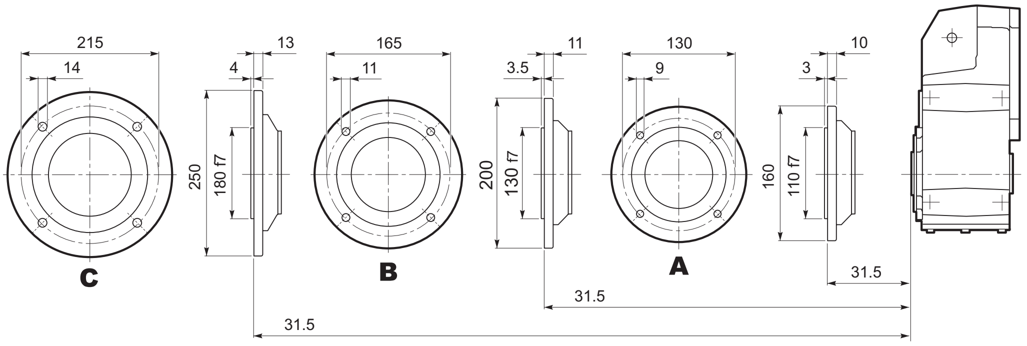
215
14
13
4
250
180 f7
C
165
11
11
3.5
200
130 f7
B
130
9
10
3
160
110 f7
A
31.5
31.5
31.5

* Befolgen Sie die MONTAGEANLEITUNG die dem Getriebe beiliegt.

F 20...M

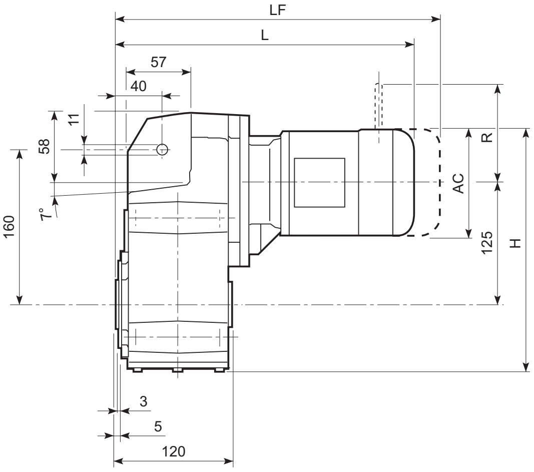
LF
L
57
40
11
58
160
7°
R
AC
125
H
3
5
120

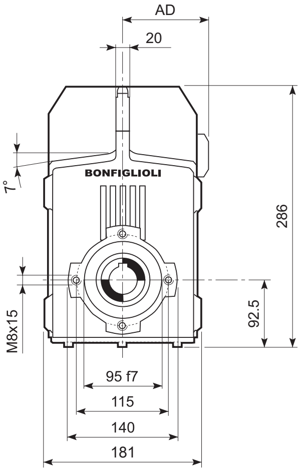
AD
20
7°
BONFIGLIOLI
286
M8x15
92.5
95 f7
115
140
181

								M...FD M...FA		M...FD		M...FA	
			AC	H	L	AD	Kg	LF	Kg	R	AD	R	AD
F 20 2	**S05**	**M05**	121	278.2	323.5	95	15	389.5	17	96	122	116	95
F 20 2	**S1**	**M1**	138	286.7	352.5	108	17	413.5	20	103	135	124	108
F 20 2	**S2**	**M2S**	156	295.7	381.5	119	21	451.5	25	129	146	134	119
F 20 2	**S3**	**M3S**	195	315.2	424.5	142	26	520.5	33	160	158	160	142
F 20 2	**S3**	**M3L**	195	315.2	456.5	142	31	547.5	38	160	158	160	142
F 20 3	**S05**	**M05**	121	278.2	379	95	17	445	18	96	122	116	95
F 20 3	**S1**	**M1**	138	286.7	408	108	19	469	21	103	135	124	108
F 20 3	**S2**	**M2S**	156	295.7	437	119	22	507	26	129	146	134	119
F 20 3	**S3**	**M3S**	195	315.2	480	142	27	576	34	160	158	160	142
F 20 3	**S3**	**M3L**	195	315.2	512	142	32	603	39	160	158	160	142

F 20...P(IEC)

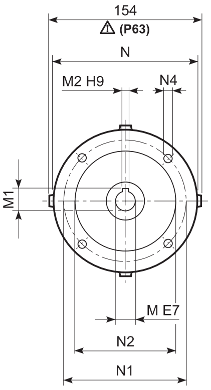

154
⚠ (P63)
N
M2 H9
N4
M1
M E7
N2
N1

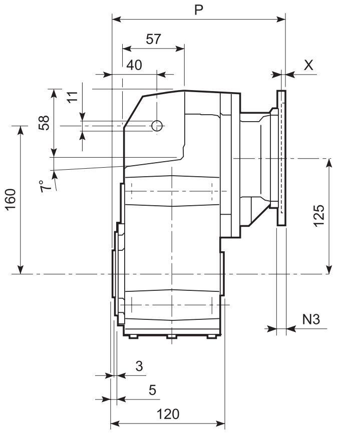

P
57
40
X
11
58
7°
160
125
N3
3
5
120

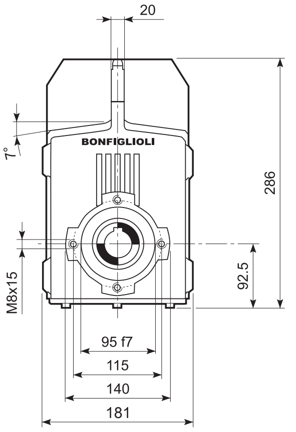

20
7°
BONFIGLIOLI
286
M8x15
92.5
95 f7
115
140
181

		M	M1	M2	N	N1	N2	N3	N4	X	P	Kg
F 20 2	**P63**	11	12.8	4	140	115	95	—	M8x19	4	197.5	12
F 20 2	**P71**	14	16.3	5	160	130	110	—	M8x16	4.5	197.5	12
F 20 2	**P80**	19	21.8	6	200	165	130	—	M10x14.5	4	217	13
F 20 2	**P90**	24	27.3	8	200	165	130	—	M10x14.5	4	217	12
F 20 2	**P100**	28	31.3	8	250	215	180	—	M12x16	4.5	227	16
F 20 2	**P112**	28	31.3	8	250	215	180	—	M12x16	4.5	227	16
F 20 3	**P63**	11	12.8	4	140	115	95	—	M8x19	4	253	13
F 20 3	**P71**	14	16.3	5	160	130	110	—	M8x16	4.5	253	13
F 20 3	**P80**	19	21.8	6	200	165	130	—	M10x14.5	4	272.5	14
F 20 3	**P90**	24	27.3	8	200	165	130	—	M10x14.5	4	272.5	14
F 20 3	**P100**	28	31.3	8	250	215	180	—	M12x16	4.5	282.5	18
F 20 3	**P112**	28	31.3	8	250	215	180	—	M12x16	4.5	282.5	18

F 20...HS

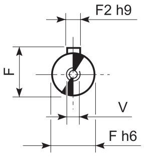

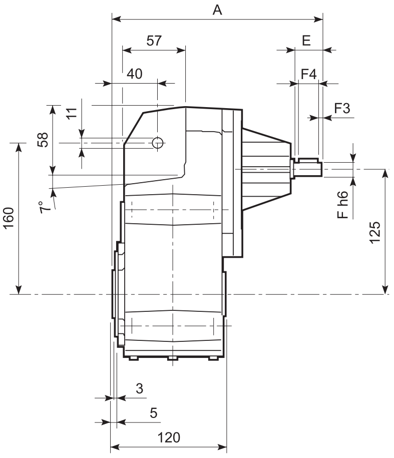

A
57
E
40
F4
F3
11
58
7°
160
F h6
125
3
5
120

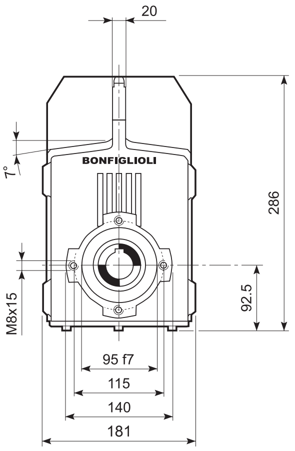

20
7°
BONFIGLIOLI
286
M8x15
92.5
95 f7
115
140
181

		A	E	F	F1	F2	F3	F4	V	Kg
F 20 2	**HS**	247.5	40	19	21.5	6	2.5	35	M6x16	11.5
F 20 3		260	40	16	18	5	2.5	35	M6x16	12.4

F 20...SK / SC

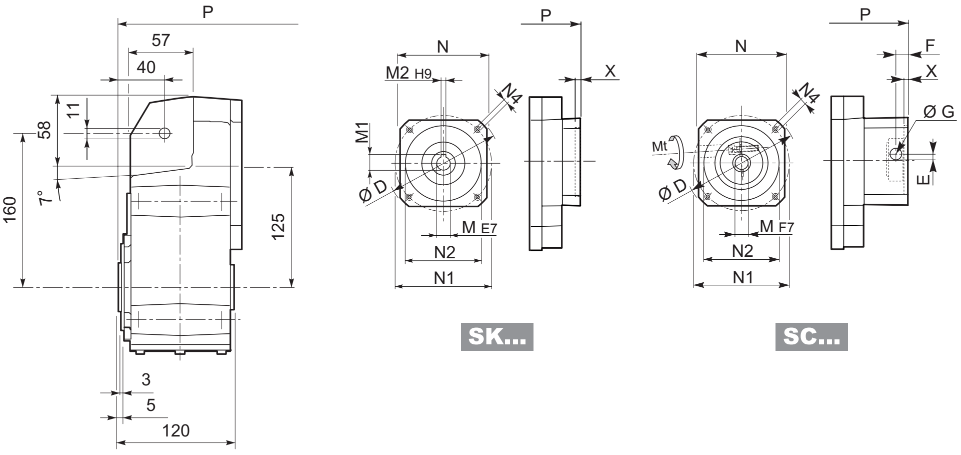

											2x		3x	
		D	M	M1	M2	N	N1	N2	N4	X	P	Kg	P	Kg
F 20 2/3	**SK 60A**	102	11	12.8	4	82	75	60	M5x10	3.5	169	11	224.5	12
F 20 2/3	**SK 60B**	102	14	16.3	5	82	75	60	M5x10	4	176	12	231.5	13
F 20 2/3	**SK 80A**	115	14	16.3	5	90	100	80	M6x12	4	217	12	231.5	13
F 20 2/3	**SK 80C**	120	19	21.8	6	96	100	80	M6x12	4	217	13	272.5	14
F 20 2/3	**SK 95A**	130	14	16.3	5	102	115	95	M8x12	4	217	13	272.5	14
F 20 2/3	**SK 95B**	130	19	21.8	6	102	115	95	M8x12	4	217	13	272.5	14
F 20 2/3	**SK 95C**	130	24	27.3	8	102	115	95	M8x12	4	217	13	272.5	14
F 20 2/3	**SK 110A**	150	19	21.8	6	120	130	110	M8x12	5	217	13	272.5	14
F 20 2/3	**SK 110B**	150	24	27.3	8	120	130	110	M8x12	5	217	13	272.5	14

														2x		3x	
			Mt [Nm]	D	E	F	G	M	N	N1	N2	N4	X	P	Kg	P	Kg
F 20 2/3	**SC 60A**	M6	15	102	7	12.5	12.5	11	82	75	60	M5x10	4	196	12	251.5	13
F 20 2/3	**SC 60B**	M6	15	102	7	12.5	12.5	14	82	75	60	M5x10	4	196	13	251.5	14
F 20 2/3	**SC 80A**	M6	15	115	6	12.5	12.5	14	90	100	80	M6x12	4	196	13	251.5	14
F 20 2/3	**SC 80C**	M6	15	120	15.5	14.5	17.75	19	96	100	80	M6x12	4	240.5	14	296	15
F 20 2/3	**SC 95A**	M6	15	130	16.5	15	17.75	14	102	115	95	M8x16	4	240.5	14	296	15
F 20 2/3	**SC 95B**	M6	15	130	16.5	15	17.75	19	102	115	95	M8x16	4	240.5	14	296	15
F 20 2/3	**SC 95C**	M6	15	130	16.5	15	17.75	24	102	115	95	M8x16	4	240.5	14	296	15
F 20 2/3	**SC 110A**	M6	15	150	16.5	16	17.75	19	120	130	110	M8x16	5	240.5	15	296	16
F 20 2/3	**SC 110B**	M6	15	150	16.5	16	17.75	24	120	130	110	M8x16	5	240.5	15	296	16

F 20

F 20...H

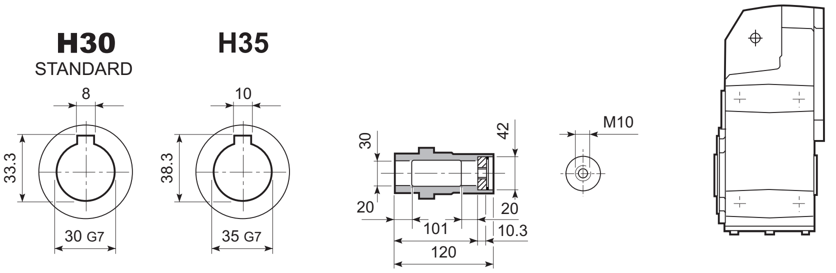
H30
STANDARD
8
33.3
30 G7
H35
10
38.3
35 G7
30
42
20
101
20
10.3
120
M10

F 20...S

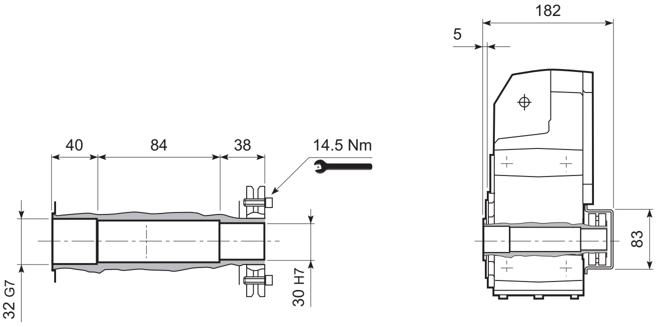
182
5
40
84
38
14.5 Nm
32 G7
30 H7
83

F 20...R

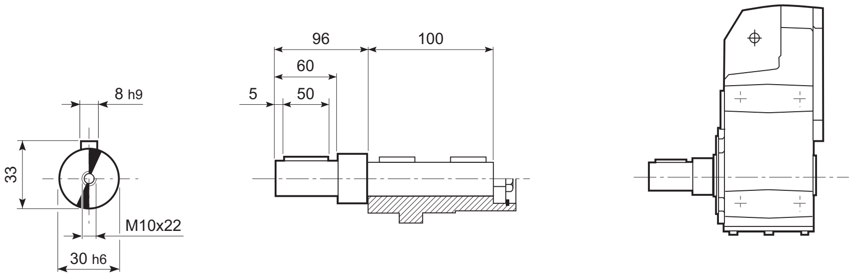
8 h9
33
M10x22
30 h6
96
100
60
5
50

F 20...QF

	Ø
QF25	25
QF30	30

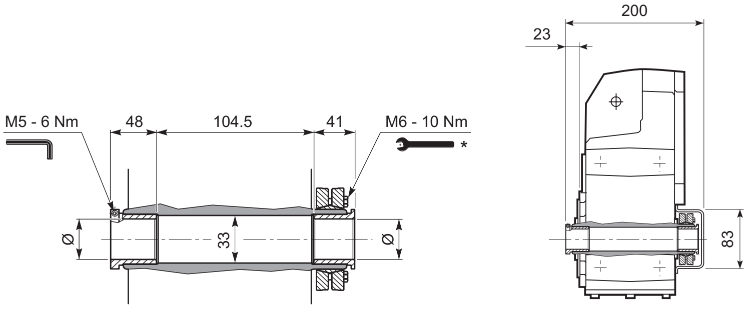
200
23
M5 - 6 Nm
48
104.5
41
M6 - 10 Nm
*
Ø
33
Ø
83

F 20...F...

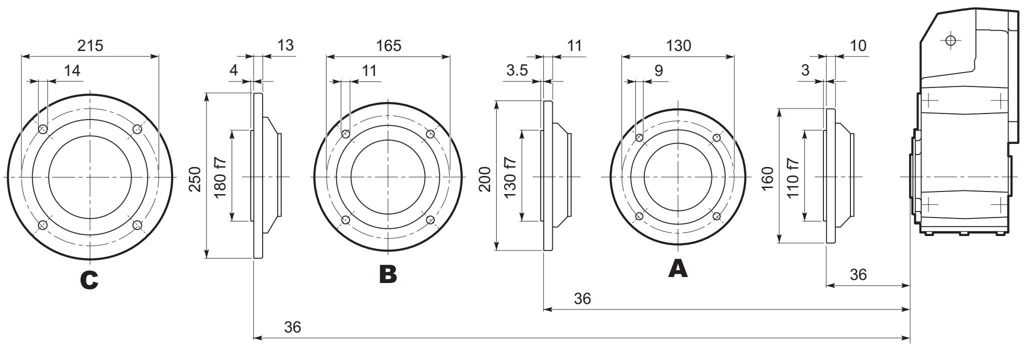
215
14
C
4
13
250
180 f7
165
11
B
3.5
11
200
130 f7
130
9
A
3
10
160
110 f7
36
36
36

* Befolgen Sie die MONTAGEANLEITUNG die dem Getriebe beiliegt.

F 25...M

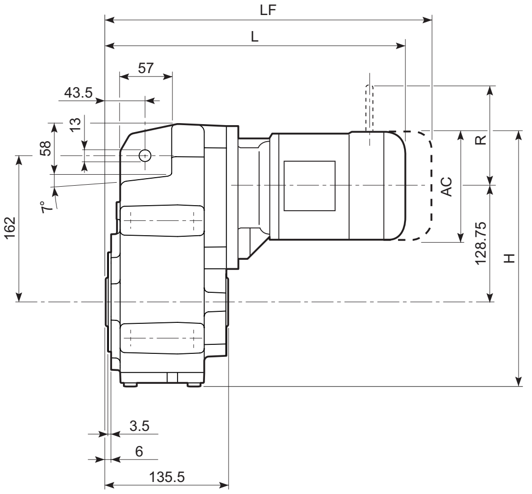
LF
L
57
43.5
13
58
7°
162
R
AC
128.75
H
3.5
6
135.5

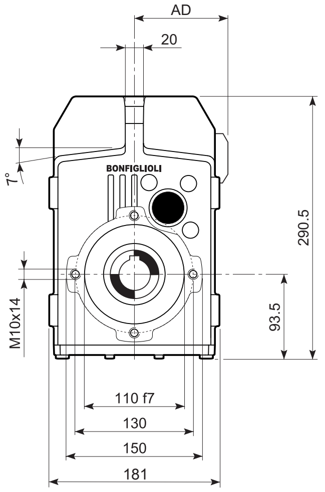
AD
20
BONFIGLIOLI
7°
M10x14
290.5
93.5
110 f7
130
150
181

								M...FD M...FA		M...FD		M...FA	
			AC	H	L	AD	Kg	LF	Kg	R	AD	R	AD
F 25 2/3	**S05**	**M05**	121	283	339	95	15	405	17	96	122	116	95
F 25 2/3	**S1**	**M1**	138	291.5	368	108	17	429	20	103	135	124	108
F 25 2/3	**S2**	**M2S**	156	300.5	397	119	21	467	25	129	146	134	119
F 25 2/3	**S3**	**M3S**	195	320	440	142	26	536	33	160	158	160	142
F 25 2/3	**S3**	**M3L**	195	320	472	142	31	563	38	160	158	160	142
F 25 4	**S05**	**M05**	121	283	394.5	95	17	460.5	18	96	122	116	95
F 25 4	**S1**	**M1**	138	291.5	423.5	108	19	484.5	21	103	135	124	108
F 25 4	**S2**	**M2S**	156	300.5	452.5	119	22	522.5	26	129	146	134	119
F 25 4	**S3**	**M3S**	195	320	495.5	142	27	591.5	34	160	158	160	142
F 25 4	**S3**	**M3L**	195	320	527.5	142	32	618.5	39	160	158	160	142

F 25...P(IEC)

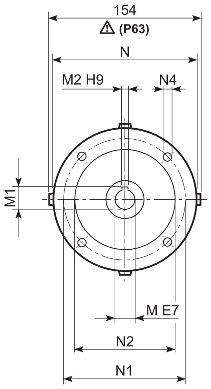
154
⚠ (P63)
N
M2 H9
N4
M1
M E7
N2
N1

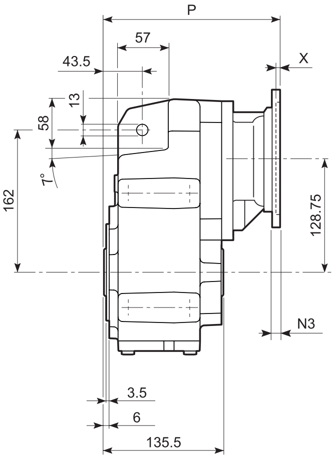
P
57
43.5
X
13
58
7°
162
128.75
N3
3.5
6
135.5

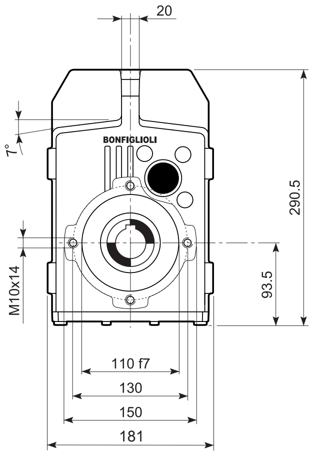
20
7°
BONFIGLIOLI
290.5
M10x14
93.5
110 f7
130
150
181

		M	M1	M2	N	N1	N2	N3	N4	X	P	Kg
F 25 2/3	**P63**	11	12.8	4	140	115	95	—	M8x19	4	213	12
F 25 2/3	**P71**	14	16.3	5	160	130	110	—	M8x16	4.5	213	12
F 25 2/3	**P80**	19	21.8	6	200	165	130	—	M10x14.5	4	232.5	13
F 25 2/3	**P90**	24	27.3	8	200	165	130	—	M10x14.5	4	232.5	13
F 25 2/3	**P100**	28	31.3	8	250	215	180	—	M12x16	4.5	242.5	16
F 25 2/3	**P112**	28	31.3	8	250	215	180	—	M12x16	4.5	242.5	16
F 25 4	**P63**	11	12.8	4	140	115	95	—	M8x19	4	268.5	13
F 25 4	**P71**	14	16.3	5	160	130	110	—	M8x16	4.5	268.5	13
F 25 4	**P80**	19	21.8	6	200	165	130	—	M10x14.5	4	288	14
F 25 4	**P90**	24	27.3	8	200	165	130	—	M10x14.5	4	288	14
F 25 4	**P100**	28	31.3	8	250	215	180	—	M12x16	4.5	298	18
F 25 4	**P112**	28	31.3	8	250	215	180	—	M12x16	4.5	298	18

F 25...HS

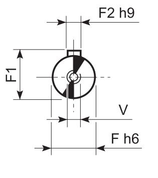
F2 h9
F1
V
F h6

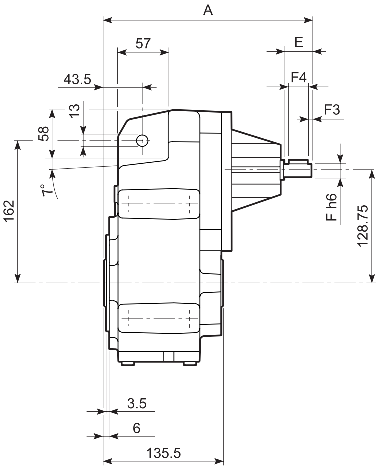
A
57
E
43.5
F4
F3
13
58
7°
162
F h6
128.75
3.5
6
135.5

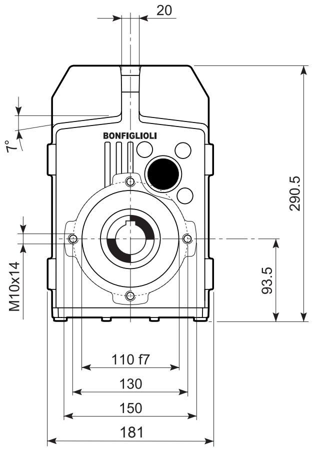
20
7°
BONFIGLIOLI
290.5
M10x14
93.5
110 f7
130
150
181

		A	E	F	F1	F2	F3	F4	V	Kg
F 25 2	**HS**	263	40	19	21.5	6	2.5	35	M6x16	11.5
F 25 3		263	40	19	21.5	6	2.5	35	M6x16	11.5
F 25 4		275.5	40	16	18	5	2.5	35	M6x16	12.5

F 25...SK / SC

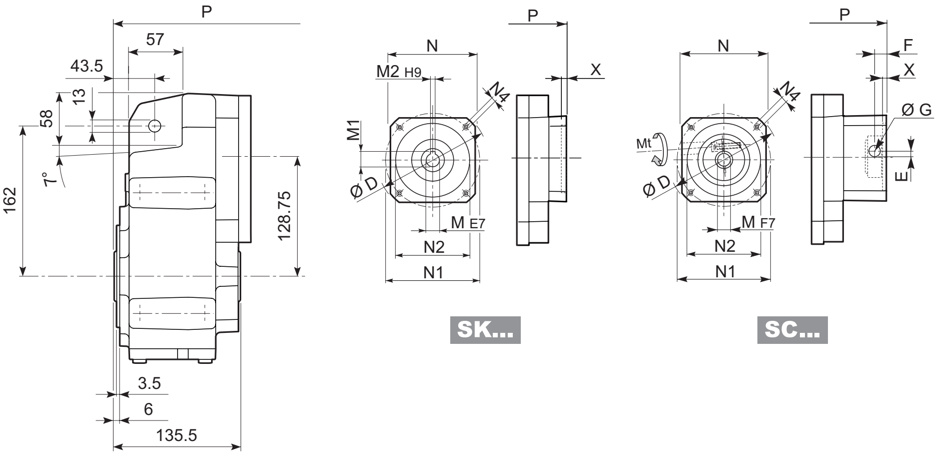

		D	M	M1	M2	N	N1	N2	N4	X	2/3x P	2/3x Kg	4x P	4x Kg
F 25 2/3/4	**SK 60A**	102	11	12.8	4	82	75	60	M5x10	3.5	184.5	11	240	12
F 25 2/3/4	**SK 60B**	102	14	16.3	5	82	75	60	M5x10	4	191.5	12	247	13
F 25 2/3/4	**SK 80A**	115	14	16.3	5	90	100	80	M6x12	4	191.5	12	247	13
F 25 2/3/4	**SK 80C**	120	19	21.8	6	96	100	80	M6x12	4	232.5	13	288	14
F 25 2/3/4	**SK 95A**	130	14	16.3	5	102	115	95	M8x12	4	232.5	13	288	14
F 25 2/3/4	**SK 95B**	130	19	21.8	6	102	115	95	M8x12	4	232.5	13	288	14
F 25 2/3/4	**SK 95C**	130	24	27.3	8	102	115	95	M8x12	4	232.5	13	288	14
F 25 2/3/4	**SK 110A**	150	19	21.8	6	120	130	110	M8x12	5	232.5	13	288	14
F 25 2/3/4	**SK 110B**	150	24	27.3	8	120	130	110	M8x12	5	232.5	13	288	14

			Mt [Nm]	D	E	F	G	M	N	N1	N2	N4	X	2/3x P	2/3x Kg	4x P	4x Kg
F 25 2/3/4	**SC 60A**	M6	15	102	7	12.5	12.5	11	82	75	60	M5x10	4	211.5	12	267	13
F 25 2/3/4	**SC 60B**	M6	15	102	7	12.5	12.5	14	82	75	60	M5x10	4	211.5	13	267	14
F 25 2/3/4	**SC 80A**	M6	15	115	6	12.5	12.5	14	90	100	80	M6x12	4	211.5	13	267	14
F 25 2/3/4	**SC 80C**	M6	15	120	15.5	14.5	17.75	19	96	100	80	M6x12	4	256	14	311.5	15
F 25 2/3/4	**SC 95A**	M6	15	130	16.5	15	17.75	14	102	115	95	M8x16	4	256	14	311.5	15
F 25 2/3/4	**SC 95B**	M6	15	130	16.5	15	17.75	19	102	115	95	M8x16	4	256	14	311.5	15
F 25 2/3/4	**SC 95C**	M6	15	130	16.5	15	17.75	24	102	115	95	M8x16	4	256	14	311.5	15
F 25 2/3/4	**SC 110A**	M6	15	150	16.5	16	17.75	19	120	130	110	M8x16	5	256	15	311.5	16
F 25 2/3/4	**SC 110B**	M6	15	150	16.5	16	17.75	24	120	130	110	M8x16	5	256	15	311.5	16

F 25

F 25...H

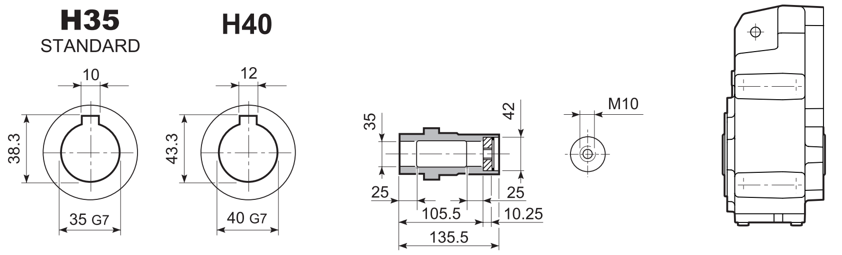
H35
STANDARD
H40
10
38.3
35 G7
12
43.3
40 G7
35
42
25
105.5
25
10.25
135.5
M10

F 25...S

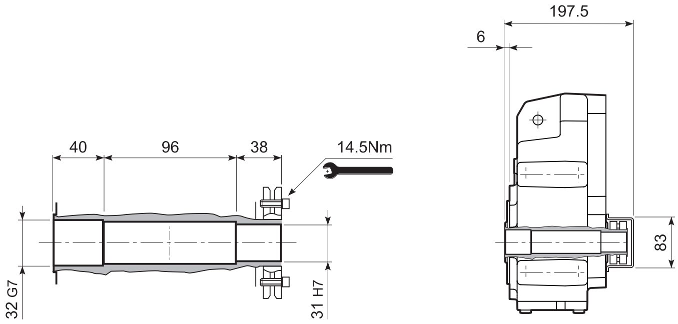
197.5
6
40
96
38
14.5Nm
32 G7
31 H7
83

F 25...R

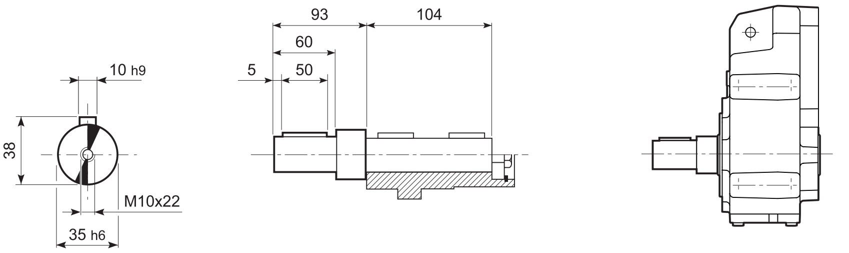
10 h9
38
M10x22
35 h6
93
104
60
5
50

F 25...QF

	Ø
QF30	30
QF32	32

$M_{n2\ max}$	[Nm]
F 25 QF30	350

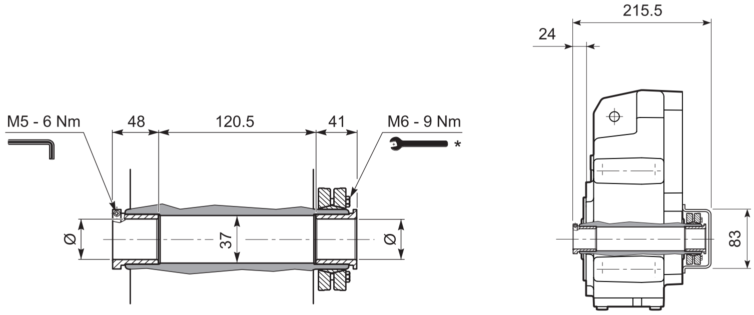
215.5
24
M5 - 6 Nm
48
120.5
41
M6 - 9 Nm
*
Ø
37
Ø
83

F 25...F...

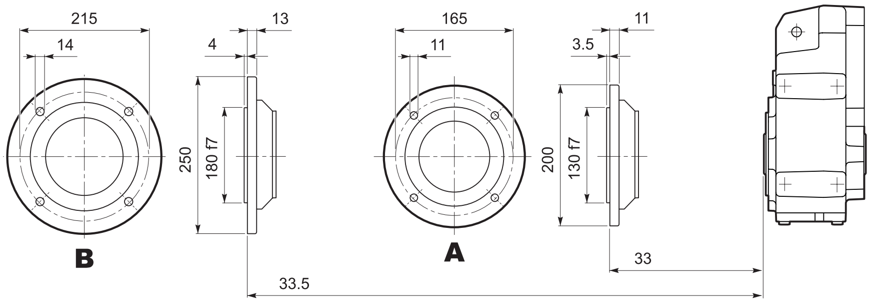
215
14
4
13
250
180 f7
B
165
11
3.5
11
200
130 f7
A
33
33.5

* Befolgen Sie die MONTAGEANLEITUNG die dem Getriebe beiliegt.

F 31...M

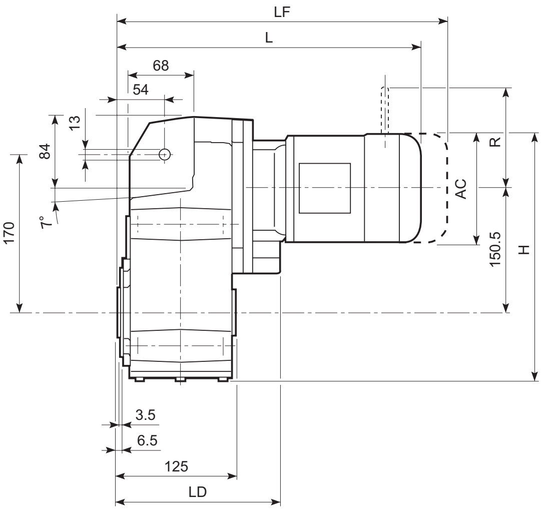
LF
L
68
54
13
84
170
7°
R
AC
150.5
H
3.5
6.5
125
LD

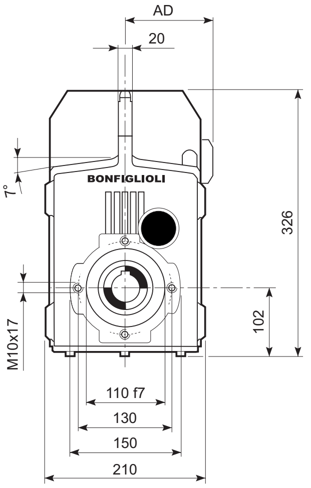
AD
20
7°
BONFIGLIOLI
326
M10x17
102
110 f7
130
150
210

									M...FD M...FA		M...FD		M...FA	
			AC	H	L	LD	AD	Kg	LF	Kg	R	AD	R	AD
F 31 2/3	**S1**	**M1**	138	321.3	380.5	183.5	108	22	441.5	25	103	135	124	108
F 31 2/3	**S2**	**M2S**	156	330.3	409.5	195.5	119	26	479.5	30	129	146	134	119
F 31 2/3	**S3**	**M3S**	195	349.8	452.5	205.5	142	31	548.5	38	160	158	160	142
F 31 2/3	**S3**	**M3L**	195	349.8	484.5	205.5	142	38	575.5	45	160	158	160	142
F 31 2/3	**S4**	**M4**	258	381.3	592.5	—	193	72	701.5	79	204	210	200	193
F 31 2/3	**S4**	**M4L**	258	381.3	592.5	—	193	78	701.5	85	204	210	200	193
F 31 4	**S05**	**M05**	121	312.8	409	—	95	20	475	22	96	122	116	95
F 31 4	**S1**	**M1**	138	321.3	438	—	108	22	499	25	103	135	124	108
F 31 4	**S2**	**M2S**	156	330.3	467	—	119	26	537	31	129	146	134	119
F 31 4	**S3**	**M3S**	195	349.8	510	—	142	31	606	39	160	158	160	142
F 31 4	**S3**	**M3L**	195	349.8	542	—	142	38	633	46	160	158	160	142

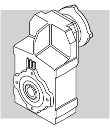

F 31...P(IEC)

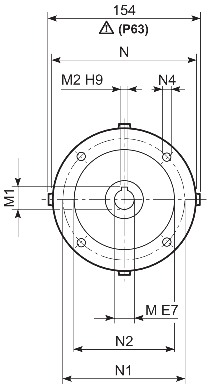
154
(P63)
N
M2 H9
N4
M1
M E7
N2
N1

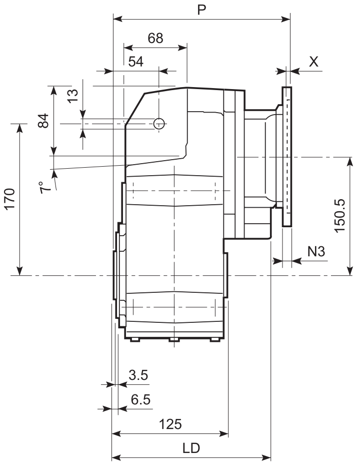
P
68
54
X
13
84
170
7°
150.5
N3
3.5
6.5
125
LD

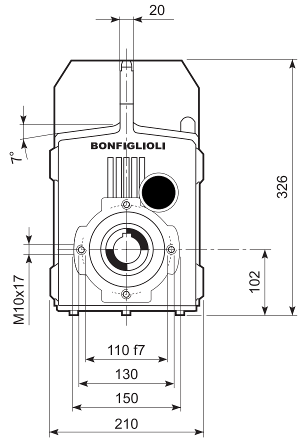
20
BONFIGLIOLI
7°
326
M10x17
102
110 f7
130
150
210

		LD	M	M1	M2	N	N1	N2	N3	N4	X	P	Kg
F 31 2/3	**P63**	195.5	11	12.8	4	140	115	95	—	M8x19	4	225.5	17
F 31 2/3	**P71**	195.5	14	16.3	5	160	130	110	—	M8x16	4.5	225.5	17
F 31 2/3	**P80**	205.5	19	21.8	6	200	165	130	—	M10x14.5	4	245	18
F 31 2/3	**P90**	205.5	24	27.3	8	200	165	130	—	M10x14.5	4	245	17
F 31 2/3	**P100**	205.5	28	31.3	8	250	215	180	—	M12x16	4.5	255	21
F 31 2/3	**P112**	205.5	28	31.3	8	250	215	180	—	M12x16	4.5	255	21
F 31 2/3	**P132**	—	38	41.3	10	300	265	230	—	14	5	291.5	24
F 31 4	**P63**	—	11	12.8	4	140	115	95	—	M8x19	4	283	17
F 31 4	**P71**	—	14	16.3	5	160	130	110	—	M8x16	4.5	283	17
F 31 4	**P80**	—	19	21.8	6	200	165	130	—	M10x14.5	4	302.5	18
F 31 4	**P90**	—	24	27.3	8	200	165	130	—	M10x14.5	4	302.5	18
F 31 4	**P100**	—	28	31.3	8	250	215	180	—	M12x16	4.5	312.5	22
F 31 4	**P112**	—	28	31.3	8	250	215	180	—	M12x16	4.5	312.5	22

F 31...HS

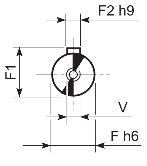
F2 h9
F1
V
F h6

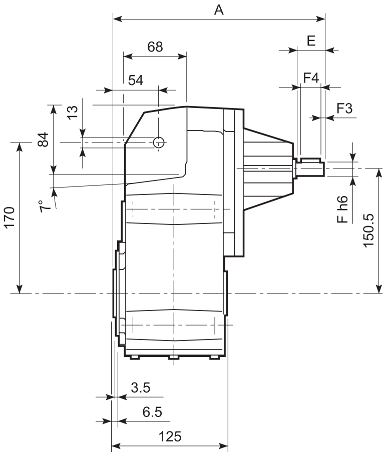
A
E
68
54
F4
F3
13
84
170
7°
F h6
150.5
3.5
6.5
125

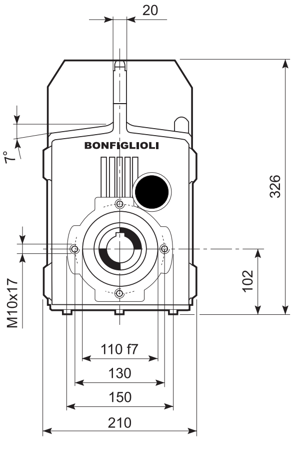
20
BONFIGLIOLI
7°
326
M10x17
102
110 f7
130
150
210

		A	E	F	F1	F2	F3	F4	V	Kg
F 31 2	**HS**	275.5	40	19	21.5	6	2.5	35	M6x16	16.7
F 31 3		275.5	40	19	21.5	6	2.5	35	M6x16	16.7
F 31 4		290	40	16	18	5	2.5	35	M6x16	16.5

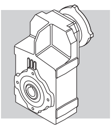

F 31...SK / SC

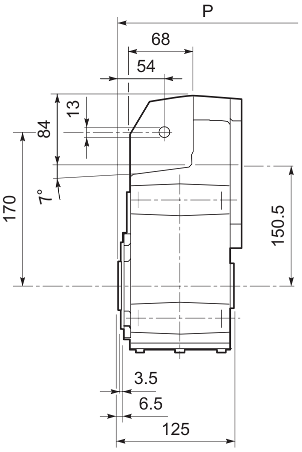

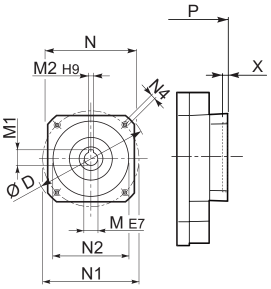

SK...

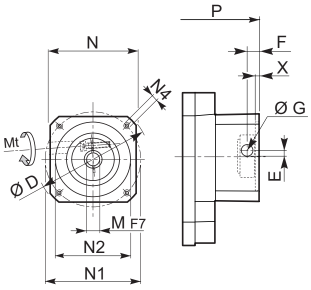

SC...

											2/3x		4x	
		D	M	M1	M2	N	N1	N2	N4	X	P	Kg	P	Kg
F 31 2/3/4	**SK 60A**	102	11	12.8	4	82	75	60	M5x10	3.5	197	16	254.5	16
F 31 2/3/4	**SK 60B**	102	14	16.3	5	82	75	60	M5x10	4	204	17	261.5	17
F 31 2/3/4	**SK 80A**	115	14	16.3	5	90	100	80	M6x12	4	204	17	261.5	17
F 31 2/3/4	**SK 80C**	120	19	21.8	6	96	100	80	M6x12	4	245	18	302.5	18
F 31 2/3/4	**SK 95A**	130	14	16.3	5	102	115	95	M8x12	4	245	18	302.5	18
F 31 2/3/4	**SK 95B**	130	19	21.8	6	102	115	95	M8x12	4	245	18	302.5	18
F 31 2/3/4	**SK 95C**	130	24	27.3	8	102	115	95	M8x12	4	245	18	302.5	18
F 31 2/3/4	**SK 110A**	150	19	21.8	6	120	130	110	M8x12	5	245	18	302.5	18
F 31 2/3/4	**SK 110B**	150	24	27.3	8	120	130	110	M8x12	5	245	18	302.5	18
F 31 2/3	**SK 130A**	188	24	27.3	8	142	165	130	M10x20	5	245	18	—	—

													2/3x		4x	
			Mt [Nm]	D	E	F	G	M	N	N1	N2	N4	X	P	Kg	P	Kg
F 31 2/3/4	**SC 60A**	M6	15	102	7	12.5	12.5	11	82	75	60	M5x10	4	224	17	281.5	17
F 31 2/3/4	**SC 60B**	M6	15	102	7	12.5	12.5	14	82	75	60	M5x10	4	224	18	281.5	18
F 31 2/3/4	**SC 80A**	M6	15	115	6	12.5	12.5	14	90	100	80	M6x12	4	224	18	281.5	18
F 31 2/3/4	**SC 80C**	M6	15	120	15.5	14.5	17.75	19	96	100	80	M6x12	4	268.5	19	326	19
F 31 2/3/4	**SC 95A**	M6	15	130	16.5	15	17.75	14	102	115	95	M8x16	4	268.5	19	326	19
F 31 2/3/4	**SC 95B**	M6	15	130	16.5	15	17.75	19	102	115	95	M8x16	4	268.5	19	326	19
F 31 2/3/4	**SC 95C**	M6	15	130	16.5	15	17.75	24	102	115	95	M8x16	4	268.5	19	326	19
F 31 2/3/4	**SC 110A**	M6	15	150	16.5	16	17.75	19	120	130	110	M8x16	5	268.5	20	326	20
F 31 2/3/4	**SC 110B**	M6	15	150	16.5	16	17.75	24	120	130	110	M8x16	5	268.5	20	326	20
F 31 2/3	**SC 130A**	M6	15	188	19	16	17.75	24	142	165	130	M10x20	5	268.5	21	—	—

F 31

F 31...H

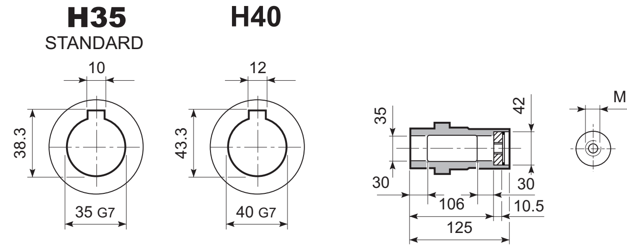
H35
STANDARD
10
38.3
35 G7
H40
12
43.3
40 G7
35
42
30
106
30
10.5
125
M10

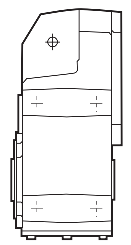

F 31...S

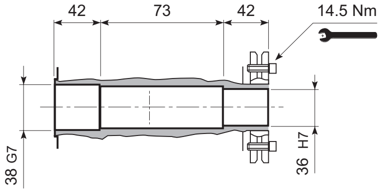
42
73
42
14.5 Nm
38 G7
36 H7

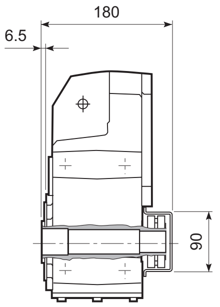

F 31...R

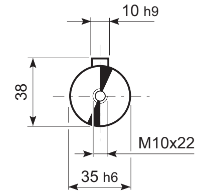
10 h9
38
M10x22
35 h6

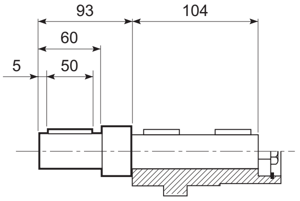
93
104
60
5
50

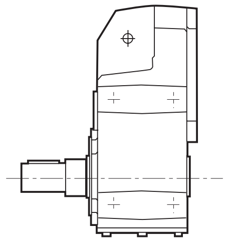

F 31...QF

	Ø
QF35	35
QF40	40

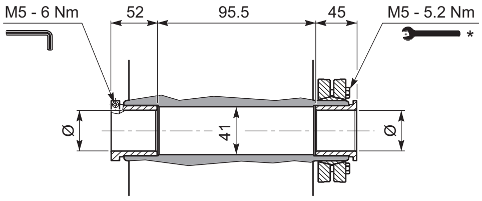
M5 - 6 Nm
52
95.5
45
M5 - 5.2 Nm
*
Ø
41
Ø

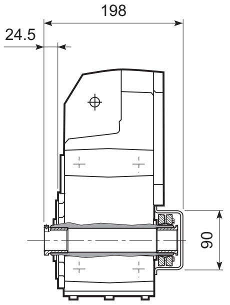

F 31...F...

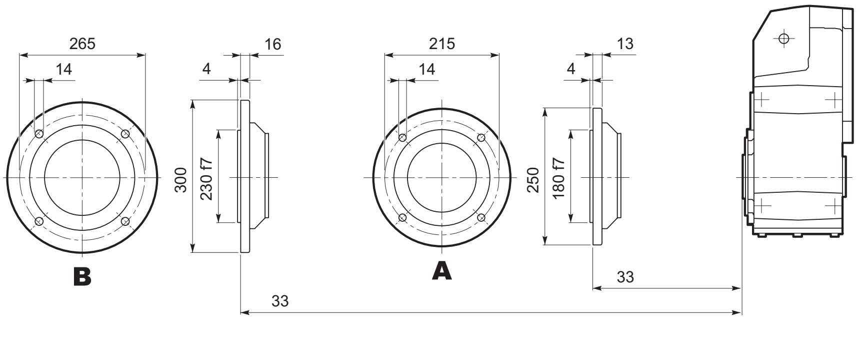
265
14
4
16
300
230 f7
B
215
14
4
13
250
180 f7
A
33
33

* Befolgen Sie die MONTAGEANLEITUNG die dem Getriebe beiliegt.

F 41...M

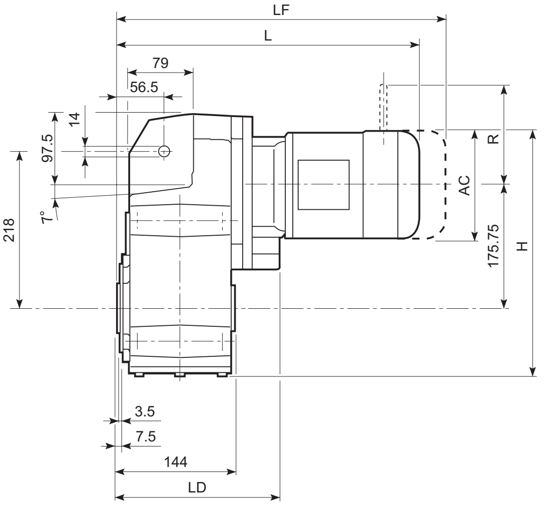
LF
L
79
56.5
14
97.5
218
7°
AC
R
175.75
H
3.5
7.5
144
LD

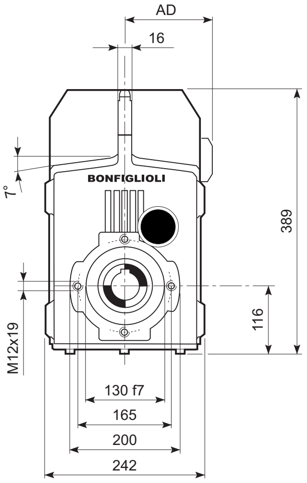
AD
16
7°
BONFIGLIOLI
389
M12x19
116
130 f7
165
200
242

									M...FD M...FA		M...FD		M...FA	
			AC	H	L	LD	AD	Kg	LF	Kg	R	AD	R	AD
F 41 2/3	**S1**	**M1**	138	360.8	401	199.5	108	46	462	48	103	135	124	108
F 41 2/3	**S2**	**M2S**	156	369.8	430	215	119	49	500	53	129	146	134	119
F 41 2/3	**S3**	**M3S**	195	389.3	473	231	142	54	569	62	160	158	160	142
F 41 2/3	**S3**	**M3L**	195	389.3	505	231	142	62	596	69	160	158	160	142
F 41 2/3	**S4**	**M4**	258	420.8	613	—	193	96	722	114	226	210	217	193
F 41 2/3	**S4**	**M4LC**	258	420.8	648	—	193	104	747	122	226	210	217	193
F 41 4	**S05**	**M05**	231	352.3	433.5	—	95	45	499.5	46	96	122	116	95
F 41 4	**S1**	**M1**	138	360.8	462.5	—	108	47	523.5	49	103	135	124	108
F 41 4	**S2**	**M2S**	156	369.8	491.5	—	119	50	561.5	58	129	146	134	119
F 41 4	**S3**	**M3S**	195	389.3	534.5	—	142	55	630.5	62	160	158	160	142
F 41 4	**S3**	**M3L**	195	389.3	566.5	—	142	63	657.5	70	160	158	160	142

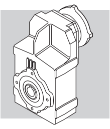

F 41...P(IEC)

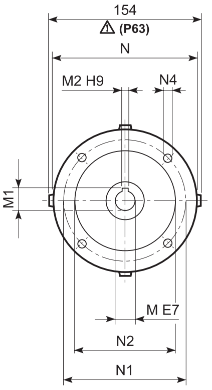
154
⚠ (P63)
N
M2 H9
N4
M1
M E7
N2
N1

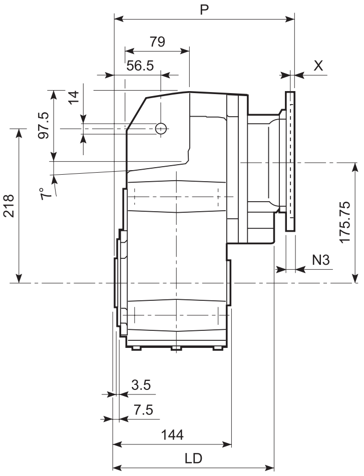
P
79
56.5
X
14
97.5
218
7°
175.75
N3
3.5
7.5
144
LD

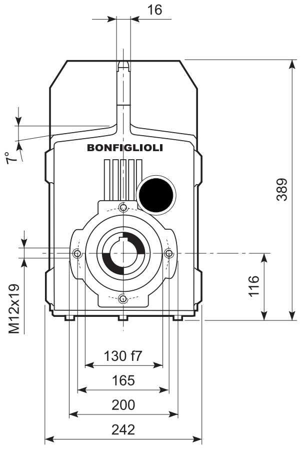
16
7°
BONFIGLIOLI
389
116
M12x19
130 f7
165
200
242

		LD	M	M1	M2	N	N1	N2	N3	N4	X	P	Kg
F 41 2/3	**P63**	215	11	12.8	4	140	115	95	—	M8x19	4	246	42
F 41 2/3	**P71**	215	14	16.3	5	160	130	110	—	M8x16	4.5	246	42
F 41 2/3	**P80**	231	19	21.8	6	200	165	130	—	M10x14.5	4	265.5	43
F 41 2/3	**P90**	231	24	27.3	8	200	165	130	—	M10x14.5	4	265.5	43
F 41 2/3	**P100**	231	28	31.3	8	250	215	180	—	M12x16	4.5	275.5	47
F 41 2/3	**P112**	231	28	31.3	8	250	215	180	—	M12x16	4.5	275.5	47
F 41 2/3	**P132**	—	38	41.3	10	300	265	230	16	14	5	312	50
F 41 4	**P63**	—	11	12.8	4	140	115	95	—	M8x19	4	307.5	44
F 41 4	**P71**	—	14	16.3	5	160	130	110	—	M8x16	4.5	307.5	44
F 41 4	**P80**	—	19	21.8	6	200	165	130	—	M10x14.5	4	327	45
F 41 4	**P90**	—	24	27.3	8	200	165	130	—	M10x14.5	4	327	45
F 41 4	**P100**	—	28	31.3	8	250	215	180	—	M12x16	4.5	337	49
F 41 4	**P112**	—	28	31.3	8	250	215	180	—	M12x16	4.5	337	49

F 41...HS

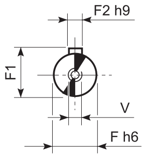
F2 h9
F1
V
F h6

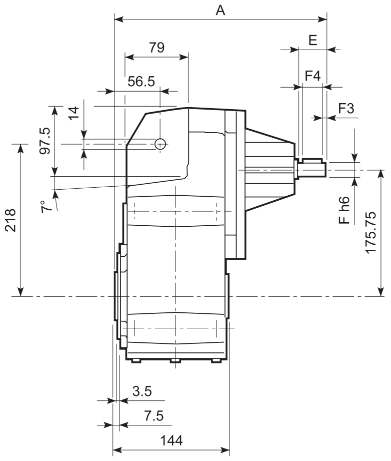
A
79
E
56.5
F4
F3
14
97.5
218
7°
F h6
175.75
3.5
7.5
144

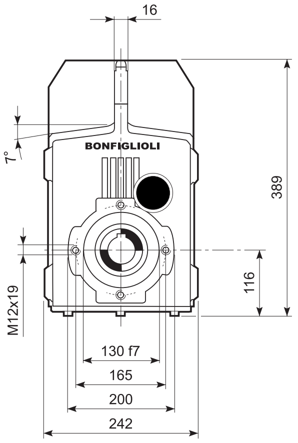
16
7°
BONFIGLIOLI
389
116
M12x19
130 f7
165
200
242

		A	E	F	F1	F2	F3	F4	V	Kg
F 41 2	**HS**	335.5	50	24	27	8	2.5	45	M8x19	44.9
F 41 3		335.5	50	24	27	8	2.5	45	M8x19	46.4
F 41 4		357.5	40	19	21.5	6	2.5	35	M6x16	43.5

F 41...SK / SC

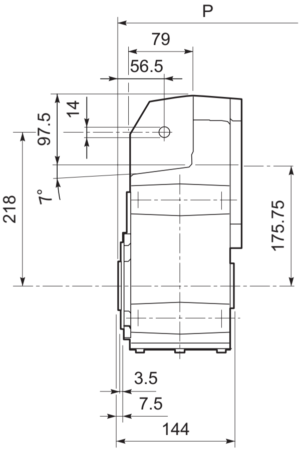

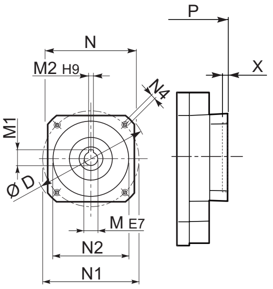

SK...

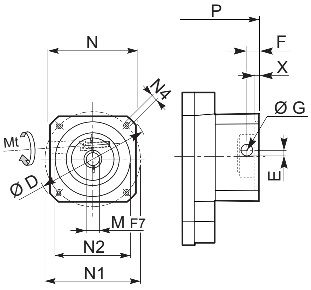

SC...

											2/3x		4x	
		D	M	M1	M2	N	N1	N2	N4	X	P	Kg	P	Kg
F 41 4	**SK 60A**	102	11	12.8	4	82	75	60	M5x10	3.5	—	—	279	43
F 41 4	**SK 60B**	102	14	16.3	5	82	75	60	M5x10	4	—	—	286	44
F 41 4	**SK 80A**	115	14	16.3	5	90	100	80	M6x12	4	—	—	286	44
F 41 2/3	**SK 80B**	120	14	16.3	5	96	100	80	M6x12	4	265.5	43	—	—
F 41 2/3/4	**SK 80C**	120	19	21.8	6	96	100	80	M6x12	4	265.5	43	327	45
F 41 2/3/4	**SK 95A**	130	14	16.3	5	102	115	95	M8x12	4	265.5	43	327	45
F 41 2/3/4	**SK 95B**	130	19	21.8	6	102	115	95	M8x12	4	265.5	43	327	45
F 41 2/3/4	**SK 95C**	130	24	27.3	8	102	115	95	M8x12	4	265.5	43	327	45
F 41 2/3/4	**SK 110A**	150	19	21.8	6	120	130	110	M8x12	5	265.5	43	327	45
F 41 2/3/4	**SK 110B**	150	24	27.3	8	120	130	110	M8x12	5	265.5	43	327	45
F 41 2/3	**SK 130A**	188	24	27.3	8	142	165	130	M10x20	5	265.5	45	—	—
F 41 2/3	**SK 130B**	189	32	35.3	10	160	165	130	M10x20	5	312	47	—	—
F 41 2/3	**SK 180A**	240	32	35.3	10	192	215	180	M12x19	5	312	47	—	—
F 41 2/3	**SK 180B**	240	38	41.3	10	192	215	180	M12x19	5	312	47	—	—

														2/3x		4x	
			Mt [Nm]	D	E	F	G	M	N	N1	N2	N4	X	P	Kg	P	Kg
F 41 4	**SC 60A**	M6	15	102	7	12.5	12.5	11	82	75	60	M5x10	4	—	—	306	44
F 41 4	**SC 60B**	M6	15	102	7	12.5	12.5	14	82	75	60	M5x10	4	—	—	306	45
F 41 4	**SC 80A**	M6	15	115	6	12.5	12.5	14	90	100	80	M6x12	4	—	—	306	45
F 41 2/3	**SC 80B**	M6	15	120	15.5	14.5	17.75	14	96	100	80	M6x12	4	289	44	—	—
F 41 2/3/4	**SC 80C**	M6	15	120	15.5	14.5	17.75	19	96	100	80	M6x12	4	289	44	350.5	46
F 41 2/3/4	**SC 95A**	M6	15	130	16.5	15	17.75	14	102	115	95	M8x16	4	289	44	350.5	46
F 41 2/3/4	**SC 95B**	M6	15	130	16.5	15	17.75	19	102	115	95	M8x16	4	289	44	350.5	46
F 41 2/3/4	**SC 95C**	M6	15	130	16.5	15	17.75	24	102	115	95	M8x16	4	289	44	350.5	46
F 41 2/3/4	**SC 110A**	M6	15	150	16.5	16	17.75	19	120	130	110	M8x16	5	289	45	350.5	47
F 41 2/3/4	**SC 110B**	M6	15	150	16.5	16	17.75	24	120	130	110	M8x16	5	289	45	350.5	47
F 41 2/3	**SC 130A**	M6	15	188	19	16	17.75	24	142	165	130	M10x20	5	289	46	—	—
F 41 2/3	**SC 130B**	M8	36	189	20	17	17.75	32	160	165	130	M10x20	5	335	50	—	—
F 41 2/3	**SC 180A**	M8	36	240	20	17.5	17.75	32	192	215	180	M12x24	5	339	50	—	—
F 41 2/3	**SC 180B**	M8	36	240	20	17.5	17.75	38	192	215	180	M12x24	5	339	50	—	—

F 41

F 41...H

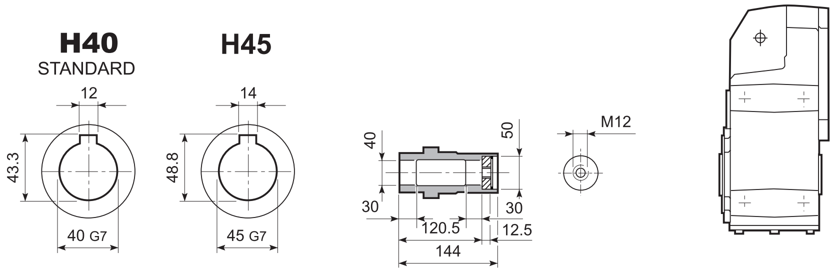
H40
STANDARD
H45
12
43.3
40 G7
14
48.8
45 G7
40
50
30
30
120.5
12.5
144
M12

F 41...S

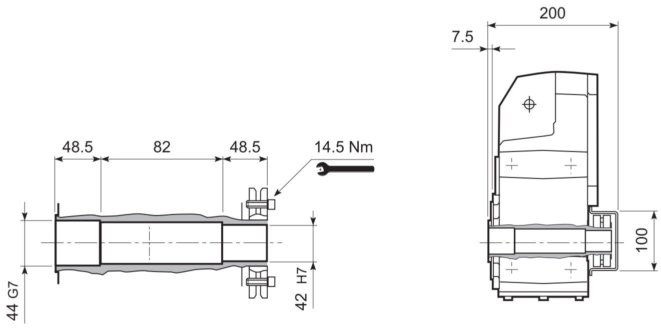
200
7.5
48.5
82
48.5
14.5 Nm
44 G7
42 H7
100

F 41...R

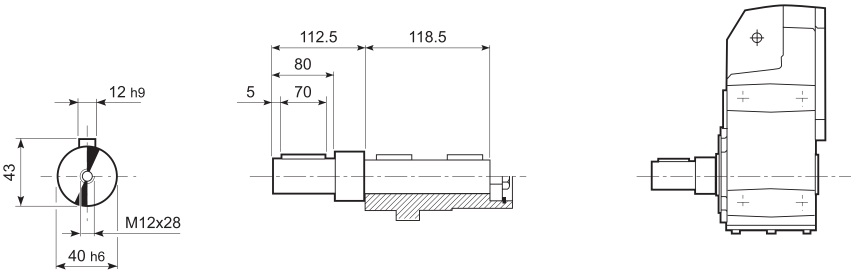
112.5
118.5
80
5
70
12 h9
43
M12x28
40 h6

F 41...QF

	Ø
QF42	42
QF45	45

⚠

$M_{n2\ max}$ [Nm]	
F 41 QF42	850
F 41 QF45	1000

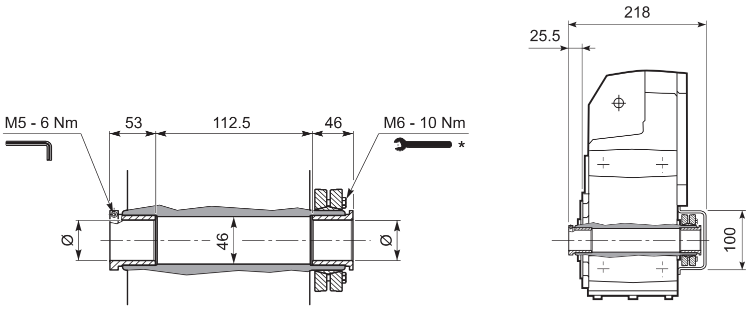
218
25.5
M5 - 6 Nm
53
112.5
46
M6 - 10 Nm
*
Ø
46
Ø
100

F 41...F...

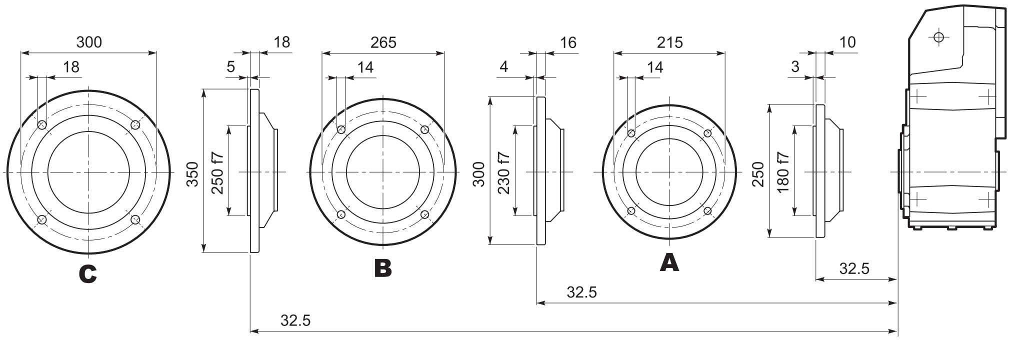
300
18
18
5
265
14
16
4
215
14
10
3
350
250 f7
300
230 f7
250
180 f7
C
B
A
32.5
32.5
32.5

* Befolgen Sie die MONTAGEANLEITUNG die dem Getriebe beiliegt.

F 51...M

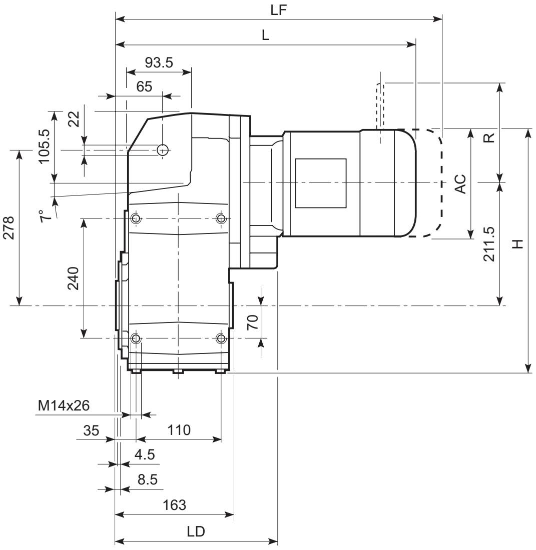
LF
L
93.5
65
22
105.5
7°
278
240
70
R
AC
211.5
H
M14x26
35
110
4.5
8.5
163
LD

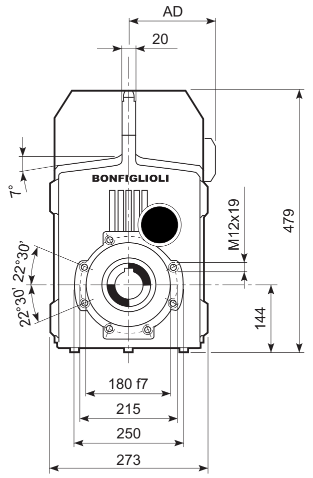
AD
20
7°
BONFIGLIOLI
M12x19
479
22°30'
22°30'
144
180 f7
215
250
273

									M...FD M...FA		M...FD		M...FA	
			AC	H	L	LD	AD	Kg	LF	Kg	R	AD	R	AD
F 51 2/3	**S1**	**M1**	138	424	423	—	108	73	484	76	103	135	124	108
F 51 2/3	**S2**	**M2S**	156	433	452	238	119	73	522	76	129	146	134	119
F 51 2/3	**S3**	**M3S**	195	452.5	495	253	142	77	591	85	160	158	160	142
F 51 2/3	**S3**	**M3L**	195	452.5	527	253	142	85	618	92	160	158	160	142
F 51 2/3	**S4**	**M4**	258	484	635	238	193	119	744	137	226	210	217	193
F 51 2/3	**S4**	**M4LC**	258	484	670	238	193	127	769	145	226	210	217	193
F 51 2/3	**S5**	**M5S**	310	510	721.5	—	245	153	861.5	188	266	245	247	245
F 51 2/3	**S5**	**M5L**	310	510	765.5	—	245	169	905.5	204	266	245	247	245
F 51 4	**S1**	**M1**	138	424	494.5	—	108	75	555.5	78	103	135	124	108
F 51 4	**S2**	**M2S**	156	433	523.5	—	119	79	593.5	83	129	146	134	119
F 51 4	**S3**	**M3S**	195	452.5	566.5	—	142	84	662.5	91	160	158	160	142
F 51 4	**S3**	**M3L**	195	452.5	598.5	—	142	91	689.5	98	160	158	160	142

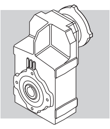

F 51...P(IEC)

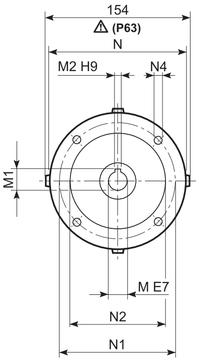

154
⚠ (P63)
N
M2 H9
N4
M1
M E7
N2
N1

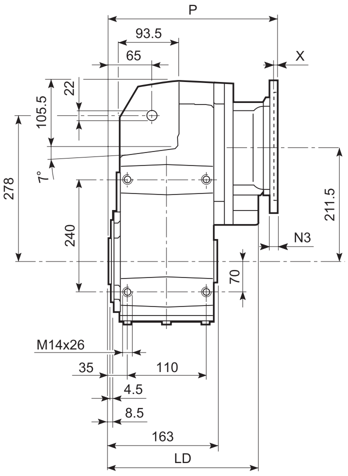

P
93.5
65
X
22
105.5
7°
278
240
211.5
N3
70
M14x26
35
110
4.5
8.5
163
LD

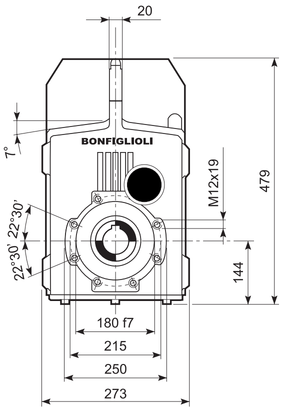

20
7°
BONFIGLIOLI
M12x19
479
22°30'
22°30'
22°30'
144
180 f7
215
250
273

		LD	M	M1	M2	N	N1	N2	N3	N4	X	P	Kg
F 51 2/3	**P63**	238	11	12.8	4	140	115	95	—	M8x19	4	268	65
F 51 2/3	**P71**	238	14	16.3	5	160	130	110	—	M8x16	4.5	268	65
F 51 2/3	**P80**	253	19	21.8	6	200	165	130	—	M10x14.5	4	287.5	67
F 51 2/3	**P90**	253	24	27.3	8	200	165	130	—	M10x14.5	4	287.5	67
F 51 2/3	**P100**	238	28	31.3	8	250	215	180	—	M12x16	4.5	297.5	71
F 51 2/3	**P112**	238	28	31.3	8	250	215	180	—	M12x16	4.5	297.5	71
F 51 2/3	**P132**	238	38	41.3	10	300	265	230	16	14	5	334	74
F 51 2/3	**P160**	—	42	45.3	12	350	300	250	23	18	5.5	384.5	78
F 51 2/3	**P180**	—	48	51.8	14	350	300	250	23	18	5.5	384.5	78
F 51 4	**P63**	—	11	12.8	4	140	115	95	—	M8x19	4	339.5	70
F 51 4	**P71**	—	14	16.3	5	160	130	110	—	M8x16	4.5	339.5	70
F 51 4	**P80**	—	19	21.8	6	200	165	130	—	M10x14.5	4	359	71
F 51 4	**P90**	—	24	27.3	8	200	165	130	—	M10x14.5	4	359	71
F 51 4	**P100**	—	28	31.3	8	250	215	180	—	M12x16	4.5	369	75
F 51 4	**P112**	—	28	31.3	8	250	215	180	—	M12x16	4.5	369	75

F 51...HS

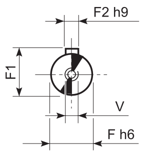

F2 h9
F1
V
F h6

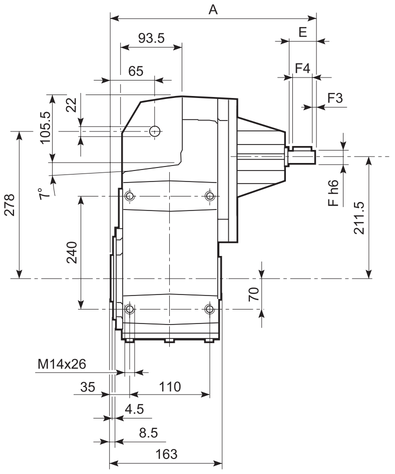

A
93.5
E
F4
65
F3
22
105.5
7°
278
F h6
211.5
240
70
M14x26
35
110
4.5
8.5
163

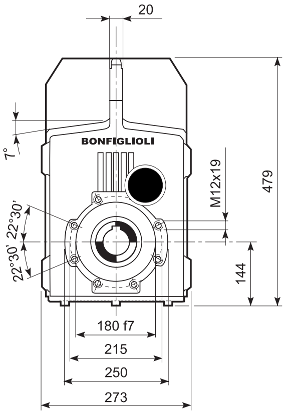

20
7°
BONFIGLIOLI
M12x19
479
22°30'
22°30'
22°30'
144
180 f7
215
250
273

		A	E	F	F1	F2	F3	F4	V	Kg
F 51 2	**HS**	357.5	50	24	27	8	2.5	45	M8x19	65
F 51 3		357.5	50	24	27	8	2.5	45	M8x19	68
F 51 4		389.5	40	19	21.5	6	2.5	35	M6x16	70

F 51...SK / SC

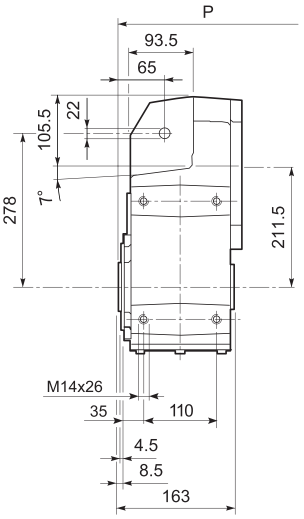

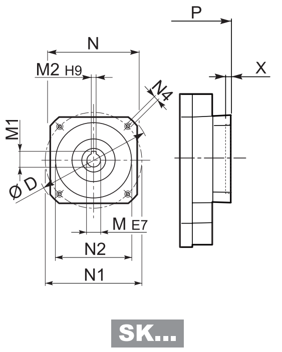

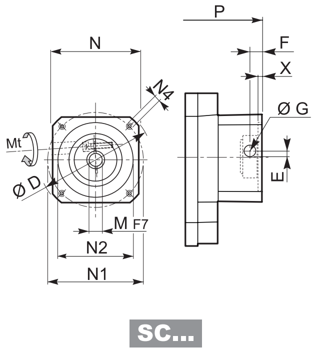

											2/3x		4x	
		D	M	M1	M2	N	N1	N2	N4	X	P	Kg	P	Kg
F 51 2/3	**SK 80B**	120	14	16.3	5	96	100	80	M6x12	4	287.5	67	—	—
F 51 2/3/4	**SK 80C**	120	19	21.8	6	96	100	80	M6x12	4	287.5	67	359	71
F 51 2/3/4	**SK 95A**	130	14	16.3	5	102	115	95	M8x12	4	287.5	67	359	71
F 51 2/3/4	**SK 95B**	130	19	21.8	6	102	115	95	M8x12	4	287.5	67	359	71
F 51 2/3/4	**SK 95C**	130	24	27.3	8	102	115	95	M8x12	4	287.5	67	359	71
F 51 2/3/4	**SK 110A**	150	19	21.8	6	120	130	110	M8x12	5	287.5	67	359	71
F 51 2/3/4	**SK 110B**	150	24	27.3	8	120	130	110	M8x12	5	287.5	67	359	71
F 51 2/3/4	**SK 130A**	188	24	27.3	8	142	165	130	M10x20	5	287.5	69	359	73
F 51 2/3	**SK 130B**	189	32	35.3	10	160	165	130	M10x20	5	334	75	—	—
F 51 2/3	**SK 180A**	240	32	35.3	10	192	215	180	M12x19	5	334	75	—	—
F 51 2/3	**SK 180B**	240	38	41.3	10	192	215	180	M12x19	5	334	75	—	—

														2/3x		4x	
			Mt [Nm]	D	E	F	G	M	N	N1	N2	N4	X	P	Kg	P	Kg
F 51 2/3	**SC 80B**	M6	15	120	15.5	14.5	17.75	14	96	100	80	M6x12	4	311	70	—	—
F 51 2/3/4	**SC 80C**	M6	15	120	15.5	14.5	17.75	19	96	100	80	M6x12	4	311	70	382.5	74
F 51 2/3/4	**SC 95A**	M6	15	130	16.5	15	17.75	14	102	115	95	M8x16	4	311	70	382.5	74
F 51 2/3/4	**SC 95B**	M6	15	130	16.5	15	17.75	19	102	115	95	M8x16	4	311	70	382.5	74
F 51 2/3/4	**SC 95C**	M6	15	130	16.5	15	17.75	24	102	115	95	M8x16	4	311	70	382.5	74
F 51 2/3/4	**SC 110A**	M6	15	150	16.5	16	17.75	19	120	130	110	M8x16	5	311	71	382.5	75
F 51 2/3/4	**SC 110B**	M6	15	150	16.5	16	17.75	24	120	130	110	M8x16	5	311	71	382.5	75
F 51 2/3/4	**SC 130A**	M6	15	188	19	16	17.75	24	142	165	130	M10x20	5	311	72	382.5	76
F 51 2/3	**SC 130B**	M8	36	189	20	17	17.75	32	160	165	130	M10x20	5	357	75	—	—
F 51 2/3	**SC 180A**	M8	36	240	20	17.5	17.75	32	192	215	180	M12x24	5	361	75	—	—
F 51 2/3	**SC 180B**	M8	36	240	20	17.5	17.75	38	192	215	180	M12x24	5	361	75	—	—

F 51

F 51...H

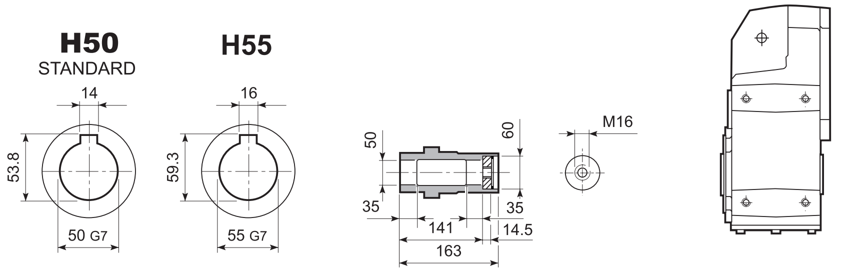
H50
STANDARD
14
53.8
50 G7
H55
16
59.3
55 G7
50
60
35
141
35
14.5
163
M16

F 51...S

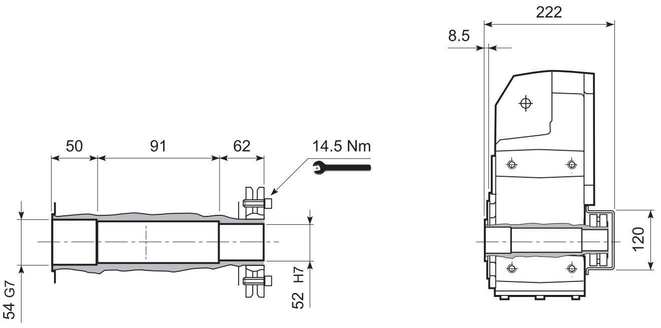
222
8.5
50
91
62
14.5 Nm
54 G7
52 H7
120

F 51...R

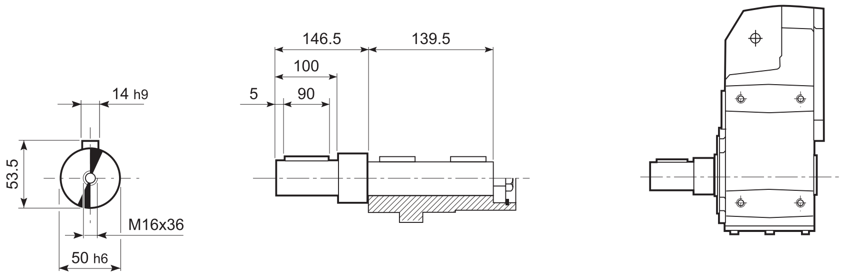
14 h9
53.5
M16x36
50 h6
146.5
139.5
100
5
90

F 51...QF

	Ø
QF50	50
QF55	55

$M_{n2\,max}$ [Nm]	
F 51 QF50	1750

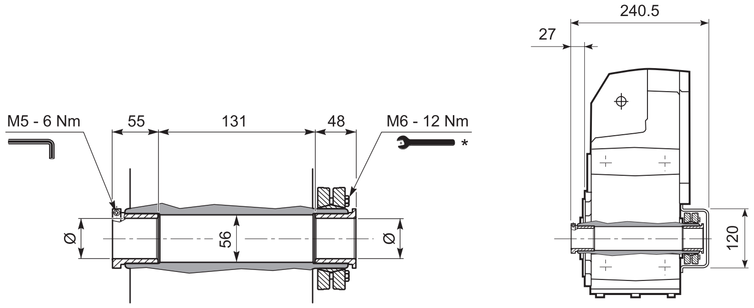
240.5
27
M5 - 6 Nm
55
131
48
M6 - 12 Nm
*
Ø
56
Ø
120

F 51...F...

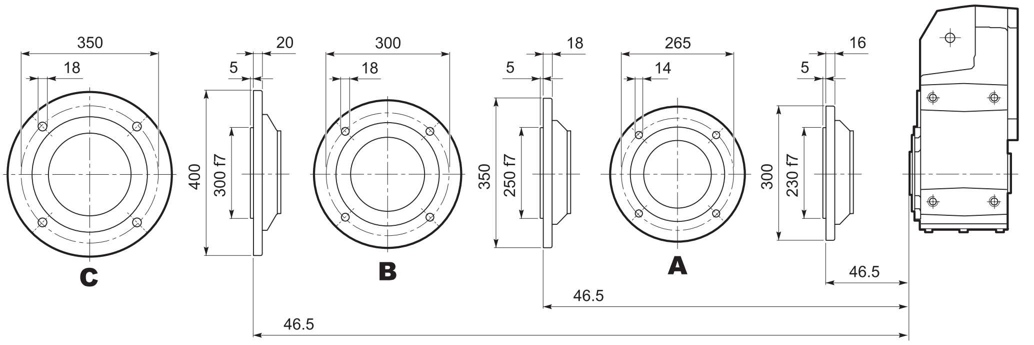
350
18
400
300 f7
5
20
C
300
18
350
250 f7
5
18
B
265
14
300
230 f7
5
16
A
46.5
46.5
46.5

* Befolgen Sie die MONTAGEANLEITUNG die dem Getriebe beiliegt.

F 60...M

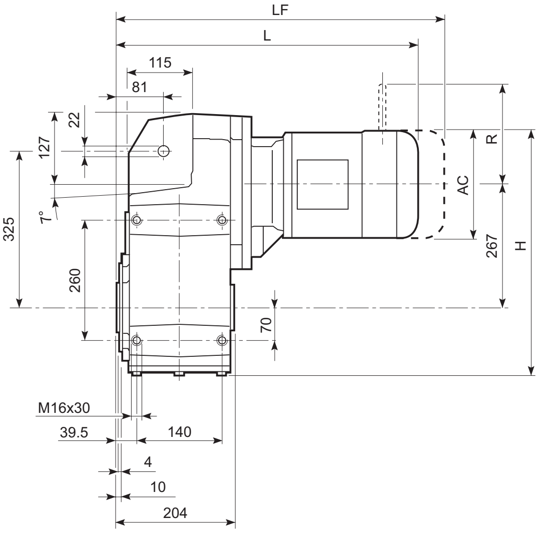
LF
L
115
81
22
127
325
7°
260
R
AC
267
H
70
M16x30
39.5
140
4
10
204

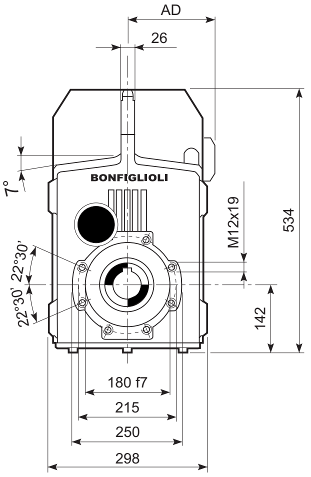
AD
26
7°
BONFIGLIOLI
M12x19
534
22°30'
22°30'
142
180 f7
215
250
298

								M...FD M...FA		M...FD		M...FA	
			AC	H	L	AD	Kg	LF	Kg	R	AD	R	AD
F 60 3	**S2**	**M2S**	156	487	486.5	119	114	556.5	121	129	146	134	119
F 60 3	**S3**	**M3S**	195	506.5	529.5	142	114	625.5	122	160	158	160	142
F 60 3	**S3**	**M3L**	195	506.5	561.5	142	122	652.5	129	160	158	160	142
F 60 3	**S4**	**M4**	258	538	669.5	193	156	777.5	174	226	210	217	193
F 60 3	**S4**	**M4LC**	258	538	704.5	193	164	802.5	182	226	210	217	193
F 60 3	**S5**	**M5S**	310	564	756	245	184	896	214	266	245	247	245
F 60 3	**S5**	**M5L**	310	564	800	245	200	940	230	266	245	247	245
F 60 4	**S1**	**M1**	138	478	528	108	113	589	116	103	135	124	108
F 60 4	**S2**	**M2S**	156	487	557	119	117	627	121	129	146	134	119
F 60 4	**S3**	**M3S**	195	506.5	600	142	122	696	129	160	158	160	142
F 60 4	**S3**	**M3L**	195	506.5	632	142	129	723	136	160	158	160	142

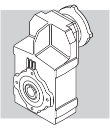

F 60...P(IEC)

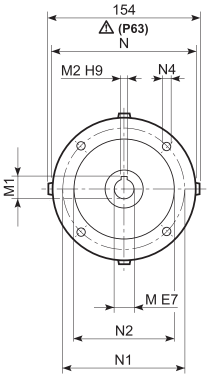

154
⚠ (P63)
N
M2 H9
N4
M1
M E7
N2
N1

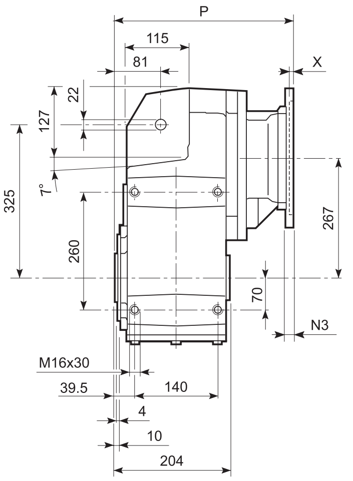

P
115
81
X
22
127
7°
325
260
267
70
N3
M16x30
39.5
140
4
10
204

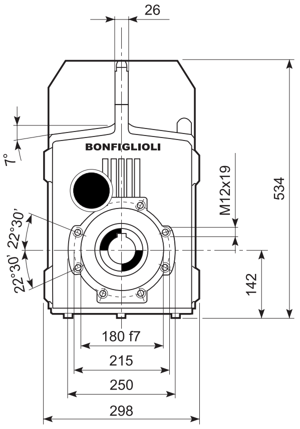

26
7°
BONFIGLIOLI
M12x19
534
22°30'
22°30'
142
180 f7
215
250
298

		M	M1	M2	N	N1	N2	N3	N4	X	P	Kg
F 60 3	**P63**	11	12.8	4	140	115	95	—	M8x19	4	302.5	103
F 60 3	**P71**	14	16.3	5	160	130	110	—	M8x16	4.5	302.5	103
F 60 3	**P80**	19	21.8	6	200	165	130	—	M10x14.5	4	322	104
F 60 3	**P90**	24	27.3	8	200	165	130	—	M10x14.5	4	322	104
F 60 3	**P100**	28	31.3	8	250	215	180	—	M12x16	4.5	331	108
F 60 3	**P112**	28	31.3	8	250	215	180	—	M12x16	4.5	331	108
F 60 3	**P132**	38	41.3	10	300	265	230	16	14	5	367.5	111
F 60 3	**P160**	42	45.3	12	350	300	250	23	18	5.5	419	116
F 60 3	**P180**	48	51.8	14	350	300	250	23	18	5.5	419	116
F 60 4	**P63**	11	12.8	4	140	115	95	—	M8x19	4	373	108
F 60 4	**P71**	14	16.3	5	160	130	110	—	M8x16	4.5	373	108
F 60 4	**P80**	19	21.8	6	200	165	130	—	M10x14.5	4	392.5	110
F 60 4	**P90**	24	27.3	8	200	165	130	—	M10x14.5	4	392.5	110
F 60 4	**P100**	28	31.3	8	250	215	180	—	M12x16	4.5	402.5	114
F 60 4	**P112**	28	31.3	8	250	215	180	—	M12x16	4.5	402.5	114

F 60...HS

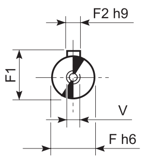

F2 h9
F1
V
F h6

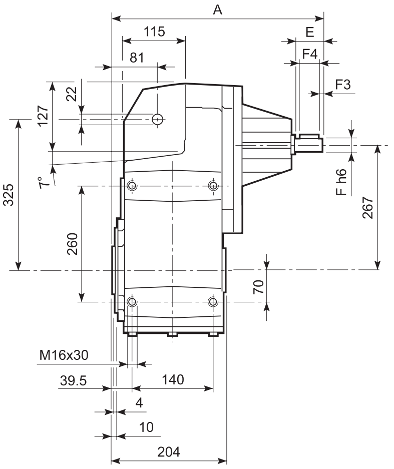

A
115
E
81
F4
F3
22
127
7°
325
260
F h6
267
70
M16x30
39.5
140
4
10
204

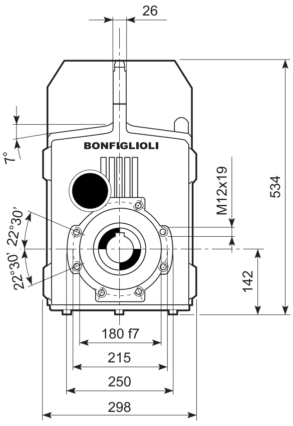

26
7°
BONFIGLIOLI
M12x19
534
22°30'
22°30'
142
180 f7
215
250
298

		A	E	F	F1	F2	F3	F4	V	Kg
F 60 3	**HS**	419	60	28	31	8	5.0	50	M10x22	108
F 60 4		462.5	50	24	27	8	2.5	45	M8x19	105

F 60...SK / SC

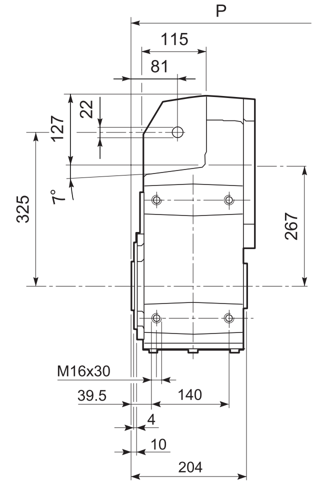

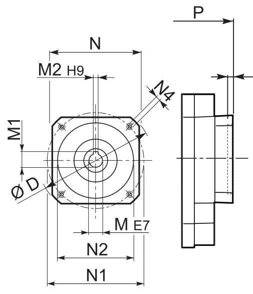

SK...

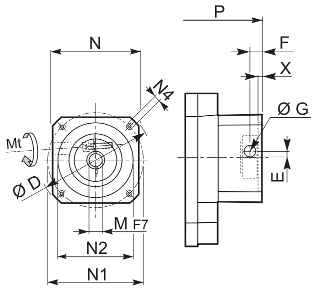

SC...

											2/3x		4x	
		D	M	M1	M2	N	N1	N2	N4	X	P	Kg	P	Kg
F 60 4	**SK 80B**	120	14	16.3	5	96	100	80	M6x12	4	—	—	392.5	109
F 60 3/4	**SK 80C**	120	19	21.8	6	96	100	80	M6x12	4	322	106	392.5	112
F 60 3/4	**SK 95A**	130	14	16.3	5	102	115	95	M8x12	4	322	106	392.5	112
F 60 3/4	**SK 95B**	130	19	21.8	6	102	115	95	M8x12	4	322	106	392.5	112
F 60 3/4	**SK 95C**	130	24	27.3	8	102	115	95	M8x12	4	322	106	392.5	112
F 60 3/4	**SK 110A**	140	19	21.8	6	120	130	110	M8x12	5	322	106	392.5	112
F 60 3/4	**SK 110B**	140	24	27.3	8	120	130	110	M8x12	5	322	106	392.5	112
F 60 3/4	**SK 130A**	188	24	27.3	8	142	165	130	M10x20	5	322	108	392.5	112
F 60 3	**SK 130B**	189	32	35.3	10	160	165	130	M10x20	5	368.5	109	—	—
F 60 3	**SK 180A**	240	32	35.3	10	192	215	180	M12x19	5	368.5	109	—	—
F 60 3	**SK 180B**	240	38	41.3	10	192	215	180	M12x19	5	368.5	109	—	—

														2/3x		4x	
			Mt [Nm]	D	E	F	G	M	N	N1	N2	N4	X	P	Kg	P	Kg
F 60 4	**SC 80B**	M6	15	120	15.5	14.5	17.75	14	96	100	80	M6x12	4	—	—	416	113
F 60 3/4	**SC 80C**	M6	15	120	15.5	14.5	17.75	19	96	100	80	M6x12	4	345.5	107	416	113
F 60 3/4	**SC 95A**	M6	15	130	16.5	15	17.75	14	102	115	95	M8x16	4	345.5	107	416	113
F 60 3/4	**SC 95B**	M6	15	130	16.5	15	17.75	19	102	115	95	M8x16	4	345.5	107	416	113
F 60 3/4	**SC 95C**	M6	15	130	16.5	15	17.75	24	102	115	95	M8x16	4	345.5	107	416	113
F 60 3/4	**SC 110A**	M6	15	140	16.5	16	17.75	19	120	130	110	M8x16	5	345.5	108	416	113
F 60 3/4	**SC 110B**	M6	15	140	16.5	16	17.75	24	120	130	110	M8x16	5	345.5	108	416	113
F 60 3/4	**SC 130A**	M6	15	188	19	16	17.75	24	142	165	130	M10x20	5	345.5	109	416	115
F 60 3	**SC 130B**	M8	36	189	20	17	17.75	32	160	165	130	M10x20	5	390.5	112	—	—
F 60 3	**SC 180A**	M8	36	240	20	17.5	17.75	32	192	215	180	M12x24	5	394.5	112	—	—
F 60 3	**SC 180B**	M8	36	240	20	17.5	17.75	38	192	215	180	M12x24	5	394.5	112	—	—

F 60

F 60...H

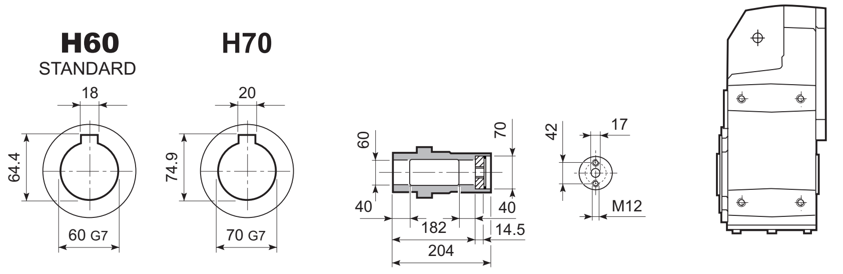
H60
STANDARD
18
64.4
60 G7
H70
20
74.9
70 G7
60
70
40
182
40
14.5
204
42
17
M12

F 60...S

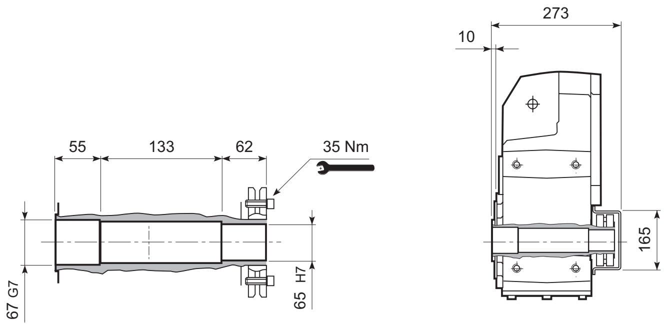
273
10
55
133
62
35 Nm
67 G7
65 H7
165

F 60...R

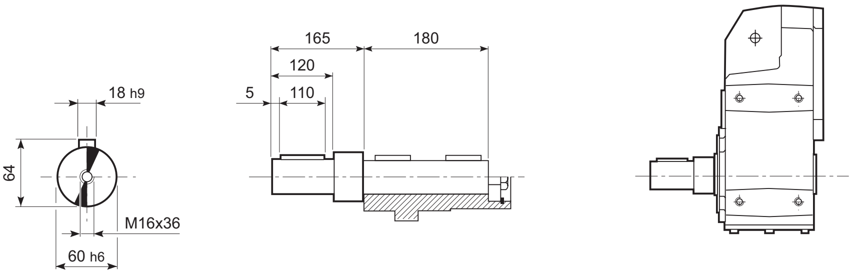
18 h9
64
M16x36
60 h6
165
180
120
5
110

F 60...QF

	Ø
QF60	60
QF65	65
QF70	70

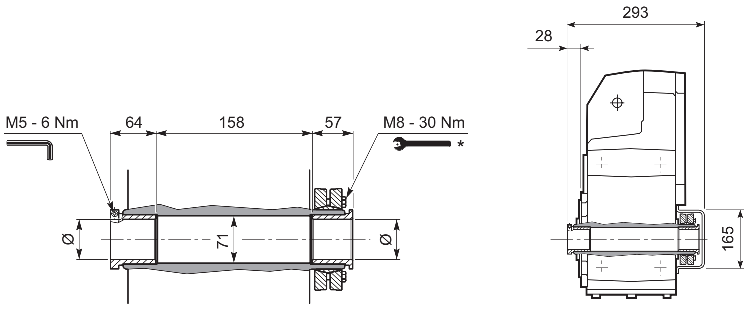
293
28
M5 - 6 Nm
64
158
57
M8 - 30 Nm
*
Ø
71
Ø
165

F 60...F...

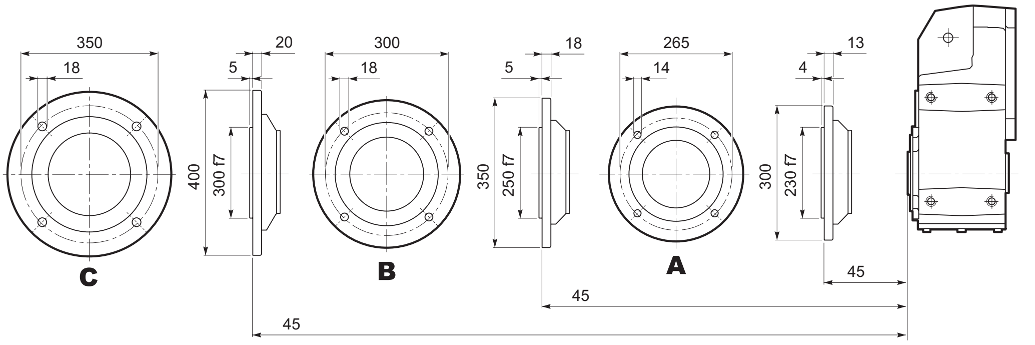
350
18
20
5
400
300 f7
C
300
18
18
5
350
250 f7
B
265
14
13
4
300
230 f7
A
45
45
45

* Befolgen Sie die MONTAGEANLEITUNG die dem Getriebe beiliegt.

F 70...M

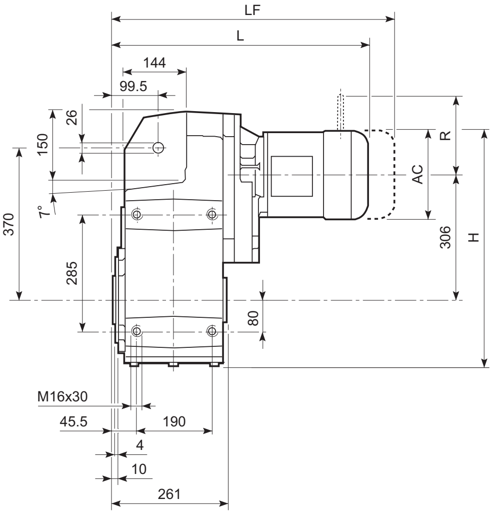
LF
L
144
99.5
26
150
370
7°
285
80
306
H
AC
R
M16x30
45.5
190
4
10
261

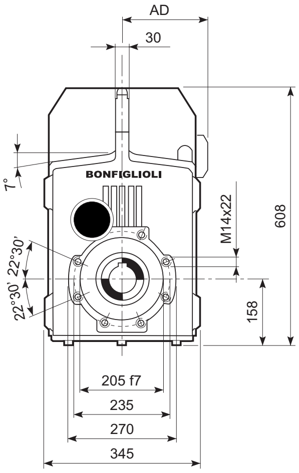
AD
30
BONFIGLIOLI
7°
M14x22
608
22°30'
22°30'
158
205 f7
235
270
345

								M...FD M...FA		M...FD		M...FA	
			AC	H	L	AD	Kg	LF	Kg	R	AD	R	AD
F 70 3	**S2**	**M2S**	156	542	552	119	173	622	177	129	146	134	119
F 70 3	**S3**	**M3S**	195	561.5	595	142	178	691	186	160	158	160	142
F 70 3	**S3**	**M3L**	195	561.5	627	142	186	718	193	160	158	160	142
F 70 3	**S4**	**M4**	258	593	735	193	220	844	238	226	210	217	193
F 70 3	**S4**	**M4LC**	258	593	770	193	228	869	246	226	210	217	193
F 70 3	**S5**	**M5S**	310	619	821.5	245	248	961.5	278	266	245	247	245
F 70 3	**S5**	**M5L**	310	619	865.5	245	264	1005.5	294	266	245	247	245
F 70 4	**S1**	**M1**	138	533	574	108	173	635	176	103	135	124	108
F 70 4	**S2**	**M2S**	156	542	603	119	177	673	180	129	146	134	119
F 70 4	**S3**	**M3S**	195	561.5	646	142	181	742	189	160	158	160	142
F 70 4	**S3**	**M3L**	195	561.5	678	142	189	769	196	160	158	160	142
F 70 4	**S4**	**M4**	258	593	786	193	223	895	241	226	210	217	193
F 70 4	**S4**	**M4LC**	258	593	821	193	231	920	249	226	210	217	193

F 70...P(IEC)

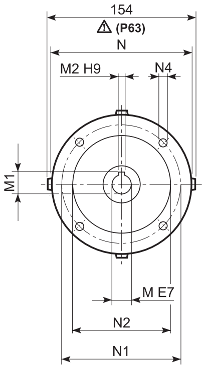
154
(P63)
N
M2 H9
N4
M1
M E7
N2
N1

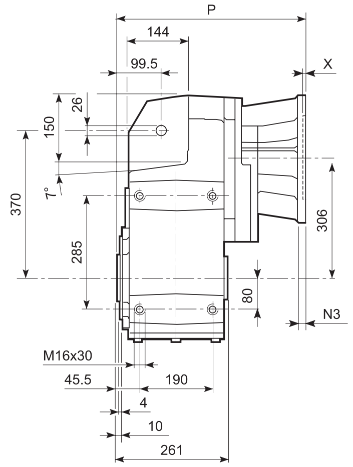
P
144
99.5
X
26
150
370
7°
285
306
80
N3
M16x30
45.5
190
4
10
261

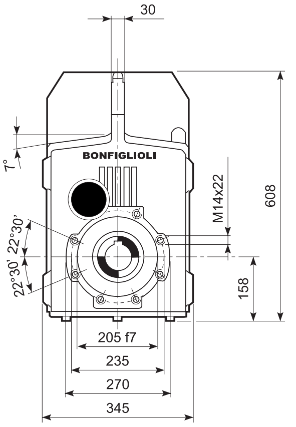
30
BONFIGLIOLI
7°
M14x22
608
22°30'
22°30'
22°30'
158
205 f7
235
270
345

		M	M1	M2	N	N1	N2	N3	N4	X	P	Kg
F 70 3	**P80**	19	21.8	6	200	165	130	—	M10x14.5	4	387.5	167
F 70 3	**P90**	24	27.3	8	200	165	130	—	M10x14.5	4	387.5	167
F 70 3	**P100**	28	31.3	8	250	215	180	—	M12x16	4.5	397.5	171
F 70 3	**P112**	28	31.3	8	250	215	180	—	M12x16	4.5	397.5	171
F 70 3	**P132**	38	41.3	10	300	265	230	16	14	5	434	173
F 70 3	**P160**	42	45.3	12	350	300	250	23	18	6	489.5	185
F 70 3	**P180**	48	51.8	14	350	300	250	23	18	6	489.5	185
F 70 3	**P200**	55	59.3	16	400	350	300	—	M16x25	7	514.5	206
F 70 4	**P63**	11	12.8	4	140	115	95	—	M8x19	4	419	168
F 70 4	**P71**	14	16.3	5	160	130	110	—	M8x16	4.5	419	168
F 70 4	**P80**	19	21.8	6	200	165	130	—	M10x14.5	4	438.5	170
F 70 4	**P90**	24	27.3	8	200	165	130	—	M10x14.5	4	438.5	170
F 70 4	**P100**	28	31.3	8	250	215	180	—	M12x16	4.5	446.5	174
F 70 4	**P112**	28	31.3	8	250	215	180	—	M12x16	4.5	446.5	174
F 70 4	**P132**	38	41.3	10	300	265	230	16	14	5	482	176

F 70...HS

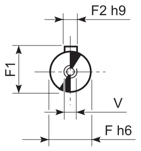
F2 h9
F1
V
F h6

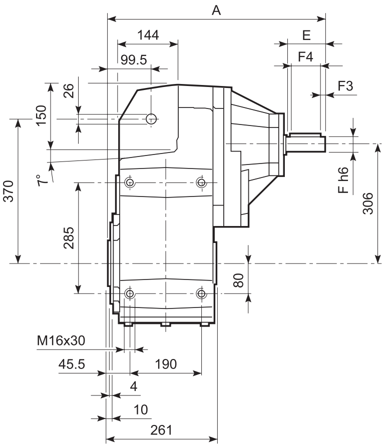
A
144
E
99.5
F4
F3
26
150
370
7°
F h6
306
285
80
M16x30
45.5
190
4
10
261

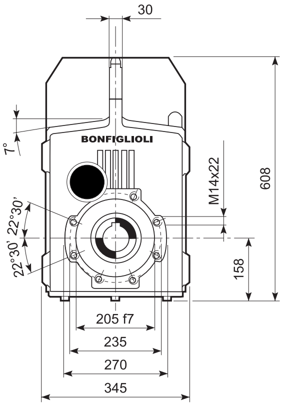
30
BONFIGLIOLI
7°
M14x22
608
22°30'
22°30'
22°30'
158
205 f7
235
270
345

		A	E	F	F1	F2	F3	F4	V	Kg
F 70 3	**HS**	572	110	42	45	12	10	90	M12x28	186
F 70 4		508.5	50	24	27	8	2.5	45	M8x19	174

F 70

F 70...H

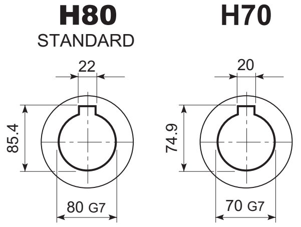
H80
STANDARD
22
85.4
80 G7
H70
20
74.9
70 G7

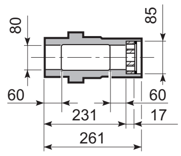
80
85
60
231
60
17
261

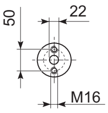

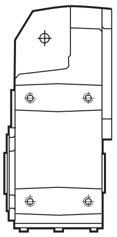

F 70...S

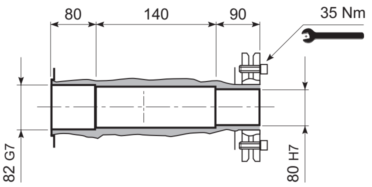
80
140
90
35 Nm
82 G7
80 H7

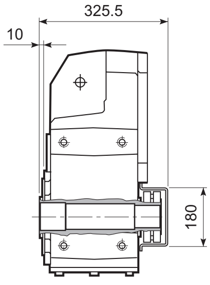

F 70...R

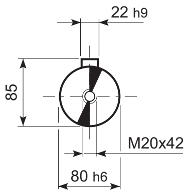
22 h9
85
M20x42
80 h6

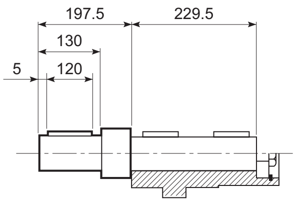
197.5
229.5
130
5
120

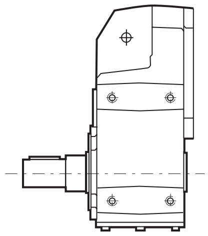

F 70...F...

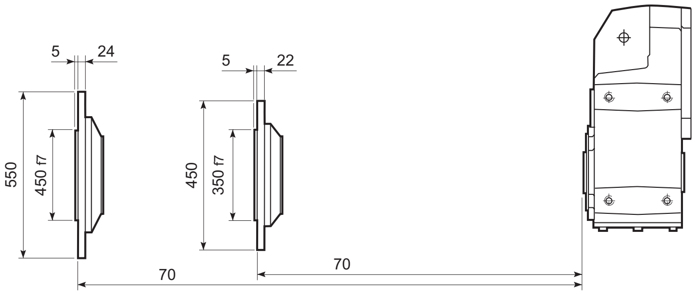
5
24
550
450 f7
5
22
450
350 f7
70
70

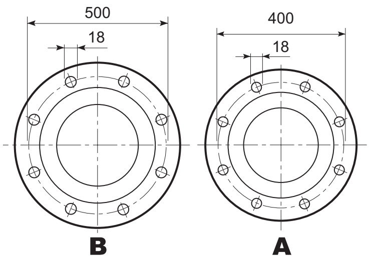
500
18
400
18
B
A

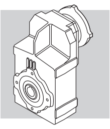

F 80...M

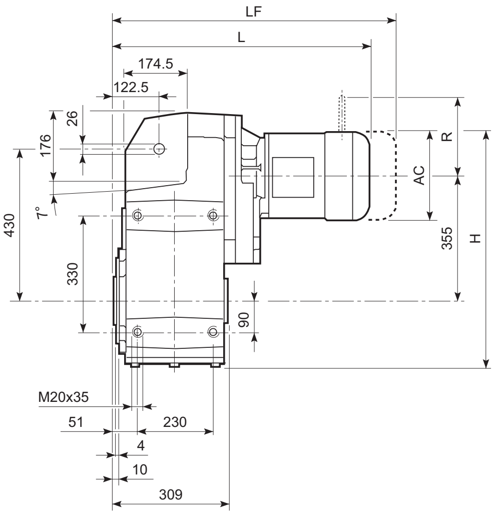
LF
L
174.5
122.5
26
176
7°
430
330
R
AC
355
H
90
M20x35
51
230
4
10
309

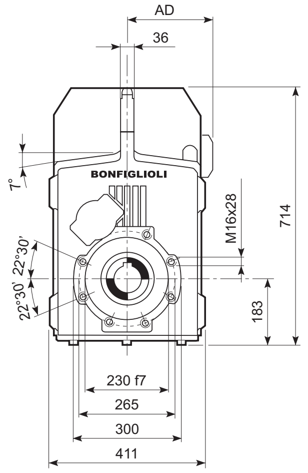
AD
36
7°
BONFIGLIOLI
M16x28
714
22°30'
22°30'
22°30'
183
230 f7
265
300
411

								M...FD M...FA		M...FD		M...FA	
			AC	H	L	AD	Kg	LF	Kg	R	AD	R	AD
F 80 3	**S3**	**M3S**	195	635.5	653	142	266	749	273	160	158	160	142
F 80 3	**S3**	**M3L**	195	635.5	685	142	273	776	280	160	158	160	142
F 80 3	**S4**	**M4**	258	667	793	193	307	902	325	226	210	217	193
F 80 3	**S4**	**M4LC**	258	667	828	193	315	927	333	226	210	217	193
F 80 3	**S5**	**M5S**	310	693	879.5	245	335	1019.5	365	266	245	247	245
F 80 3	**S5**	**M5L**	310	693	923.5	245	351	1063.5	381	266	245	247	245
F 80 4	**S1**	**M1**	138	607	644	108	262	705	265	103	135	124	108
F 80 4	**S2**	**M2S**	156	616	673	119	266	743	269	129	146	134	119
F 80 4	**S3**	**M3S**	195	635.5	716	142	271	812	278	160	158	160	142
F 80 4	**S3**	**M3L**	195	635.5	748	142	278	839	285	160	158	160	142
F 80 4	**S4**	**M4**	258	667	856	193	312	965	330	226	210	217	193
F 80 4	**S4**	**M4LC**	258	667	891	193	320	990	338	226	210	217	193

F 80...P(IEC)

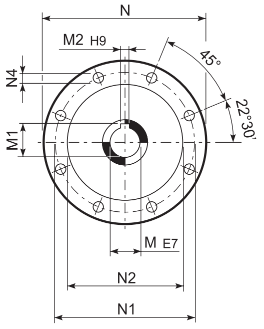
N
M2 H9
N4
45°
22°30'
M1
M E7
N2
N1

INPUT
P225

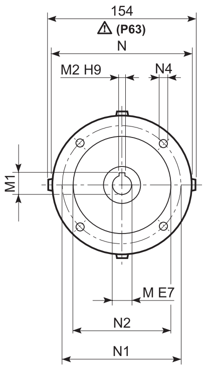
154
⚠ (P63)
N
M2 H9
N4
M1
M E7
N2
N1

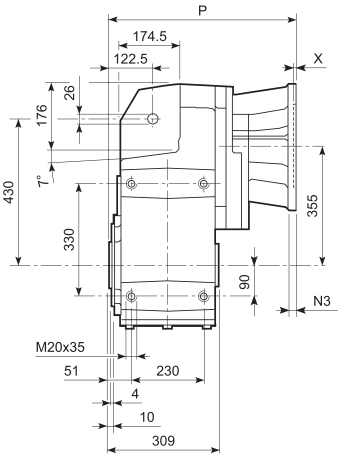
P
174.5
122.5
X
26
176
7°
430
330
355
90
N3
M20x35
51
230
4
10
309

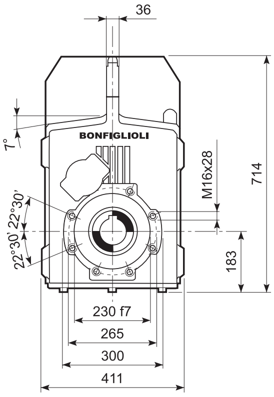
36
7°
BONFIGLIOLI
M16x28
714
22°30'
22°30'
22°30'
183
230 f7
265
300
411

		M	M1	M2	N	N1	N2	N3	N4	X	P	Kg
F 80 3	**P80**	19	21.8	6	200	165	130	—	M10x14.5	4	445.5	255
F 80 3	**P90**	24	27.3	8	200	165	130	—	M10x14.5	4	445.5	255
F 80 3	**P100**	28	31.3	8	250	215	180	—	M12x16	4.5	455.5	259
F 80 3	**P112**	28	31.3	8	250	215	180	—	M12x16	4.5	455.5	259
F 80 3	**P132**	38	41.3	10	300	265	230	16	14	5	492	261
F 80 3	**P160**	42	45.3	12	350	300	250	23	18	6	547.5	276
F 80 3	**P180**	48	51.8	14	350	300	250	23	18	6	547.5	276
F 80 3	**P200**	55	59.3	16	400	350	300	—	M16x25	7	572.5	298
F 80 3	**P225**	60	64.4	18	450	400	350	25	18	6	618	298
F 80 4	**P63**	11	12.8	4	140	115	95	—	M8x19	4	489	258
F 80 4	**P71**	14	16.3	5	160	130	110	—	M8x16	4.5	489	258
F 80 4	**P80**	19	21.8	6	200	165	130	—	M10x14.5	4	508.5	260
F 80 4	**P90**	24	27.3	8	200	165	130	—	M10x14.5	4	508.5	260
F 80 4	**P100**	28	31.3	8	250	215	180	—	M12x16	4.5	518.5	264
F 80 4	**P112**	28	31.3	8	250	215	180	—	M12x16	4.5	518.5	264
F 80 4	**P132**	38	41.3	10	300	265	230	16	14	5	552	266

F 80...HS

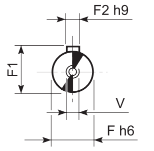
F2 h9
F1
V
F h6

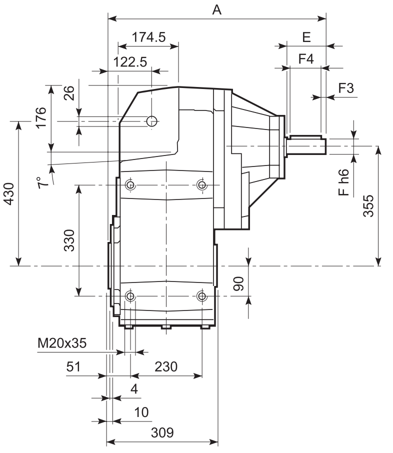
A
174.5
E
122.5
F4
F3
26
176
7°
430
330
F h6
355
90
M20x35
51
230
4
10
309

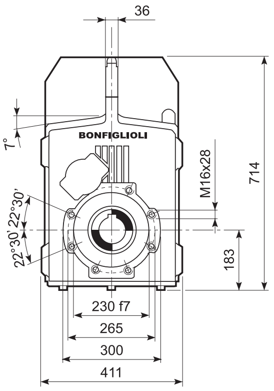
36
7°
BONFIGLIOLI
M16x28
714
22°30'
22°30'
22°30'
183
230 f7
265
300
411

		A	E	F	F1	F2	F3	F4	V	Kg
F 80 3	**HS**	630	110	42	45	12	10	90	M12x28	273
F 80 4		575.5	50	24	27	8	2.5	45	M8x19	263

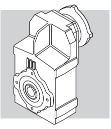

F 80

F 80...H

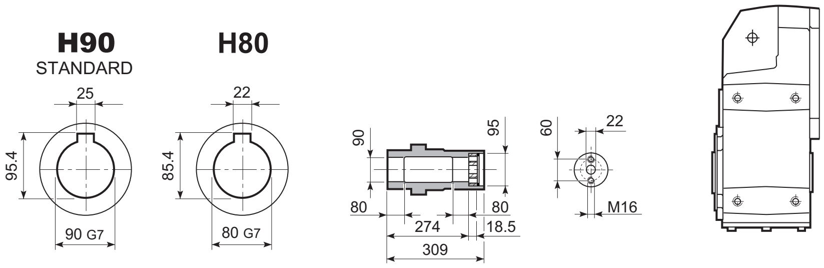
H90
STANDARD
H80
25
95.4
90 G7
22
85.4
80 G7
90
95
80
274
80
18.5
309
60
22
M16

F 80...S

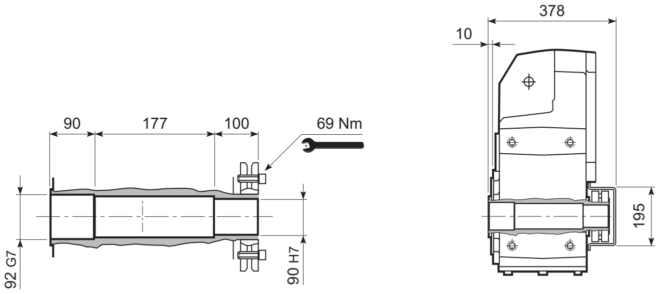
378
10
90
177
100
69 Nm
92 G7
90 H7
195

F 80...R

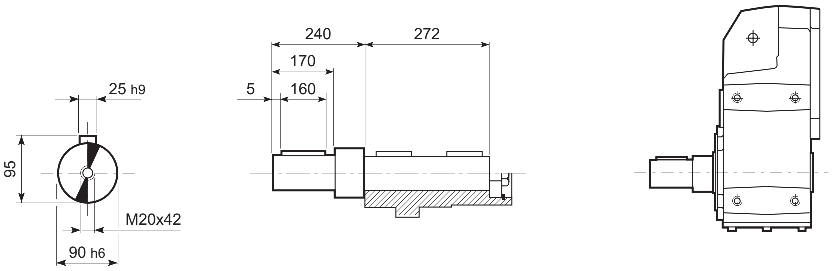
25 h9
95
M20x42
90 h6
240
272
170
5
160

F 80...F...

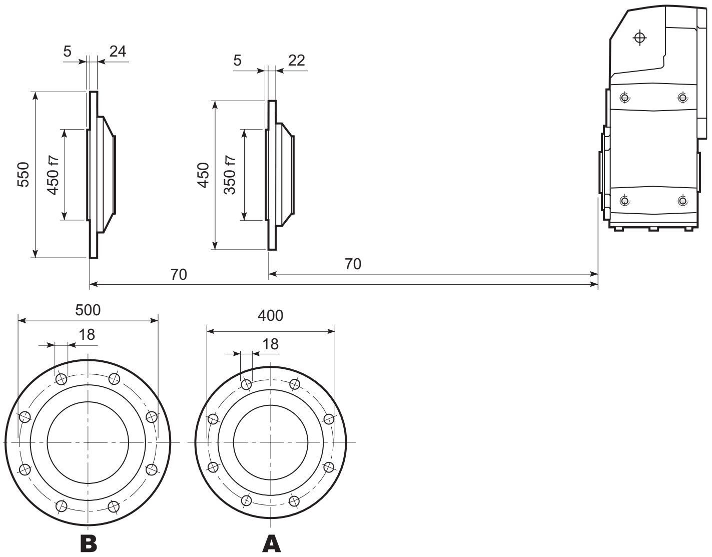
5
24
550
450 f7
5
22
450
350 f7
70
70
500
18
400
18
B
A

F 90...M

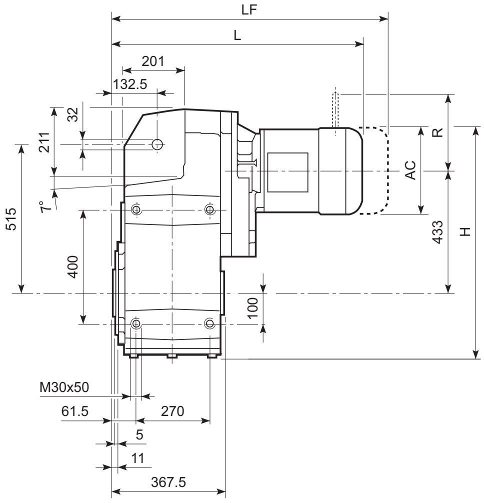
LF
L
201
132.5
32
211
515
7°
400
100
AC
R
433
H
M30x50
61.5
270
5
11
367.5

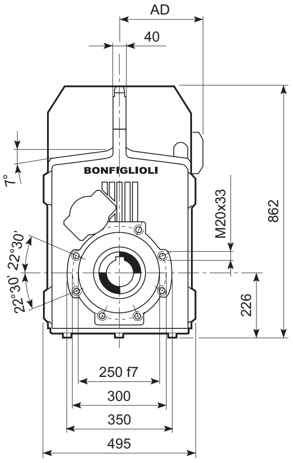
AD
40
7°
BONFIGLIOLI
M20x33
862
22°30'
22°30'
226
250 f7
300
350
495

								M...FD M...FA		M...FD		M...FA	
			AC	H	L	AD	Kg	LF	Kg	R	AD	R	AD
F 90 3	**S3**	**M3S**	195	756	728	142	453	824	460	160	158	160	142
F 90 3	**S3**	**M3L**	195	756	760	142	460	851	467	160	158	160	142
F 90 3	**S4**	**M4**	258	787.5	868	193	494	977	512	226	210	217	193
F 90 3	**S5**	**M5L**	310	813.5	998.5	245	538	1138.5	568	266	245	247	245
F 90 4	**S2**	**M2S**	156	736.5	768	119	456	838	460	129	146	134	119
F 90 4	**S3**	**M3S**	195	756	811	142	460	907	468	160	158	160	142
F 90 4	**S3**	**M3L**	195	756	843	142	468	934	475	160	158	160	142
F 90 4	**S4**	**M4**	258	787.5	951	193	502	1060	520	226	210	217	193
F 90 4	**S4**	**M4LC**	258	787.5	986	193	510	1085	528	226	210	217	193

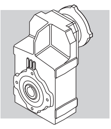

F 90...P(IEC)

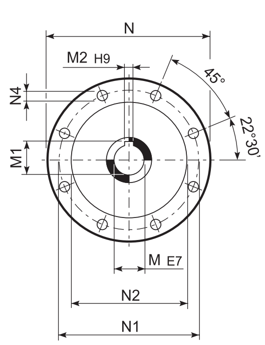
N
M2 H9
45°
22°30'
N4
M1
M E7
N2
N1

INPUT
P225...P250

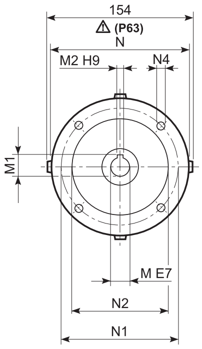
154
(P63)
N
M2 H9
N4
M1
M E7
N2
N1

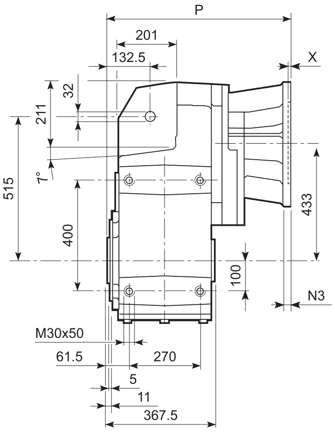
P
201
132.5
X
32
211
7°
515
400
433
100
N3
M30x50
61.5
270
5
11
367.5

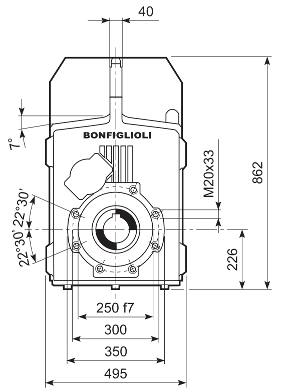
40
BONFIGLIOLI
7°
M20x33
862
22°30' 22°30'
226
250 f7
300
350
495

		M	M1	M2	N	N1	N2	N3	N4	X	P	Kg
F 90 3	**P80**	19	21.8	6	200	165	130	—	M10x14.5	4	520.5	442
F 90 3	**P90**	24	27.3	8	200	165	130	—	M10x14.5	4	520.5	442
F 90 3	**P100**	28	31.3	8	250	215	180	—	M12x16	4.5	530.5	446
F 90 3	**P112**	28	31.3	8	250	215	180	—	M12x16	4.5	530.5	446
F 90 3	**P132**	38	41.3	10	300	265	230	16	14	5	567	449
F 90 3	**P160**	42	45.3	12	350	300	250	23	18	6	622.5	463
F 90 3	**P180**	48	51.8	14	350	300	250	23	18	6	622.5	463
F 90 3	**P200**	55	59.3	16	400	350	300	—	M16x25	7	647.5	485
F 90 3	**P225**	60	64.4	18	450	400	350	30	18	6	693	485
F 90 3	**P250**	65	69.4	18	550	500	450	30	18	6	723	507
F 90 4	**P63**	11	12.8	4	140	115	95	—	M8x19	4	584	448
F 90 4	**P71**	14	16.3	5	160	130	110	—	M8x16	4.5	584	448
F 90 4	**P80**	19	21.8	6	200	165	130	—	M10x14.5	4	603.5	450
F 90 4	**P90**	24	27.3	8	200	165	130	—	M10x14.5	4	603.5	450
F 90 4	**P100**	28	31.3	8	250	215	180	—	M12x16	4.5	613.5	454
F 90 4	**P112**	28	31.3	8	250	215	180	—	M12x16	4.5	613.5	454
F 90 4	**P132**	38	41.3	10	300	265	230	16	14	5	650	455
F 90 4	**P160**	42	45.3	12	350	300	250	23	18	5.5	700.5	461
F 90 4	**P180**	48	51.8	14	350	300	250	23	18	5.5	700.5	461

F 90...HS

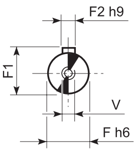
F2 h9
F1
V
F h6

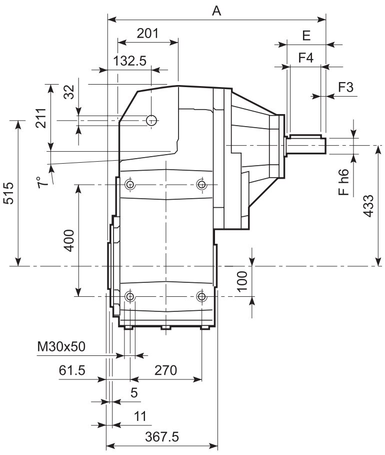
A
201
E
132.5
F4
F3
32
211
F h6
7°
515
433
400
100
M30x50
61.5
270
5
11
367.5

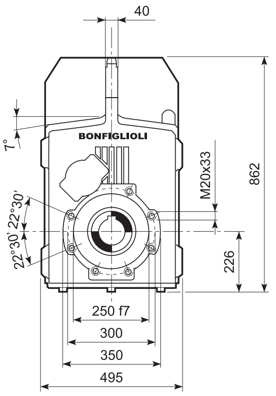
40
BONFIGLIOLI
7°
M20x33
862
22°30' 22°30'
226
250 f7
300
350
495

		A	E	F	F1	F2	F3	F4	V	Kg
F 90 3	**HS**	806.5	140	60	64	18	10	120	M16x36	485
F 90 4		673.5	50	24	27	8	2.5	45	M8x19	452

F 90

F 90...H

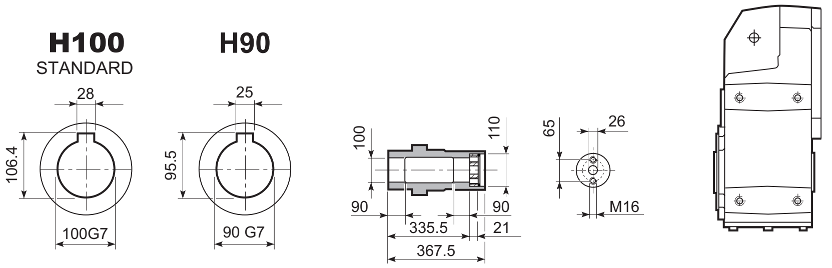
H100
STANDARD
28
106.4
100G7
H90
25
95.5
90 G7
100
110
90
335.5
90
21
367.5
65
26
M16

F 90...S

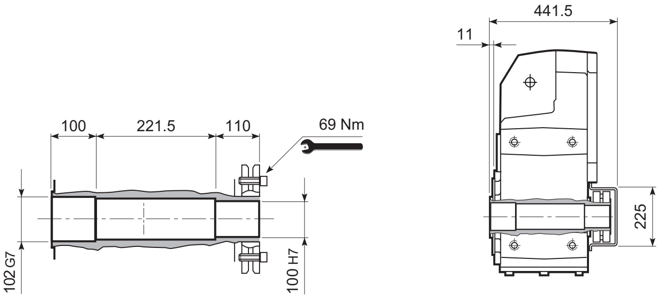
441.5
11
100
221.5
110
69 Nm
102 G7
100 H7
225

F 90...R

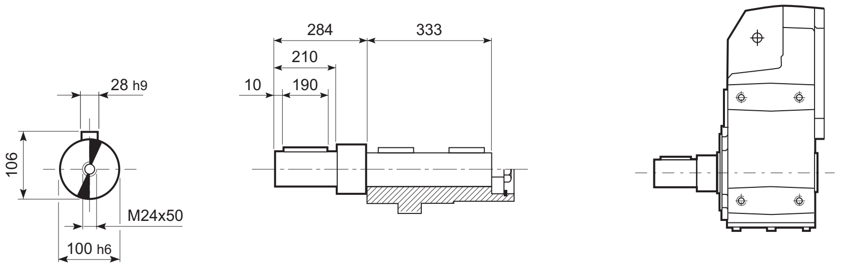
28 h9
106
M24x50
100 h6
284
333
210
10
190

F 90...F...

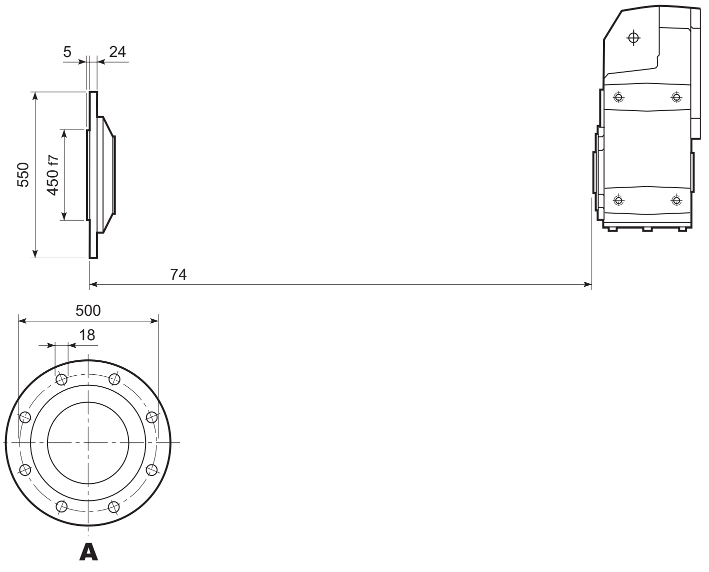
5
24
550
450 f7
74
500
18
A

65 ZUBEHÖR

Schwingungsdämpfung

Die Getriebe der Serie F können auf Anfrage mit einem Satz Schwingungsdämpfern gelifert werden. Dieser Satz enthält die für die Aufsteckbefestigung erforderlichen Komponenten (ausgenommen der Drehmomentstütze).
Die Abmessungen sind in der folgenden Tabelle ersichtlich.

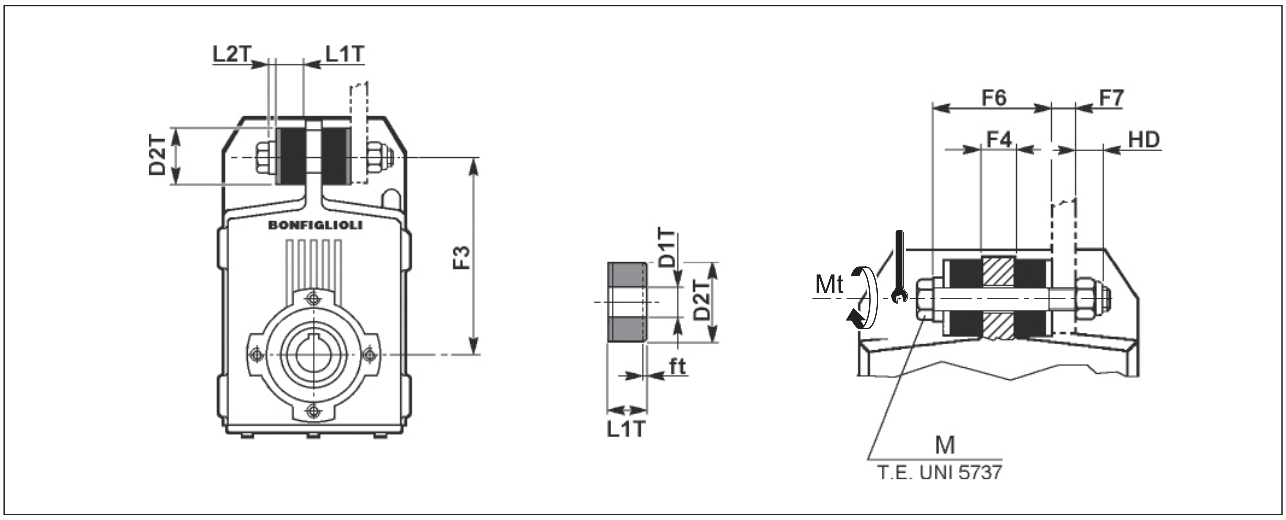

	F3	F4	F6	F7 (max.)	HD	L1T	L2T	D1T	D2T	M	Mt [Nm]	ft
F 10	140	20	55	10	12.3	15	5	11	30	M10x80	10	1.5
F 20	160	20	55	10	12.3	15	5	11	30	M10x80	10	1.5
F 25	162	20	65	20	14.8	20	5	12.5	40	M12x100	20	1.5
F 31	170	20	65	20	14.8	20	5	12.5	40	M12x100	20	1.5
F 41	218	16	61	24	14.8	20	5	12.5	40	M12x100	20	2.3
F 51	278	20	90	47	23	30	10	21	60	M20x160	50	3.0
F 60	325	26	96	41	23	30	10	21	60	M20x160	50	4.0
F 70	370	30	122	50	28	40	12	25	80	M24x200	100	4.0
F 80	430	36	128	44	28	40	12	25	80	M24x200	100	6.0
F 90	515	40	175	40	33.2	60	15	32	100	M30x260	200	9.0

f_t= Stauchung des Gummipuffers unter Nennlast.

66 MASCHINENACHSE

Die angetriebene und mit dem Getriebe verbundene Welle sollte aus hochwertigem Stahl gemäß den Abmessungen der Tabelle gefertigt werden.

Darüber hinaus sollte die Welle axial gesichert werden, siehe folgendes Beispiel. Hierbei die einzelnen Komponenten in Abhängigkeit der verschiedenen Anwendungserfordernisse überprüfen und dimensionieren.

H

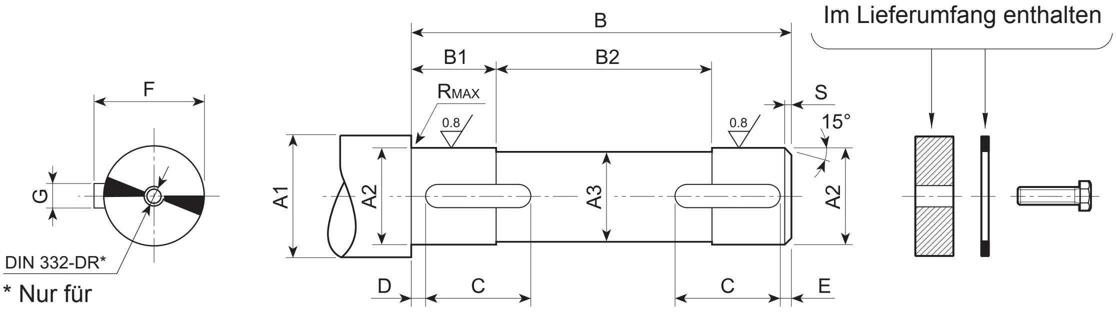

* Nur für
F 51: M14x31

	A1	A2	A3	B	B1	B2	C	D	E	F	G	R	S	UNI 6604	UNI 5739
F 10	≥ 35	30 h7	29	87.5	15.5	56.5	20	2	2	33	8 h9	0.5	1.5	8x7x20 A	M8x25
	≥ 30	25 h7	24	87.5	15.5	56.5	20	2	2	28	8 h9	0.5	1.5	8x7x20 A	
F 20	≥ 42	35 h7	34	99	18	63	22	2	2	38	10 h9	0.5	1.5	10x8x22 A	M8x30
	≥ 35	30 h7	29	99	18	63	22	2	2	33	8 h9	0.5	1.5	8x7x22 A	
F 25	≥ 47	40 h7	39	104	23	58	30	2	2	43	12 h9	0.5	1.5	12x8x30 A	M8x30
	≥ 42	35 h7	34	104	23	58	30	2	2	38	10 h9	0.5	1.5	10x8x30 A	
F 31	≥ 47	40 h7	39	104	28	48	30	2	2	43	12 h9	0.5	1.5	12x8x30 A	M8x30
	≥ 42	35 h7	34	104	28	48	30	2	2	38	10 h9	0.5	1.5	10x8x30 A	
F 41	≥ 52	45 h7	44	118	27.5	63	45	2.5	2.5	48.5	14 h9	1	2.0	14x9x45 A	M10x30
	≥ 47	40 h7	39	118	27.5	63	45	2.5	2.5	43	12 h9	1	2.0	12x8x45 A	
F 51	≥ 63	55 h7	54	139	33	73	50	2.5	2.5	59	16 h9	1	2.0	16x10x50 A	M14x45
	≥ 57	50 h7	49	139	33	73	50	2.5	2.5	53.5	14 h9	1	2.0	14x9x50 A	
F 60	≥ 78	70 h7	69	180	38	104	70	2.5	2.5	74.5	20 h9	1	2.0	20x12x70 A	M16x45
	≥ 68	60 h7	59	180	38	104	70	2.5	2.5	64	18 h9	1	2.0	18x11x70 A	
F 70	≥ 89	80 h7	79	229	58	113	75	3	3	85	22 h9	2.5	2.5	22x14x75 A	M20x55
	≥ 78	70 h7	69	229	58	113	75	3	3	74.5	20 h9	2.5	2.5	20x12x75 A	
F 80	≥ 99	90 h7	89	272	78	116	100	3	3	95	25 h9	2.5	2.5	25x14x100 A	M20x55
	v 89	80 h7	79	272	78	116	100	3	3	85	22 h9	2.5	2.5	22x14x100 A	
F 90	≥ 111	100 h7	99	333	87.5	158	110	3	3	106	28 h9	2.5	2.5	28x16x110 A	M24x65
	≥ 99	90 h7	89	333	87.5	158	110	3	3	95	25 h9	2.5	2.5	25x14x110 A	

S

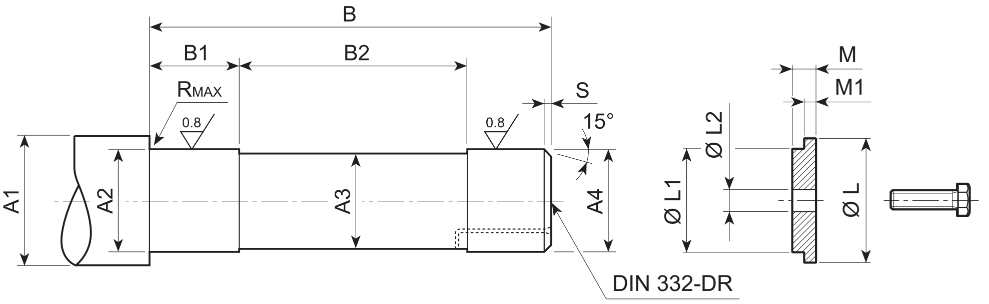

	A1	A2	A3	A4	B	B1	B2	R	S	L	L1	L2	M	M1	UNI 5739
F 10	≥ 36	27 h7	24	25 h6	138	34	70	0.5	1.5	29.5	25 d9	9	7	5.5	M8x25
F 20	≥ 42	32 h7	29	30 h6	160	38	84	0.5	1.5	35.5	30 d9	9	7	5.5	M8x25
F 25	≥ 42	32 h7	30	31 h6	172	38	96	0.5	1.5	35.5	31 d9	9	7	5.5	M8x25
F 31	≥ 50	38 h7	35	36 h6	155	40	73	1	2	43	36 d9	9	7	5.5	M8x25
F 41	≥ 58	44 h7	41	42 h6	177	46.5	82	1	2	49	42 d9	11	8.5	7	M10x30
F 51	≥ 68	54 h7	51	52 g6	201	48	91	1	2	61	52 d9	18	9	7.5	M16x45
F 60	≥ 84	67 h7	64	65 g6	248	53	133	1.5	2	80	65 d9	18	9	7.5	M16x45
F 70	≥ 104	82 h7	79	80 g6	308	78	140	2.5	2.5	95	80 d9	22	13.5	12	M20x55
F 80	≥ 114	92 h7	89	90 g6	365	88	177	2.5	2.5	105	90 d9	22	13.5	12	M20x55
F 90	≥ 126	102 h7	99	100 g6	429.5	98	221.5	2.5	2.5	120	100 d9	26	20	18.5	M24x70

QF

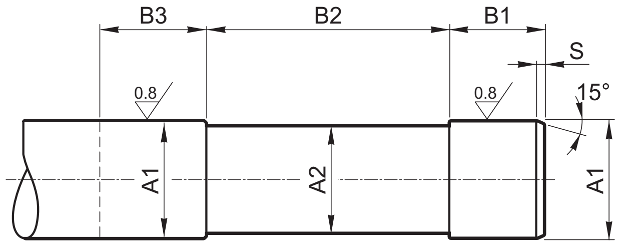

		A1	A2	B1	B2	B3	S
F 10	**QF25**	25 h6	24	41	83	≥ 50	1.5
	QF30	30 h6	29				
F 20	**QF25**	25 h6	24	41	104.5	≥ 50	1.5
	QF30	30 h6	29				
F 25	**QF30**	30 h6	29	41	120.5	≥ 50	1.5
	QF32	32 h6	31				
F 31	**QF35**	35 h6	34	45	95.5	≥ 54	1.5
	QF40	40 h6	39				
F 41	**QF42**	42 h6	41	46	112.5	≥ 55	2
	QF45	45 h6	44				
F 51	**QF50**	50 h6	49	48	131	≥ 57	2
	QF55	55 h6	54				
F 60	**QF60**	60 h6	59	57	158	≥ 66	2.5
	QF65	65 h6	64				
	QF70	70 h6	69				

67 KONSTRUKTIVE EIGENSCHAFTEN

Die wichtigsten konstruktiven Eigenschaften sind:

- Baueinheitensystem
- Kompaktheit
- hohe Wirkungsgrade
- niedriger Geräuschpegel
- einsatzgehärtete und gehärtete Zahnräder aus legiertem Stahl
- Nicht lackierte Aluminiumgehäuse bei den Größen 10, 20 und 30; hochwiderstandsfähige und lackierte Gußgehäuse bei den anderen Größen
- Antriebs- und Abtriebswellen aus hochwiderstandsfähigem Stahl.

(E 60)

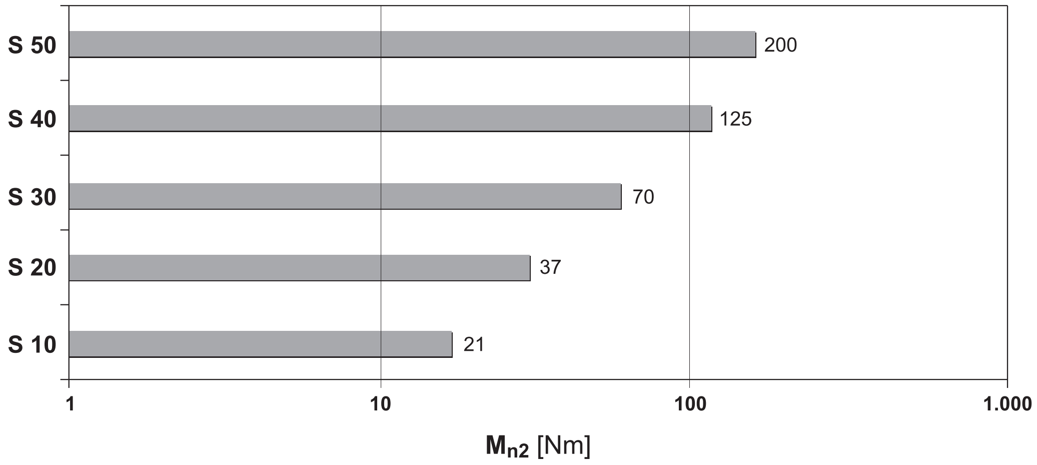

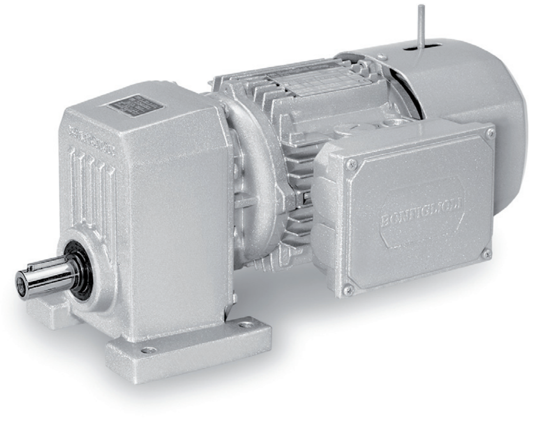

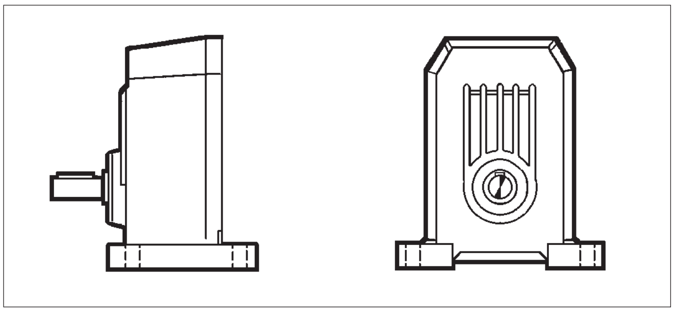

P

Integrierte Füße

S 10 ... S 50

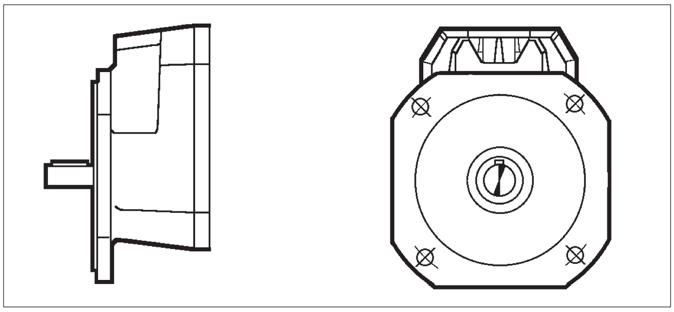

F

Integrierter Flansch

S 10 ... S 50

69 BEZEICHNUNG

GETRIEBE

S 10 1 P 1.4 S1 B3 .....

OPTIONEN

EINBAULAGEN

S...P: **B3** (Standard), **B6**, **B7**, **B8**, **V5**, **V6**
S...F: **B5** (Standard), **B51**, **B52**, **B53**, **V1**, **V3**

BEZEICHNUNG DER ANTRIEBSSEITE

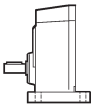

S05	**S3**
S1	**S4**
S2	**S5**

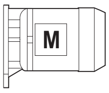

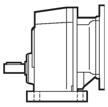

IEC_

P63	**P112**
P71	**P132**
P80	**P160**
P90	**P180**
P100	

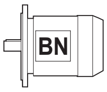

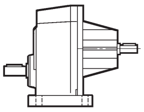

HS

ÜBERSETZUNG

BAUFORM

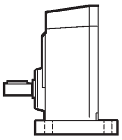

P

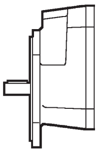

F

GETRIEBESTUFEN
1

GETRIEBEBAUGRÖSSE
10, **20**, **30**, **40**, **50**

TYP: **S** = Stirnradgetriebe-Einstufig

MOTOR | BREMSE

M 1LA 4 230/400-50 IP54 CLF ..... **W FD** 7.5 R SB 220 SA .....

OPTIONEN

BREMSVERSORGUNG

GLEICHRICHTERTYP
AC/DC
NB, **SB**, **NBR**, **SBR**

BREMSENHANDLÜFTUNG
R, **RM**

BREMSMOMENT

BREMSENTYP
FD (G.S. Bremse)
FA (W.S. Bremse)

KLEMMENKASTENLAGE
W (default), **N**, **E**, **S**

BAUFORM
— (Kompaktmotor)
B5 (IEC - Motor)

ISOLIERUNGSKLASSE
CL F Standard
CL H Option

SCHUTZART
IP55 Standard (IP54 - Bremssmotor)

SPANNUNG - FREQUENZ

POLZAHL
2, **4**, **6**, **2/4**, **2/6**, **2/8**, **2/12**, **4/6**, **4/8**

MOTOR-BAUGRÖSSE
0B ... 5LA (Kompaktmotor)
63A ... 280M (IEC - Motor)

MOTORTYP
M = Dreiphasen Kompaktmotor
BN = Dreiphasen IEC Motor

69.1 Getriebe Optionen

SO

Die Getriebetypen S10, S20, S30 und S40, die normalerweise inklusiv Schmiermittel geliefert werden, werden ohne Öl geliefert.

LO

Die Getriebe S50, die gewöhnlich ohne Schmiermittel geliefert werden, werden in Übereinstimmung mit der Einbaulage mit dem standardmäßigen von BONFIGLIOLI RIDUTTORI verwendeten synthetischen Schmierstoff gefüllt.

DV

2 Wellendichtringe auf der eintreibenden Welle. (Nur für Kompaktgetriebemotoren).

VV

Wellendichtringe aus Fluor-Elastomer auf der eintreibenden Welle.

PV

Alle Wellendichtringe aus Fluor-Elastomer.

OBERFLÄCHENSCHUTZ

Wenn keine besondere Korrosionsschutzklasse gefordert ist, ist die lackierte Oberfläche des Getriebes mindestens mit einem Schutz gegen Korrosion der Klasse C2 nach UNI EN ISO 12944-2 geschützt.
Für eine bessere Witterungsbeständigkeit können die Getriebe, durch eine Lackierung des ganzen Getriebes, mit einem Oberflächenschutz der Klassen **C3** und **C4** geliefert werden.

(E 61)

OBERFLÄCHENSCHUTZ	Typische Umgebungen	Maximale Oberflächen-temperatu	Korrosionsschutzklasse nach UNI EN ISO 12944-2
C3	Stadt- und Industrieumgebung mit bis zu 100% relativer Luftfeuchtigkeit (mittlere Luftverschmutzung)	120°C	C3
C4	Industrie- und Küstengebiete und Chemieanlagen mit bis zu 100% relativer Luftfeuchtigkeit (hohe Luftverschmutzung)	120°C	C4

Getriebe mit einem optionalen Korrosionsschutz der Klassen **C3** oder **C4** sind in einer Auswahl von Farben verfügbar. Wenn keine spezielle Farbe gefordert ist, (siehe Option „Lackierung“) ist der Decklack in RAL 7042.
Unsere Getriebe können auch mit Oberflächenschutz der Klasse **C5** nach UNI EN ISO 12944-2 versehen werden. Für weitere technische Informationen wenden Sie bitte an unseren Technischen Service.

LACKIERUNG

Getriebe mit Oberflächenschutz der Klasse C3 oder C4, sind in den, in der folgenden Liste aufgelisteten Farben, verfügbar.

(E 62)

LACKIERUNG	Farbe	RAL Nummer
RAL7042*	Traffic Grey A	7042
RAL5010	Gentian Blue	5010
RAL9005	Jet Black	9005
RAL9006	White Aluminium	9006
RAL9010	Pure White	9010

* Die Getriebe werden in dieser Standardfarbe geliefert, wenn keine andere Farbe angegeben ist.

Hinweis – Die Option “Lackierung” kann nur im Zusammenhang mit dem Oberflächenschutz spezifiziert werden.

NACHWEISE

AC - Konformitätsbescheinigung Dokument mit dessen Ausstellung die Konformität des Produkts mit dem Auftrag, und dessen Konstruktion in Konformität mit den vom Qualitätsmanagementsystem von Bonfiglioli Riduttori vorgesehenen Standardfertigungs- und -kontrollverfahren bescheinigt wird.

CC – Prüfzeugnis
Die Bestellung führt zur Durchführung von Kontrollen der Konformität mit dem Auftrag, allgemeinen Sichtkontrollen und instrumentalen Prüfungen der Passmaße. Des Weiteren werden allgemeine Betriebskontrollen bei Leerlauf sowie Prüfungen der Funktionalität der Dichtungen bei Stillstand und während des Betriebs durchgeführt. Die Prüfung wird anhand einer Stichprobe des Versandloses durchgeführt.

69.2 Optionen Motoren

AL, AR

Für Getriebemotoren mit Kompaktmotor der Baureihe M steht die Option Rücklaufsperre zur Verfügung, welche direkt am Motor installiert ist und im Abschnitt über die Elektromotoren in diesem Katalog beschrieben wird. Die folgende Tabelle zeigt die freie Drehrichtung des Getriebemotors, anhand welcher die Option entsprechend gewählt werden muss.

(E 64)

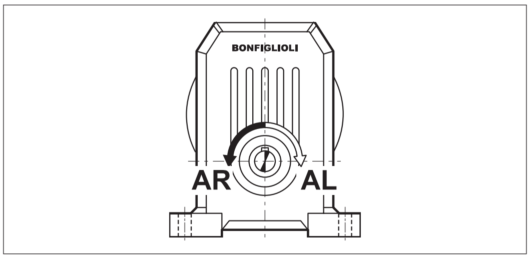

Weitere Informationen zu Optionen, finden Sie im Abschnitt “Elektromotoren”.

70 EINBAULAGEN UND LAGE DES KLEMMENKASTENS

Die Angaben zur Lage des Klemmenkastens beziehen sich auf das von der Lüfterseite her betrachtete Getriebe. Die Standardorientierung ist schwarz hervorgehoben (W).

Winkellage des Handlüfterhebels.

Bei Bremsmotoren wird der Handlüfterhebel (auf Anfrage) standardmäßig auf 90° gegenüber des Klemmkastens (AB-Anordnung) geliefert; wird eine andere Anordnung verlangt, muß dies bei der Bestellung durch die geeignete Option angegeben werden.

(E 63)

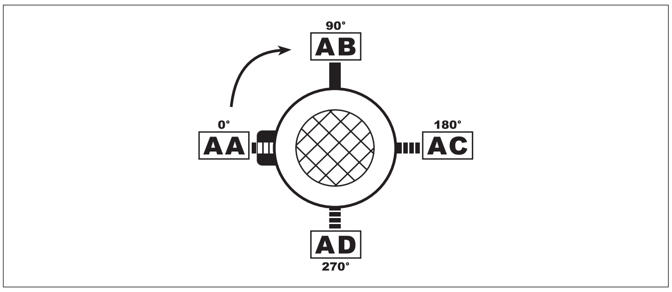

S ... P

B3

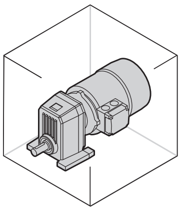

_S

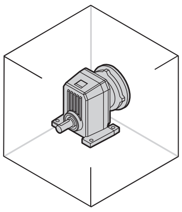

_P(IEC)

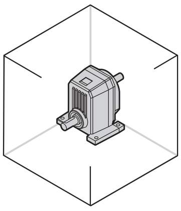

_HS

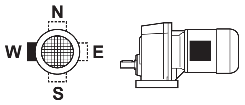

B7

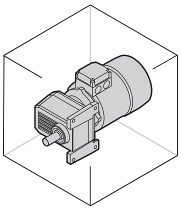

_S

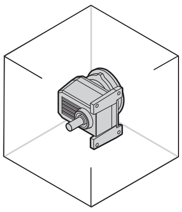

_P(IEC)

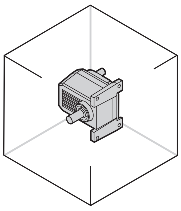

_HS

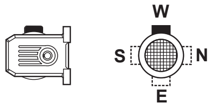

V5

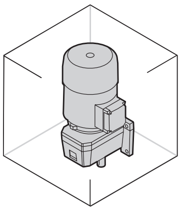

_S

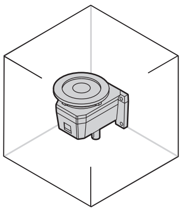

_P(IEC)

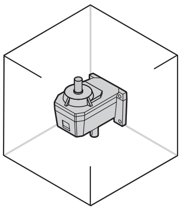

_HS

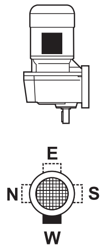

B6

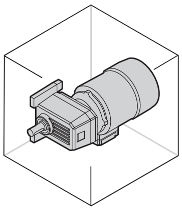

_S

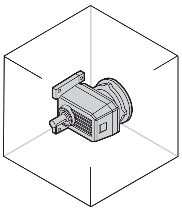

_P(IEC)

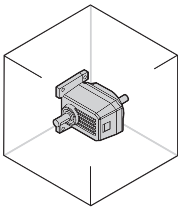

_HS

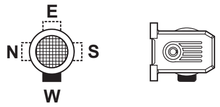

B8

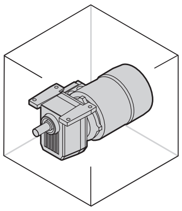

_S

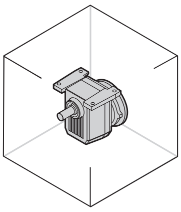

_P(IEC)

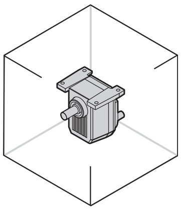

_HS

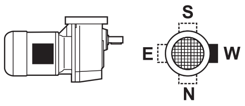

V6

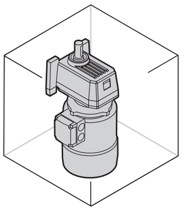

_S

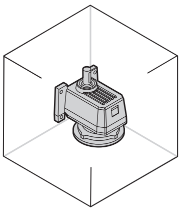

_P(IEC)

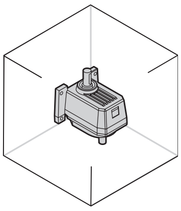

_HS

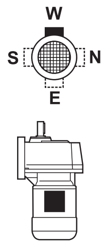

W = Default

S ... F

B5

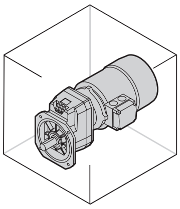

_S

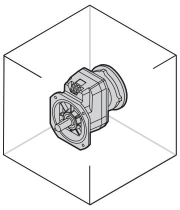

_P(IEC)

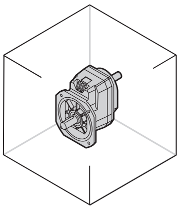

_HS

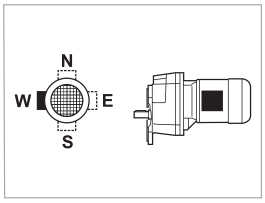

B51

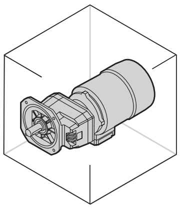

_S

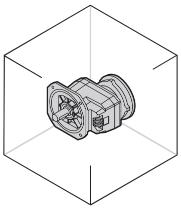

_P(IEC)

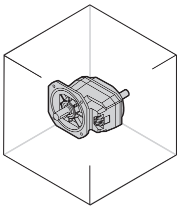

_HS

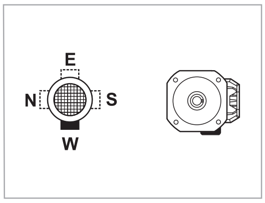

B53

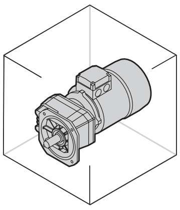

_S

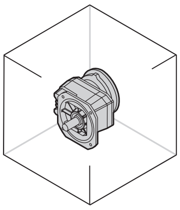

_P(IEC)

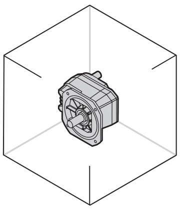

_HS

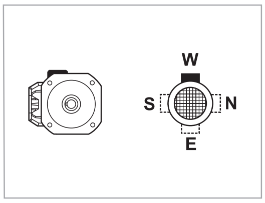

B52

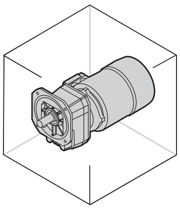

_S

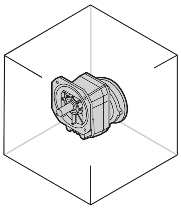

_P(IEC)

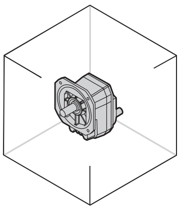

_HS

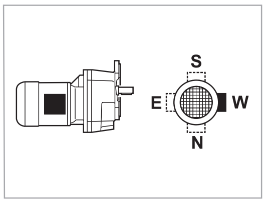

V1

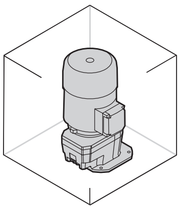

_S

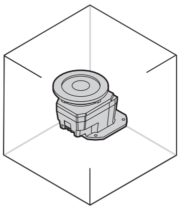

_P(IEC)

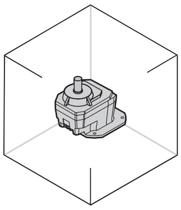

_HS

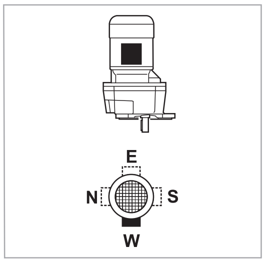

V3

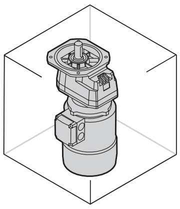

_S

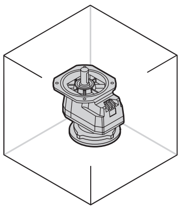

_P(IEC)

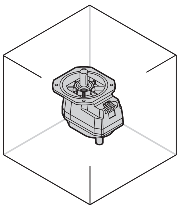

_HS

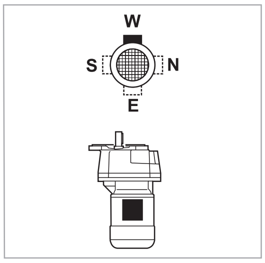

W = Default

71 RADIALKRÄFTE

Die mit den Antriebs- und/oder Abtriebswellen des Getriebes verbundenen Antriebsorgane bilden Kräfte, die in radiale Richtung auf die Welle selbst wirken.

Das Ausmaß dieser Kräfte muß mit der Festigkeit des Systems aus Getriebewelle/-lager kompatibel sein, insbesondere muß der absolute Wert der auftretenden Belastung (R_{c1} für Antriebswelle und R_{c2} für Abtriebswelle) unter dem in den Tabellen der Technischen Daten angegebenen Nennwert (R_{n1} für Antriebswelle und R_{n2} für Abtriebswelle) liegen.

In den nachstehenden Formeln bezieht sich die Angabe (1) auf die Maße der Antriebswelle, die Angabe (2) auf die Abtriebswelle.

Die von einem externen Antrieb erzeugte Kraft kann, recht genau, anhand der nachstehenden Formel berechnet werden:

$$R_{c1}\left[N\right]=\frac{2000\cdot M_1\left[Nm\right]\cdot K_r}{d\left[mm\right]} \quad ; \quad R_{c2}\left[N\right]=\frac{2000\cdot M_2\left[Nm\right]\cdot K_r}{d\left[mm\right]} \qquad (44)$$

(E 65)

M_1 [Nm]	Drehmoment an der Antriebswelle
M_2 [Nm]	Drehmoment an der Abtriebswelle
d [mm]	Teilkreisdurchmesser des Bauteils, das auf der Abtriebswelle montiert ist
K_r = 1	Kettenantrieb

K_r = 1,25	Zahnradantrieb
K_r = 1,5	Antrieb über Keilriemen
K_r = 2,0	Antrieb über Flachriemen

In Abhängigkeit zum Kraftanangriffspunkt an der Welle erfolgt die Kontrolle hinsichtlich der Kompatibilität in unterschiedlicher Weise und insbesondere:

(E 66)

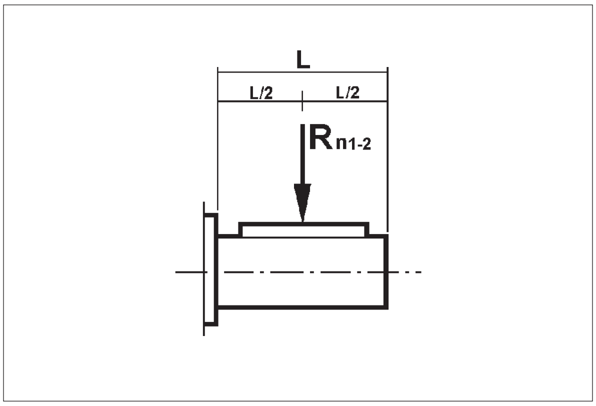

(E 67)

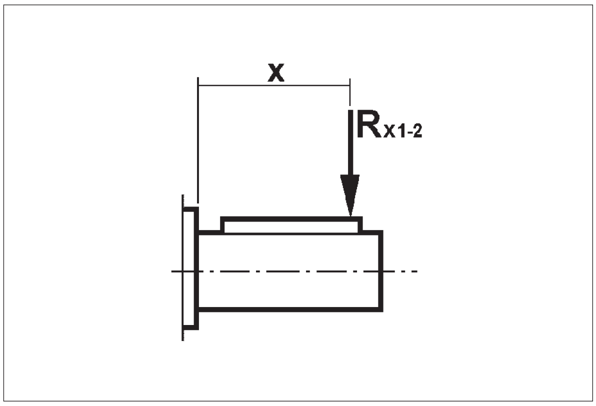

a) Kraftangriffspunkt in der Mitte, Tab. (E66)

Der zuvor errechnete Wert muß mit dem im Katalog angegebenen Nennwert verglichen werden. Es muß sich folgendes ergeben:

Rc1 ≤ Rn1   [Antriebswelle]

oder

Rc2 ≤ Rn2   [Abtriebswelle]

b) Von der Mitte versetzter Kraftangriffspunkt Tab. (E67)

Der auf einer Distanz “x” vom Wellenansatz liegende Kraftangriffspunkt erfordert eine erneute Berechnung des für diesen Abstand zulässigen Werts.
Der neue Wert wird mit den Symbolen Rx1 (Antrieb) und Rx2 (Abtrieb) gekennzeichnet und unter Anwendung der nachstehenden Faktorenberechnung aus den Katalog- werten Rn1 und Rn2:

$$\boxed{\frac{a}{b+x}} \qquad (45)$$

(E 68)

	Getriebekonstanten					
	Abtriebswelle			Antriebswelle		
	a	**b**	**c**	**a**	**b**	**c**
S 10 1	61	46	200	21	1	300
S 20 1	73.5	53.5	270	40	20	350
S 30 1	91.5	66.5	380	38.5	18.5	350
S 40 1	126.5	96.5	600	49.5	24.5	450
S 50 1	153.5	113.5	680	49.5	24.5	450

Das Kontrollverfahren zieht die nachstehend beschriebenen Schritte nach sich.

ANTRIESBWELLE

1. Berechnung von:

$$\boxed{R_{x1} = R_{n1} \cdot \frac{a}{b+x}} \qquad (46)$$

HINWEIS unter der Bedingung, daß:

$$\boxed{\frac{L}{2} \leq x \leq c} \qquad (47)$$

Dies als Voraussetzung, muß sich folgendes ergeben:

$$R_{c1} \leq R_{x1} \tag{48}$$

ABTRIEBSWELLE

1. Berechnung von:

$$R_{x2} = R_{n2} \cdot \frac{a}{b+x} \tag{49}$$

HINWEIS unter der Bedingung, daß:

$$\frac{L}{2} \leq x \leq c \tag{50}$$

Dies als Voraussetzung, muß sich folgendes ergeben:

$$R_{c2} \leq R_{x2} \tag{51}$$

72 AXIALKRÄFTE, A_{n1}, A_{n2}

Die Werte der zulässigen, auf die Antriebswelle [A_{n1}] und auf die Abtriebswelle [A_{n2}] einwirkenden Axialkräfte können unter Bezugnahme auf den jeweiligen Wert der Radialkraft [R_{n1}] und [R_{n2}] anhand der nachstehenden Angaben berechnet werden:

$$\begin{aligned} A_{n1} &= R_{n1} \cdot 0.2 \\ A_{n2} &= R_{n2} \cdot 0.2 \end{aligned} \tag{52}$$

Die so errechneten Werte der zulässigen Axialkräfte beziehen sich auf den Fall, in dem die Axialkräfte gleichzeitig mit den Nennradialkräften auftreten.
Nur im Fall, dass keine Radialbelastung auf die Getriebewelle wirkt, ist der Wert der zulässigen Axialbelastung [A_n] gleich 50% der zulässigen Radialbelastung [R_n] bezogen auf die gleiche Welle.
Bei sehr hohen Axialkräften oder stark erhöhten Radialkräften, wird im Hinblick auf eine genaue Kontrolle empfohlen, sich mit dem Technischen Kundendienst der Bonfiglioli Riduttori in Verbindung zu setzen.

0.09 kW

n_2 min^{-1}	M_2 Nm	S	i	R_{n2} N	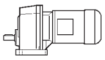		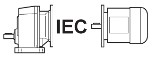 IEC	
69	12.1	2.9	13.1	2400			**S301_13.1 P63 BN63A6**	507
73	11.5	1.7	12.4	1500	**S201_12.4 S05 M05A6**	504	**S201_12.4 P63 BN63A6**	505
74	11.4	1.1	12.3	1160	**S101_12.3 S05 M05A6**	502	**S101_12.3 P63 BN63A6**	503
85	10.0	2.0	10.8	1500	**S201_10.8 S05 M05A6**	504	**S201_10.8 P63 BN63A6**	505
88	9.5	1.3	10.3	1100	**S101_10.3 S05 M05A6**	502	**S101_10.3 P63 BN63A6**	503
103	8.2	1.5	8.9	1060	**S101_8.9 S05 M05A6**	502	**S101_8.9 P63 BN63A6**	503
107	7.9	2.5	8.5	1500	**S201_8.5 S05 M05A6**	504	**S201_8.5 P63 BN63A6**	505
132	6.4	2.7	6.9	990	**S101_6.9 S05 M05A6**	502	**S101_6.9 P63 BN63A6**	503
149	5.7	3.0	6.1	960	**S101_6.1 S05 M05A6**	502	**S101_6.1 P63 BN63A6**	503
193	4.4	3.2	4.7	890	**S101_4.7 S05 M05A6**	502	**S101_4.7 P63 BN63A6**	503
237	3.6	3.9	3.8	830	**S101_3.8 S05 M05A6**	502	**S101_3.8 P63 BN63A6**	503
284	3.0	4.7	3.2	790	**S101_3.2 S05 M05A6**	502	**S101_3.2 P63 BN63A6**	503
364	2.3	5.2	2.5	730	**S101_2.5 S05 M05A6**	502	**S101_2.5 P63 BN63A6**	503
485	1.7	6.9	1.9	670	**S101_1.9 S05 M05A6**	502	**S101_1.9 P63 BN63A6**	503
640	1.3	9.1	1.4	610	**S101_1.4 S05 M05A6**	502	**S101_1.4 P63 BN63A6**	503

0.12 kW

n_2 min^{-1}	M_2 Nm	S	i	R_{n2} N	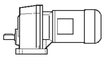		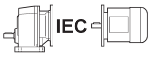 IEC	
69	16.2	2.2	13.1	2400			**S301_13.1 P63 BN63A4**	507
73	15.3	1.3	12.4	1500	**S201_12.4 S05 M05B6**	504	**S201_12.4 P63 BN63B6**	505
85	13.3	1.5	10.8	1500	**S201_10.8 S05 M05B6**	504	**S201_10.8 P63 BN63B6**	505
88	12.7	2.8	10.3	2400			**S301_10.3 P63 BN63B6**	507
88	12.7	0.9	10.3	1060	**S101_10.3 S05 M05B6**	502	**S101_10.3 P63 BN63B6**	503
102	11.0	3.2	8.9	2400			**S301_8.9 P63 BN63B6**	507
103	11.0	1.1	8.9	1030	**S101_8.9 S05 M05B6**	502	**S101_8.9 P63 BN63B6**	503
107	10.5	2.8	13.1	2400			**S301_13.1 P63 BN63B6**	507
107	10.5	1.9	8.5	1500	**S201_8.5 S05 M05B6**	504	**S201_8.5 P63 BN63B6**	505
113	10.0	1.7	12.4	1500	**S201_12.4 S05 M05A4**	504	**S201_12.4 P63 BN63A4**	505
114	9.9	1.0	12.3	1000	**S101_12.3 S05 M05A4**	502	**S101_12.3 P63 BN63A4**	503
126	8.9	3.4	7.2	1500	**S201_7.2 S05 M05B6**	504	**S201_7.2 P63 BN63B6**	505
130	8.6	2.0	10.8	1500	**S201_10.8 S05 M05A4**	504	**S201_10.8 P63 BN63A4**	505
132	8.5	2.0	6.9	960	**S101_6.9 S05 M05B6**	502	**S101_6.9 P63 BN63B6**	503
136	8.3	1.2	10.3	960	**S101_10.3 S05 M05A4**	502	**S101_10.3 P63 BN63A4**	503
149	7.5	2.3	6.1	940	**S101_6.1 S05 M05B6**	502	**S101_6.1 P63 BN63B6**	503
158	7.1	1.4	8.9	920	**S101_8.9 S05 M05A4**	502	**S101_8.9 P63 BN63A4**	503
165	6.8	2.5	8.5	1500	**S201_8.5 S05 M05A4**	504	**S201_8.5 P63 BN63A4**	505
193	5.8	2.4	4.7	870	**S101_4.7 S05 M05B6**	502	**S101_4.7 P63 BN63B6**	503
203	5.5	2.7	6.9	860	**S101_6.9 S05 M05A4**	502	**S101_6.9 P63 BN63A4**	503
229	4.9	3.1	6.1	830	**S101_6.1 S05 M05A4**	502	**S101_6.1 P63 BN63A4**	503
237	4.7	2.9	3.8	820	**S101_3.8 S05 M05B6**	502	**S101_3.8 P63 BN63B6**	503
284	3.9	3.5	3.2	780	**S101_3.2 S05 M05B6**	502	**S101_3.2 P63 BN63B6**	503
296	3.8	3.2	4.7	770	**S101_4.7 S05 M05A4**	502	**S101_4.7 P63 BN63A4**	503
364	3.1	3.9	3.8	720	**S101_3.8 S05 M05A4**	502	**S101_3.8 P63 BN63A4**	503
364	3.1	3.9	2.5	720	**S101_2.5 S05 M05B6**	502	**S101_2.5 P63 BN63B6**	503
438	2.6	4.7	3.2	680	**S101_3.2 S05 M05A4**	502	**S101_3.2 P63 BN63A4**	503

0.12 kW

n_2 min-1	M_2 Nm	S	i	R_{n2} N			IEC	
485	2.3	5.2	1.9	660	**S101_1.9 S05 M05B6**	502	**S101_1.9 P63 BN63B6**	503
560	2.0	5.0	2.5	630	**S101_2.5 S05 M05A4**	502	**S101_2.5 P63 BN63A4**	503
640	1.8	6.8	1.4	600	**S101_1.4 S05 M05B6**	502	**S101_1.4 P63 BN63B6**	503
747	1.5	6.6	1.9	580	**S101_1.9 S05 M05A4**	502	**S101_1.9 P63 BN63A4**	503
985	1.1	8.8	1.4	530	**S101_1.4 S05 M05A4**	502	**S101_1.4 P63 BN63A4**	503

0.18 kW

n_2 min-1	M_2 Nm	S	i	R_{n2} N			IEC	
69	24.6	1.4	13.1	2400			**S301_13.1 P71 BN71A6**	507
73	23.2	2.5	12.4	3800	**S401_12.4 S1 M1SC6**	508	**S401_12.4 P71 BN71A6**	500
84	20.1	1.0	10.8	1500			**S201_10.8 P71 BN71A6**	505
84	20.0	2.9	10.7	3800	**S401_10.7 S1 M1SC6**	508	**S401_10.7 P71 BN71A6**	500
87	19.3	1.8	10.3	2400	**S301_10.3 S1 M1SC6**	506	**S301_10.3 P71 BN71A6**	507
101	16.6	2.1	8.9	2400	**S301_8.9 S1 M1SC6**	506	**S301_8.9 P71 BN71A6**	507
106	15.9	1.3	8.5	1500	**S201_8.5 S1 M1SC6**	504	**S201_8.5 P71 BN71A6**	505
106	15.9	1.9	13.1	2400			**S301_13.1 P63 BN63B4**	507
112	15.1	1.1	12.4	1500	**S201_12.4 S05 M05B4**	504	**S201_12.4 P63 BN63B4**	505
112	15.0	3.3	12.4	3800			**S401_12.4 P63 BN63B4**	509
125	13.5	2.2	7.2	1500	**S201_7.2 S1 M1SC6**	504	**S201_7.2 P71 BN71A6**	505
129	13.0	1.3	10.8	1500	**S201_10.8 S05 M05B4**	504	**S201_10.8 P63 BN63B4**	505
130	12.9	1.3	6.9	910	**S101_6.9 S1 M1SC6**	502	**S101_6.9 P71 BN71A6**	503
135	12.5	2.4	10.3	2330			**S301_10.3 P63 BN63B4**	507
147	11.4	1.5	6.1	890	**S101_6.1 S1 M1SC6**	502	**S101_6.1 P71 BN71A6**	503
155	10.9	2.8	5.8	1500	**S201_5.8 S1 M1SC6**	504	**S201_5.8 P71 BN71A6**	505
156	10.8	2.8	8.9	2230			**S301_8.9 P63 BN63B4**	507
157	10.8	0.9	8.9	880	**S101_8.9 S05 M05B4**	502	**S101_8.9 P63 BN63B4**	503
164	10.3	1.7	8.5	1500	**S201_8.5 S05 M05B4**	504	**S201_8.5 P63 BN63B4**	505
189	8.9	3.4	4.8	1500	**S201_4.8 S1 M1SC6**	504	**S201_4.8 P71 BN71A6**	505
190	8.8	1.6	4.7	830	**S101_4.7 S1 M1SC6**	502	**S101_4.7 P71 BN71A6**	503
192	8.8	3.0	7.2	1500	**S201_7.2 S05 M05B4**	504	**S201_7.2 P63 BN63B4**	505
201	8.4	1.8	6.9	820	**S101_6.9 S05 M05B4**	502	**S101_6.9 P63 BN63B4**	503
214	7.9	3.1	13.1	2020			**S301_13.1 P63 BN63A2**	507
226	7.5	1.7	12.4	1480	**S201_12.4 S05 M05A2**	504	**S201_12.4 P63 BN63A2**	505
227	7.4	2.0	6.1	800	**S101_6.1 S05 M05B4**	502	**S101_6.1 P63 BN63B4**	503
228	7.4	1.1	12.3	800	**S101_12.3 S05 M05A2**	502	**S101_12.3 P63 BN63A2**	503
234	7.2	1.9	3.8	790	**S101_3.8 S1 M1SC6**	502	**S101_3.8 P71 BN71A6**	503
261	6.4	2.0	10.8	1420	**S201_10.8 S05 M05A2**	504	**S201_10.8 P63 BN63A2**	505
273	6.2	1.3	10.3	760	**S101_10.3 S05 M05A2**	502	**S101_10.3 P63 BN63A2**	503
281	6.0	2.3	3.2	750	**S101_3.2 S1 M1SC6**	502	**S101_3.2 P71 BN71A6**	503
294	5.7	2.1	4.7	750	**S101_4.7 S05 M05B4**	502	**S101_4.7 P63 BN63B4**	503
317	5.3	1.5	8.9	730	**S101_8.9 S05 M05A2**	502	**S101_8.9 P63 BN63A2**	503
331	5.1	2.6	8.5	1320	**S201_8.5 S05 M05A2**	504	**S201_8.5 P63 BN63A2**	505
360	4.7	2.6	2.5	700	**S101_2.5 S1 M1SC6**	502	**S101_2.5 P71 BN71A6**	503
361	4.7	2.6	3.8	700	**S101_3.8 S05 M05B4**	502	**S101_3.8 P63 BN63B4**	503
407	4.1	2.9	6.9	680	**S101_6.9 S05 M05A2**	502	**S101_6.9 P63 BN63A2**	503
434	3.9	3.1	3.2	670	**S101_3.2 S05 M05B4**	502	**S101_3.2 P63 BN63B4**	503
460	3.7	3.3	6.1	660	**S101_6.1 S05 M05A2**	502	**S101_6.1 P63 BN63A2**	503

0.18 kW

n2 min-1	M2 Nm	S	i	Rn2 N	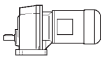		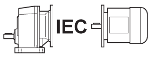	
480	3.5	3.4	1.9	640	**S101_1.9 S1 M1SC6**	502	**S101_1.9 P71 BN71A6**	503
556	3.0	3.3	2.5	620	**S101_2.5 S05 M05B4**	502	**S101_2.5 P63 BN63B4**	503
594	2.8	3.5	4.7	610	**S101_4.7 S05 M05A2**	502	**S101_4.7 P63 BN63A2**	503
633	2.7	4.5	1.4	590	**S101_1.4 S1 M1SC6**	502	**S101_1.4 P71 BN71A6**	503
731	2.3	4.3	3.8	570	**S101_3.8 S05 M05A2**	502	**S101_3.8 P63 BN63A2**	503
741	2.3	4.4	1.9	570	**S101_1.9 S05 M05B4**	502	**S101_1.9 P63 BN63B4**	503
878	1.9	5.2	3.2	540	**S101_3.2 S05 M05A2**	502	**S101_3.2 P63 BN63A2**	503
978	1.7	5.8	1.4	520	**S101_1.4 S05 M05B4**	502	**S101_1.4 P63 BN63B4**	503
1124	1.5	5.3	2.5	500	**S101_2.5 S05 M05A2**	502	**S101_2.5 P63 BN63A2**	503
1499	1.1	7.1	1.9	460	**S101_1.9 S05 M05A2**	502	**S101_1.9 P63 BN63A2**	503
1977	0.9	9.4	1.4	420	**S101_1.4 S05 M05A2**	502	**S101_1.4 P63 BN63A2**	503

0.25 kW

n2 min-1	M2 Nm	S	i	Rn2 N	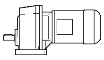		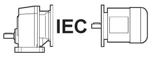	
69	34.1	1.0	13.1	2400			**S301_13.1 P71 BN71B6**	507
70	33.5	3.0	12.9	6520	**S501_12.9 S1 M1SD6**	510	**S501_12.9 P71 BN71B6**	511
73	32.2	1.8	12.4	3800	**S401_12.4 S1 M1SD6**	508	**S401_12.4 P71 BN71B6**	509
84	27.7	2.1	10.7	3800	**S401_10.7 S1 M1SD6**	508	**S401_10.7 P71 BN71B6**	509
87	26.8	1.3	10.3	2400	**S301_10.3 S1 M1SD6**	506	**S301_10.3 P71 BN71B6**	507
101	23.1	1.5	8.9	2400	**S301_8.9 S1 M1SD6**	506	**S301_8.9 P71 BN71B6**	507
104	22.5	3.1	8.6	3800	**S401_8.6 S1 M1SD6**	508	**S401_8.6 P71 BN71B6**	509
105	22.3	1.3	13.1	2400			**S301_13.1 P71 BN71A4**	507
106	22.1	0.9	8.5	1500	**S201_8.5 S1 M1SD6**	504	**S201_8.5 P71 BN71B6**	505
111	21.1	2.4	12.4	3800			**S401_12.4 P71 BN71A4**	509
125	18.8	1.6	7.2	1500	**S201_7.2 S1 M1SD6**	504	**S201_7.2 P71 BN71B6**	505
127	18.4	3.1	7.1	2340	**S301_7.1 S1 M1SD6**	506	**S301_7.1 P71 BN71B6**	507
128	18.3	0.9	10.8	1500	**S201_10.8 S05 M05C4**	504	**S201_10.8 P71 BN71A4**	505
129	18.2	2.8	10.7	3800			**S401_10.7 P71 BN71A4**	509
130	17.9	0.9	6.9	850	**S101_6.9 S1 M1SD6**	502	**S101_6.9 P71 BN71B6**	503
133	17.5	1.7	10.3	2300			**S301_10.3 P71 BN71A4**	507
147	15.9	1.1	6.1	840	**S101_6.1 S1 M1SD6**	502	**S101_6.1 P71 BN71B6**	503
155	15.1	2.0	5.8	1500	**S201_5.8 S1 M1SD6**	504	**S201_5.8 P71 BN71B6**	505
155	15.1	2.0	8.9	2200			**S301_8.9 P71 BN71A4**	507
162	14.5	1.2	8.5	1500	**S201_8.5 S05 M05C4**	504	**S201_8.5 P71 BN71A4**	505
189	12.4	2.4	4.8	1500	**S201_4.8 S1 M1SD6**	504	**S201_4.8 P71 BN71B6**	505
190	12.3	1.1	4.7	790	**S101_4.7 S1 M1SD6**	502	**S101_4.7 P71 BN71B6**	503
190	12.3	2.1	7.2	1500	**S201_7.2 S05 M05C4**	504	**S201_7.2 P71 BN71A4**	505
199	11.7	1.3	6.9	780	**S101_6.9 S05 M05C4**	502	**S101_6.9 P71 BN71A4**	503
214	10.9	2.2	13.1	2000			**S301_13.1 P63 BN63B2**	507
225	10.4	1.4	6.1	770	**S101_6.1 S05 M05C4**	502	**S101_6.1 P71 BN71A4**	503
226	10.3	1.3	12.4	1450	**S201_12.4 S05 M05B2**	504	**S201_12.4 P63 BN63B2**	505
229	10.2	2.9	3.9	1440	**S201_3.9 S1 M1SD6**	504	**S201_3.9 P71 BN71B6**	505
234	10.0	1.4	3.8	750	**S101_3.8 S1 M1SD6**	502	**S101_3.8 P71 BN71B6**	503
236	9.9	2.6	5.8	1430	**S201_5.8 S05 M05C4**	504	**S201_5.8 P71 BN71A4**	505
261	9.0	1.5	10.8	1390	**S201_10.8 S05 M05B2**	504	**S201_10.8 P63 BN63B2**	505
273	8.6	2.8	10.3	1860			**S301_10.3 P63 BN63B2**	507
273	8.6	0.9	10.3	730	**S101_10.3 S05 M05B2**	502	**S101_10.3 P63 BN63B2**	503

0.25 kW

n_2 min-1	M_2 Nm	S	i	R_{n2} N			IEC	
281	8.3	1.7	3.2	720	**S101_3.2 S1 M1SD6**	502	**S101_3.2 P71 BN71B6**	503
288	8.1	3.2	4.8	1350	**S201_4.8 S05 M05C4**	504	**S201_4.8 P71 BN71A4**	505
291	8.0	1.5	4.7	720	**S101_4.7 S05 M05C4**	502	**S101_4.7 P71 BN71A4**	503
316	7.4	3.2	8.9	1770			**S301_8.9 P63 BN63B2**	507
317	7.4	1.1	8.9	710	**S101_8.9 S05 M05B2**	502	**S101_8.9 P63 BN63B2**	503
331	7.1	1.8	8.5	1300	**S201_8.5 S05 M05B2**	504	**S201_8.5 P63 BN63B2**	505
358	6.5	1.8	3.8	680	**S101_3.8 S05 M05C4**	502	**S101_3.8 P71 BN71A4**	503
360	6.5	1.8	2.5	680	**S101_2.5 S1 M1SD6**	502	**S101_2.5 P71 BN71B6**	503
389	6.0	3.5	7.2	1240	**S201_7.2 S05 M05B2**	504	**S201_7.2 P63 BN63B2**	505
407	5.7	2.1	6.9	660	**S101_6.9 S05 M05B2**	502	**S101_6.9 P63 BN63B2**	503
430	5.4	2.2	3.2	650	**S101_3.2 S05 M05C4**	502	**S101_3.2 P71 BN71A4**	503
460	5.1	2.4	6.1	640	**S101_6.1 S05 M05B2**	502	**S101_6.1 P63 BN63B2**	503
480	4.9	2.5	1.9	620	**S101_1.9 S1 M1SD6**	502	**S101_1.9 P71 BN71B6**	503
550	4.3	2.4	2.5	610	**S101_2.5 S05 M05C4**	502	**S101_2.5 P71 BN71A4**	503
594	3.9	2.5	4.7	600	**S101_4.7 S05 M05B2**	502	**S101_4.7 P63 BN63B2**	503
633	3.7	3.2	1.4	580	**S101_1.4 S1 M1SD6**	502	**S101_1.4 P71 BN71B6**	503
731	3.2	3.1	3.8	560	**S101_3.8 S05 M05B2**	502	**S101_3.8 P63 BN63B2**	503
733	3.2	3.1	1.9	560	**S101_1.9 S05 M05C4**	502	**S101_1.9 P71 BN71A4**	503
878	2.7	3.8	3.2	530	**S101_3.2 S05 M05B2**	502	**S101_3.2 P63 BN63B2**	503
968	2.4	4.1	1.4	510	**S101_1.4 S05 M05C4**	502	**S101_1.4 P71 BN71A4**	503
1124	2.1	3.8	2.5	500	**S101_2.5 S05 M05B2**	502	**S101_2.5 P63 BN63B2**	503
1499	1.6	5.1	1.9	450	**S101_1.9 S05 M05B2**	502	**S101_1.9 P63 BN63B2**	503
1977	1.2	6.8	1.4	420	**S101_1.4 S05 M05B2**	502	**S101_1.4 P63 BN63B2**	503

0.37 kW

n_2 min-1	M_2 Nm	S	i	R_{n2} N			IEC	
71	49.0	2.0	12.9	6420	**S501_12.9 S1 M1LA6**	510	**S501_12.9 P80 BN80A6**	511
73	47.2	1.2	12.4	3800	**S401_12.4 S1 M1LA6**	508	**S401_12.4 P80 BN80A6**	509
85	40.6	1.4	10.7	3800	**S401_10.7 S1 M1LA6**	508	**S401_10.7 P80 BN80A6**	509
87	39.8	2.9	10.5	6020	**S501_10.5 S1 M1LA6**	510	**S501_10.5 P80 BN80A6**	511
102	33.8	1.0	8.9	2400	**S301_8.9 S1 M1LA6**	506	**S301_8.9 P80 BN80A6**	507
104	33.2	0.9	13.1	2390			**S301_13.1 P71 BN71B4**	507
105	32.9	2.1	8.6	3800	**S401_8.6 S1 M1LA6**	508	**S401_8.6 P80 BN80A6**	509
106	32.6	3.1	12.9	5650	**S501_12.9 S1 M1SD4**	510	**S501_12.9 P71 BN71B4**	511
110	31.3	1.6	12.4	3800	**S401_12.4 S1 M1SD4**	508	**S401_12.4 P71 BN71B4**	509
126	27.5	1.1	7.2	1500	**S201_7.2 S1 M1LA6**	504	**S201_7.2 P80 BN80A6**	505
127	27.2	3.3	7.2	3800	**S401_7.2 S1 M1LA6**	508	**S401_7.2 P80 BN80A6**	509
128	27.0	2.1	7.1	2260	**S301_7.1 S1 M1LA6**	506	**S301_7.1 P80 BN80A6**	507
128	27.0	1.9	10.7	3800	**S401_10.7 S1 M1SD4**	508	**S401_10.7 P71 BN71B4**	509
133	26.0	1.2	10.3	2240	**S301_10.3 S1 M1SD4**	506	**S301_10.3 P71 BN71B4**	507
154	22.5	1.3	8.9	2150	**S301_8.9 S1 M1SD4**	506	**S301_8.9 P71 BN71B4**	507
156	22.2	2.6	5.8	2140	**S301_5.8 S1 M1LA6**	506	**S301_5.8 P80 BN80A6**	507
156	22.1	1.4	5.8	1500	**S201_5.8 S1 M1LA6**	504	**S201_5.8 P80 BN80A6**	505
159	21.8	2.7	8.6	3610	**S401_8.6 S1 M1SD4**	508	**S401_8.6 P71 BN71B4**	509
184	18.8	3.1	4.9	2040	**S301_4.9 S1 M1LA6**	506	**S301_4.9 P80 BN80A6**	507
190	18.3	1.4	7.2	1460	**S201_7.2 S1 M1SD4**	504	**S201_7.2 P71 BN71B4**	505
191	18.1	1.7	4.8	1460	**S201_4.8 S1 M1LA6**	504	**S201_4.8 P80 BN80A6**	505

0.37 kW

n_2 min^{-1}	M_2 Nm	S	i	R_{n2} N			IEC	
193	17.9	2.8	7.1	2020	**S301_7.1 S1 M1SD4**	506	**S301_7.1 P71 BN71B4**	507
214	16.2	1.5	13.1	1960			**S301_13.1 P71 BN71A2**	507
224	15.4	1.0	6.1	710	**S101_6.1 S1 M1SD4**	502	**S101_6.1 P71 BN71B4**	503
227	15.3	2.6	12.4	3230			**S401_12.4 P71 BN71A2**	509
231	15.0	2.0	3.9	1380	**S201_3.9 S1 M1LA6**	504	**S201_3.9 P80 BN80A6**	505
234	14.8	3.4	5.8	1900	**S301_5.8 S1 M1SD4**	506	**S301_5.8 P71 BN71B4**	507
235	14.7	1.8	5.8	1390	**S201_5.8 S1 M1SD4**	504	**S201_5.8 P71 BN71B4**	505
237	14.6	1.0	3.8	690	**S101_3.8 S1 M1LA6**	502	**S101_3.8 P80 BN80A6**	503
261	13.2	1.0	10.8	1350	**S201_10.8 S05 M05C2**	504	**S201_10.8 P71 BN71A2**	505
263	13.1	3.0	10.7	3080			**S401_10.7 P71 BN71A2**	509
273	12.7	1.9	10.3	1820			**S301_10.3 P71 BN71A2**	507
284	12.2	1.1	3.2	670	**S101_3.2 S1 M1LA6**	502	**S101_3.2 P80 BN80A6**	503
287	12.1	2.2	4.8	1310	**S201_4.8 S1 M1SD4**	504	**S201_4.8 P71 BN71B4**	505
290	11.9	1.0	4.7	670	**S101_4.7 S1 M1SD4**	502	**S101_4.7 P71 BN71B4**	503
293	11.8	2.5	3.1	1300	**S201_3.1 S1 M1LA6**	504	**S201_3.1 P80 BN80A6**	505
316	11.0	2.2	8.9	1740			**S301_8.9 P71 BN71A2**	507
331	10.5	1.2	8.5	1270	**S201_8.5 S05 M05C2**	504	**S201_8.5 P71 BN71A2**	505
348	9.9	2.6	3.9	1240	**S201_3.9 S1 M1SD4**	504	**S201_3.9 P71 BN71B4**	505
356	9.7	1.2	3.8	640	**S101_3.8 S1 M1SD4**	502	**S101_3.8 P71 BN71B4**	503
364	9.5	1.3	2.5	630	**S101_2.5 S1 M1LA6**	502	**S101_2.5 P80 BN80A6**	503
373	9.3	3.2	2.4	1210	**S201_2.4 S1 M1LA6**	504	**S201_2.4 P80 BN80A6**	505
389	8.9	2.4	7.2	1210	**S201_7.2 S05 M05C2**	504	**S201_7.2 P71 BN71A2**	505
407	8.5	1.4	6.9	630	**S101_6.9 S05 M05C2**	502	**S101_6.9 P71 BN71A2**	503
428	8.1	1.5	3.2	620	**S101_3.2 S1 M1SD4**	502	**S101_3.2 P71 BN71B4**	503
440	7.9	3.3	3.1	1160	**S201_3.1 S1 M1SD4**	504	**S201_3.1 P71 BN71B4**	505
460	7.5	1.6	6.1	610	**S101_6.1 S05 M05C2**	502	**S101_6.1 P71 BN71A2**	503
480	7.2	2.8	1.9	1130	**S201_1.9 S1 M1LA6**	504	**S201_1.9 P80 BN80A6**	505
483	7.2	2.9	5.8	1130	**S201_5.8 S05 M05C2**	504	**S201_5.8 P71 BN71A2**	505
485	7.1	1.7	1.9	590	**S101_1.9 S1 M1LA6**	502	**S101_1.9 P80 BN80A6**	503
548	6.3	1.6	2.5	580	**S101_2.5 S1 M1SD4**	502	**S101_2.5 P71 BN71B4**	503
594	5.8	1.7	4.7	570	**S101_4.7 S05 M05C2**	502	**S101_4.7 P71 BN71A2**	503
640	5.4	2.2	1.4	550	**S101_1.4 S1 M1LA6**	502	**S101_1.4 P80 BN80A6**	503
731	4.7	2.1	3.8	540	**S101_3.8 S05 M05C2**	502	**S101_3.8 P71 BN71A2**	503
731	4.7	2.1	1.9	540	**S101_1.9 S1 M1SD4**	502	**S101_1.9 P71 BN71B4**	503
878	3.9	2.5	3.2	520	**S101_3.2 S05 M05C2**	502	**S101_3.2 P71 BN71A2**	503
964	3.6	2.8	1.4	500	**S101_1.4 S1 M1SD4**	502	**S101_1.4 P71 BN71B4**	503
1124	3.1	2.6	2.5	480	**S101_2.5 S05 M05C2**	502	**S101_2.5 P71 BN71A2**	503
1499	2.3	3.5	1.9	440	**S101_1.9 S05 M05C2**	502	**S101_1.9 P71 BN71A2**	503
1977	1.8	4.6	1.4	410	**S101_1.4 S05 M05C2**	502	**S101_1.4 P71 BN71A2**	503

0.55 kW

n_2 min^{-1}	M_2 Nm	S	i	R_{n2} N			IEC	
71	72.1	1.4	12.9	6290	**S501_12.9 S2 M2SA6**	510	**S501_12.9 P80 BN80B6**	511
86	59.7	1.0	10.7	3800	**S401_10.7 S2 M2SA6**	508	**S401_10.7 P80 BN80B6**	509
88	58.5	2.0	10.5	5910	**S501_10.5 S2 M2SA6**	510	**S501_10.5 P80 BN80B6**	511
105	49.1	2.5	8.8	5600	**S501_8.8 S2 M2SA6**	510	**S501_8.8 P80 BN80B6**	511
107	48.3	1.4	8.6	3800	**S401_8.6 S2 M2SA6**	508	**S401_8.6 P80 BN80B6**	509

0.55 kW

n_2 min-1	M_2 Nm	S	i	R_{n2} N			IEC	
107	48.1	2.1	12.9	5560	**S501_12.9 S1 M1LA4**	510	**S501_12.9 P80 BN80A4**	511
111	46.3	1.1	12.4	3800	**S401_12.4 S1 M1LA4**	508	**S401_12.4 P80 BN80A4**	509
124	41.4	3.4	7.4	5310	**S501_7.4 S2 M2SA6**	510	**S501_7.4 P80 BN80B6**	511
129	40.0	2.2	7.2	3780	**S401_7.2 S2 M2SA6**	508	**S401_7.2 P80 BN80B6**	509
129	39.8	1.3	10.7	3770	**S401_10.7 S1 M1LA4**	508	**S401_10.7 P80 BN80A4**	509
130	39.7	1.5	7.1	2150	**S301_7.1 S2 M2SA6**	506	**S301_7.1 P80 BN80B6**	507
132	39.0	2.8	10.5	5220	**S501_10.5 S1 M1LA4**	510	**S501_10.5 P80 BN80A4**	511
152	33.9	3.1	6.1	3600	**S401_6.1 S2 M2SA6**	508	**S401_6.1 P80 BN80B6**	509
155	33.2	0.9	8.9	2060	**S301_8.9 S1 M1LA4**	506	**S301_8.9 P80 BN80A4**	507
157	32.7	1.8	5.8	2050	**S301_5.8 S2 M2SA6**	506	**S301_5.8 P80 BN80B6**	507
157	32.7	3.4	8.8	4940	**S501_8.8 S1 M1LA4**	510	**S501_8.8 P80 BN80A4**	511
158	32.6	0.9	5.8	1420	**S201_5.8 S2 M2SA6**	504	**S201_5.8 P80 BN80B6**	505
160	32.2	1.9	8.6	3540	**S401_8.6 S1 M1LA4**	508	**S401_8.6 P80 BN80A4**	509
186	27.6	2.1	4.9	1960	**S301_4.9 S2 M2SA6**	506	**S301_4.9 P80 BN80B6**	507
191	26.9	1.0	7.2	1370	**S201_7.2 S1 M1LA4**	504	**S201_7.2 P80 BN80A4**	505
193	26.7	1.1	4.8	1370	**S201_4.8 S2 M2SA6**	504	**S201_4.8 P80 BN80B6**	505
193	26.7	3.0	7.2	3350	**S401_7.2 S1 M1LA4**	508	**S401_7.2 P80 BN80A4**	509
195	26.4	1.9	7.1	1940	**S301_7.1 S1 M1LA4**	506	**S301_7.1 P80 BN80A4**	507
214	24.0	1.0	13.1	1900			**S301_13.1 P71 BN71B2**	507
218	23.6	3.4	12.9	4460	**S501_12.9 S1 M1SD2**	510	**S501_12.9 P71 BN71B2**	511
227	22.7	1.8	12.4	3190	**S401_12.4 S1 M1SD2**	508	**S401_12.4 P71 BN71B2**	509
233	22.1	2.6	3.9	1850	**S301_3.9 S2 M2SA6**	506	**S301_3.9 P80 BN80B6**	507
234	22.0	1.4	3.9	1300	**S201_3.9 S2 M2SA6**	504	**S201_3.9 P80 BN80B6**	505
236	21.8	2.3	5.8	1840	**S301_5.8 S1 M1LA4**	506	**S301_5.8 P80 BN80A4**	507
237	21.7	1.2	5.8	1310	**S201_5.8 S1 M1LA4**	504	**S201_5.8 P80 BN80A4**	505
263	19.5	2.0	10.7	3040	**S401_10.7 S1 M1SD2**	508	**S401_10.7 P71 BN71B2**	509
273	18.9	1.3	10.3	1780	**S301_10.3 S1 M1SD2**	506	**S301_10.3 P71 BN71B2**	507
280	18.4	2.7	4.9	1760	**S301_4.9 S1 M1LA4**	506	**S301_4.9 P80 BN80A4**	507
289	17.8	1.5	4.8	1250	**S201_4.8 S1 M1LA4**	504	**S201_4.8 P80 BN80A4**	505
296	17.4	1.7	3.1	1230	**S201_3.1 S2 M2SA6**	504	**S201_3.1 P80 BN80B6**	505
300	17.1	3.4	3.1	1720	**S301_3.1 S2 M2SA6**	506	**S301_3.1 P80 BN80B6**	507
316	16.3	1.5	8.9	1700	**S301_8.9 S1 M1SD2**	506	**S301_8.9 P71 BN71B2**	507
325	15.8	3.0	8.6	2850	**S401_8.6 S1 M1SD2**	508	**S401_8.6 P71 BN71B2**	509
350	14.7	3.4	3.9	1650	**S301_3.9 S1 M1LA4**	506	**S301_3.9 P80 BN80A4**	507
351	14.7	1.8	3.9	1190	**S201_3.9 S1 M1LA4**	504	**S201_3.9 P80 BN80A4**	505
377	13.6	2.2	2.4	1160	**S201_2.4 S2 M2SA6**	504	**S201_2.4 P80 BN80B6**	505
389	13.2	1.6	7.2	1160	**S201_7.2 S1 M1SD2**	504	**S201_7.2 P71 BN71B2**	505
396	13.0	3.1	7.1	1600	**S301_7.1 S1 M1SD2**	506	**S301_7.1 P71 BN71B2**	507
407	12.6	0.9	6.9	570	**S101_6.9 S1 M1SD2**	502	**S101_6.9 P71 BN71B2**	503
431	11.9	1.0	3.2	560	**S101_3.2 S1 M1LA4**	502	**S101_3.2 P80 BN80A4**	503
444	11.6	2.2	3.1	1120	**S201_3.1 S1 M1LA4**	504	**S201_3.1 P80 BN80A4**	505
460	11.2	1.1	6.1	570	**S101_6.1 S1 M1SD2**	502	**S101_6.1 P71 BN71B2**	503
483	10.7	2.0	5.8	1100	**S201_5.8 S1 M1SD2**	504	**S201_5.8 P71 BN71B2**	505
486	10.6	1.9	1.9	1080	**S201_1.9 S2 M2SA6**	504	**S201_1.9 P80 BN80B6**	505
491	10.5	1.1	1.9	540	**S101_1.9 S2 M2SA6**	502	**S101_1.9 P80 BN80B6**	503
504	10.2	3.4	1.8	1470	**S301_1.8 S2 M2SA6**	506	**S301_1.8 P80 BN80B6**	507
552	9.3	1.1	2.5	540	**S101_2.5 S1 M1LA4**	502	**S101_2.5 P80 BN80A4**	503
566	9.1	2.9	2.4	1050	**S201_2.4 S1 M1LA4**	504	**S201_2.4 P80 BN80A4**	505
589	8.7	2.4	4.8	1040	**S201_4.8 S1 M1SD2**	504	**S201_4.8 P71 BN71B2**	505
594	8.7	1.2	4.7	540	**S101_4.7 S1 M1SD2**	502	**S101_4.7 P71 BN71B2**	503
647	8.0	1.5	1.4	510	**S101_1.4 S2 M2SA6**	502	**S101_1.4 P80 BN80B6**	503

0.55 kW

n_2 min^{-1}	M_2 Nm	S	i	R_{n2} N			IEC	
661	7.8	2.6	1.4	990	**S201_1.4 S2 M2SA6**	504	**S201_1.4 P80 BN80B6**	505
714	7.2	2.9	3.9	980	**S201_3.9 S1 M1SD2**	504	**S201_3.9 P71 BN71B2**	505
728	7.1	2.4	1.9	970	**S201_1.9 S1 M1LA4**	504	**S201_1.9 P80 BN80A4**	505
731	7.0	1.4	3.8	510	**S101_3.8 S1 M1SD2**	502	**S101_3.8 P71 BN71B2**	503
736	7.0	1.4	1.9	500	**S101_1.9 S1 M1LA4**	502	**S101_1.9 P80 BN80A4**	503
878	5.9	1.7	3.2	490	**S101_3.2 S1 M1SD2**	502	**S101_3.2 P71 BN71B2**	503
971	5.3	1.9	1.4	470	**S101_1.4 S1 M1LA4**	502	**S101_1.4 P80 BN80A4**	503
992	5.2	3.3	1.4	890			**S201_1.4 P80 BN80A4**	505
1124	4.6	1.7	2.5	460	**S101_2.5 S1 M1SD2**	502	**S101_2.5 P71 BN71B2**	503
1499	3.4	2.3	1.9	430	**S101_1.9 S1 M1SD2**	502	**S101_1.9 P71 BN71B2**	503
1977	2.6	3.1	1.4	390	**S101_1.4 S1 M1SD2**	502	**S101_1.4 P71 BN71B2**	503

0.75 kW

n_2 min^{-1}	M_2 Nm	S	i	R_{n2} N			IEC	
71	98.3	1.0	12.9	6170	**S501_12.9 S2 M2SB6**	510	**S501_12.9 P90 BN90S6**	511
88	79.8	1.4	10.5	5810	**S501_10.5 S2 M2SB6**	510	**S501_10.5 P90 BN90S6**	511
105	66.9	1.9	8.8	5520	**S501_8.8 S2 M2SB6**	510	**S501_8.8 P90 BN90S6**	511
107	65.9	1.1	8.6	3800	**S401_8.6 S2 M2SB6**	508	**S401_8.6 P90 BN90S6**	509
109	64.6	1.5	12.9	5460	**S501_12.9 S2 M2SA4**	510	**S501_12.9 P80 BN80B4**	511
124	56.5	2.5	7.4	5240	**S501_7.4 S2 M2SB6**	510	**S501_7.4 P90 BN90S6**	511
129	54.6	1.6	7.2	3700	**S401_7.2 S2 M2SB6**	508	**S401_7.2 P90 BN90S6**	509
130	54.1	1.1	7.1	2040	**S301_7.1 S2 M2SB6**	506	**S301_7.1 P90 BN90S6**	507
131	53.5	0.9	10.7	3670	**S401_10.7 S2 M2SA4**	508	**S401_10.7 P80 BN80B4**	509
134	52.4	2.1	10.5	5130	**S501_10.5 S2 M2SA4**	510	**S501_10.5 P80 BN80B4**	511
152	46.3	2.3	6.1	3530	**S401_6.1 S2 M2SB6**	508	**S401_6.1 P90 BN90S6**	509
152	46.2	3.2	6.1	4940	**S501_6.1 S2 M2SB6**	510	**S501_6.1 P90 BN90S6**	511
157	44.6	1.3	5.8	1960	**S301_5.8 S2 M2SB6**	506	**S301_5.8 P90 BN90S6**	507
160	44.0	2.5	8.8	4870	**S501_8.8 S2 M2SA4**	510	**S501_8.8 P80 BN80B4**	511
162	43.3	1.4	8.6	3460	**S401_8.6 S2 M2SA4**	508	**S401_8.6 P80 BN80B4**	509
186	37.6	1.5	4.9	1880	**S301_4.9 S2 M2SB6**	506	**S301_4.9 P90 BN90S6**	507
190	36.9	2.8	4.8	3300	**S401_4.8 S2 M2SB6**	508	**S401_4.8 P90 BN90S6**	509
196	35.9	2.2	7.2	3280	**S401_7.2 S2 M2SA4**	508	**S401_7.2 P80 BN80B4**	509
197	35.6	1.4	7.1	1860	**S301_7.1 S2 M2SA4**	506	**S301_7.1 P80 BN80B4**	507
217	32.3	2.5	12.9	4420	**S501_12.9 S1 M1LA2**	510	**S501_12.9 P80 BN80A2**	511
226	31.1	1.3	12.4	3150	**S401_12.4 S1 M1LA2**	508	**S401_12.4 P80 BN80A2**	509
231	30.4	3.0	6.1	3120	**S401_6.1 S2 M2SA4**	508	**S401_6.1 P80 BN80B4**	509
233	30.1	1.9	3.9	1780	**S301_3.9 S2 M2SB6**	506	**S301_3.9 P90 BN90S6**	507
234	30.0	1.0	3.9	1220	**S201_3.9 S2 M2SB6**	504	**S201_3.9 P90 BN90S6**	505
239	29.3	1.7	5.8	1780	**S301_5.8 S2 M2SA4**	506	**S301_5.8 P80 BN80B4**	507
263	26.7	1.5	10.7	3000	**S401_10.7 S1 M1LA2**	508	**S401_10.7 P80 BN80A2**	509
268	26.2	3.2	10.5	4140	**S501_10.5 S1 M1LA2**	510	**S501_10.5 P80 BN80A2**	511
272	25.8	0.9	10.3	1730	**S301_10.3 S1 M1LA2**	506	**S301_10.3 P80 BN80A2**	507
284	24.7	2.0	4.9	1700	**S301_4.9 S2 M2SA4**	506	**S301_4.9 P80 BN80B4**	507
294	23.9	1.1	4.8	1180	**S201_4.8 S2 M2SA4**	504	**S201_4.8 P80 BN80B4**	505
296	23.7	1.3	3.1	1160	**S201_3.1 S2 M2SB6**	504	**S201_3.1 P90 BN90S6**	505
300	23.4	2.5	3.1	1670	**S301_3.1 S2 M2SB6**	506	**S301_3.1 P90 BN90S6**	507
315	22.3	1.1	8.9	1660	**S301_8.9 S1 M1LA2**	506	**S301_8.9 P80 BN80A2**	507

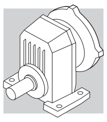

0.75 kW

n_2 min^{-1}	M_2 Nm	S	i	R_{n2} N			IEC	
324	21.7	2.2	8.6	2820	**S401_8.6 S1 M1LA2**	508	**S401_8.6 P80 BN80A2**	509
355	19.8	2.5	3.9	1600	**S301_3.9 S2 M2SA4**	506	**S301_3.9 P80 BN80B4**	507
356	19.7	1.3	3.9	1130	**S201_3.9 S2 M2SA4**	504	**S201_3.9 P80 BN80B4**	505
377	18.6	1.6	2.4	1110	**S201_2.4 S2 M2SB6**	504	**S201_2.4 P90 BN90S6**	505
380	18.5	3.1	2.4	1560	**S301_2.4 S2 M2SB6**	506	**S301_2.4 P90 BN90S6**	507
388	18.1	1.2	7.2	1120	**S201_7.2 S1 M1LA2**	504	**S201_7.2 P80 BN80A2**	505
395	17.8	2.3	7.1	1560	**S301_7.1 S1 M1LA2**	506	**S301_7.1 P80 BN80A2**	507
450	15.6	1.7	3.1	1070	**S201_3.1 S2 M2SA4**	504	**S201_3.1 P80 BN80B4**	505
457	15.4	3.3	3.1	1490	**S301_3.1 S2 M2SA4**	506	**S301_3.1 P80 BN80B4**	507
479	14.7	2.7	5.8	1480	**S301_5.8 S1 M1LA2**	506	**S301_5.8 P80 BN80A2**	507
481	14.6	1.4	5.8	1060	**S201_5.8 S1 M1LA2**	504	**S201_5.8 P80 BN80A2**	505
486	14.5	1.4	1.9	1040	**S201_1.9 S2 M2SB6**	504	**S201_1.9 P90 BN90S6**	505
504	13.9	2.5	1.8	1440	**S301_1.8 S2 M2SB6**	506	**S301_1.8 P90 BN90S6**	507
568	12.4	3.2	4.9	1410	**S301_4.9 S1 M1LA2**	506	**S301_4.9 P80 BN80A2**	507
574	12.2	2.1	2.4	1010	**S201_2.4 S2 M2SA4**	504	**S201_2.4 P80 BN80B4**	505
587	12.0	1.8	4.8	1010	**S201_4.8 S1 M1LA2**	504	**S201_4.8 P80 BN80A2**	505
647	10.8	1.1	1.4	460	**S101_1.4 S2 M2SB6**	502	**S101_1.4 P90 BN90S6**	503
654	10.7	3.3	1.4	1330	**S301_1.4 S2 M2SB6**	506	**S301_1.4 P90 BN90S6**	507
661	10.6	1.9	1.4	960	**S201_1.4 S2 M2SB6**	504	**S201_1.4 P90 BN90S6**	505
712	9.9	2.1	3.9	960	**S201_3.9 S1 M1LA2**	504	**S201_3.9 P80 BN80A2**	505
728	9.6	1.0	3.8	480	**S101_3.8 S1 M1LA2**	502	**S101_3.8 P80 BN80A2**	503
739	9.5	1.8	1.9	940	**S201_1.9 S2 M2SA4**	504	**S201_1.9 P80 BN80B4**	505
747	9.4	1.1	1.9	460	**S101_1.9 S2 M2SA4**	502	**S101_1.9 P80 BN80B4**	503
767	9.2	3.3	1.8	1280	**S301_1.8 S2 M2SA4**	506	**S301_1.8 P80 BN80B4**	507
875	8.0	1.2	3.2	460	**S101_3.2 S1 M1LA2**	502	**S101_3.2 P80 BN80A2**	503
900	7.8	2.7	3.1	900	**S201_3.1 S1 M1LA2**	504	**S201_3.1 P80 BN80A2**	505
985	7.1	1.4	1.4	440	**S101_1.4 S2 M2SA4**	502	**S101_1.4 P80 BN80B4**	503
1006	7.0	2.4	1.4	860	**S201_1.4 S2 M2SA4**	504	**S201_1.4 P80 BN80B4**	505
1120	6.3	1.3	2.5	440	**S101_2.5 S1 M1LA2**	502	**S101_2.5 P80 BN80A2**	503
1149	6.1	3.4	2.4	840	**S201_2.4 S1 M1LA2**	504	**S201_2.4 P80 BN80A2**	505
1478	4.7	2.7	1.9	780	**S201_1.9 S1 M1LA2**	504	**S201_1.9 P80 BN80A2**	505
1493	4.7	1.7	1.9	410	**S101_1.9 S1 M1LA2**	502	**S101_1.9 P80 BN80A2**	503
1970	3.6	2.2	1.4	380	**S101_1.4 S1 M1LA2**	502	**S101_1.4 P80 BN80A2**	503

1.1 kW

n_2 min^{-1}	M_2 Nm	S	i	R_{n2} N			IEC	
88	117.0	1.0	10.5	5650	**S501_10.5 S3 M3SA6**	510	**S501_10.5 P90 BN90L6**	511
105	98.1	1.3	8.8	5380	**S501_8.8 S3 M3SA6**	510	**S501_8.8 P90 BN90L6**	511
109	94.8	1.1	12.9	5320	**S501_12.9 S2 M2SB4**	510	**S501_12.9 P90 BN90S4**	511
124	82.8	1.7	7.4	5120	**S501_7.4 S3 M3SA6**	510	**S501_7.4 P90 BN90L6**	511
129	80.1	1.1	7.2	3550	**S401_7.2 S3 M3SA6**	508	**S401_7.2 P90 BN90L6**	509
134	76.9	1.4	10.5	5020	**S501_10.5 S2 M2SB4**	510	**S501_10.5 P90 BN90S4**	511
152	67.9	1.5	6.1	3400	**S401_6.1 S3 M3SA6**	508	**S401_6.1 P90 BN90L6**	509
152	67.8	2.2	6.1	4840	**S501_6.1 S3 M3SA6**	510	**S501_6.1 P90 BN90L6**	511
160	64.5	1.7	8.8	4770	**S501_8.8 S2 M2SB4**	510	**S501_8.8 P90 BN90S4**	511
162	63.5	0.9	8.6	3350	**S401_8.6 S2 M2SB4**	508	**S401_8.6 P90 BN90S4**	509
186	55.2	1.1	4.9	1740	**S301_4.9 S3 M3SA6**	506	**S301_4.9 P90 BN90L6**	507

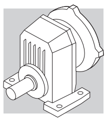

1.1 kW

n_2 min-1	M_2 Nm	S	i	R_{n2} N	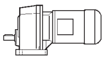		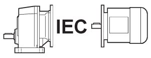	
189	54.4	2.4	7.4	4530	**S501_7.4 S2 M2SB4**	510	**S501_7.4 P90 BN90S4**	511
190	54.1	1.9	4.8	3200	**S401_4.8 S3 M3SA6**	508	**S401_4.8 P90 BN90L6**	509
194	53.2	3.3	4.8	4500	**S501_4.8 S3 M3SA6**	510	**S501_4.8 P90 BN90L6**	511
196	52.6	1.5	7.2	3180	**S401_7.2 S2 M2SB4**	508	**S401_7.2 P90 BN90S4**	509
197	52.1	1.0	7.1	1730	**S301_7.1 S2 M2SB4**	506	**S301_7.1 P90 BN90S4**	507
217	47.4	1.7	12.9	4350	**S501_12.9 S2 M2SA2**	510	**S501_12.9 P80 BN80B2**	511
231	44.6	2.0	6.1	3040	**S401_6.1 S2 M2SB4**	508	**S401_6.1 P90 BN90S4**	509
231	44.5	2.9	6.1	4270	**S501_6.1 S2 M2SB4**	510	**S501_6.1 P90 BN90S4**	511
233	44.1	1.3	3.9	1670	**S301_3.9 S3 M3SA6**	506	**S301_3.9 P90 BN90L6**	507
239	43.0	1.2	5.8	1670	**S301_5.8 S2 M2SB4**	506	**S301_5.8 P90 BN90S4**	507
241	42.7	2.5	3.8	2990	**S401_3.8 S3 M3SA6**	508	**S401_3.8 P90 BN90L6**	509
263	39.2	1.0	10.7	2930	**S401_10.7 S2 M2SA2**	508	**S401_10.7 P80 BN80B2**	509
268	38.4	2.2	10.5	4090	**S501_10.5 S2 M2SA2**	510	**S501_10.5 P80 BN80B2**	511
284	36.3	1.4	4.9	1610	**S301_4.9 S2 M2SB4**	506	**S301_4.9 P90 BN90S4**	507
290	35.5	2.5	4.8	2850	**S401_4.8 S2 M2SB4**	508	**S401_4.8 P90 BN90S4**	509
300	34.3	1.7	3.1	1580	**S301_3.1 S3 M3SA6**	506	**S301_3.1 P90 BN90L6**	507
301	34.2	3.1	3.1	2810	**S401_3.1 S3 M3SA6**	508	**S401_3.1 P90 BN90L6**	509
319	32.2	2.6	8.8	3870	**S501_8.8 S2 M2SA2**	510	**S501_8.8 P80 BN80B2**	511
324	31.8	1.5	8.6	2760	**S401_8.6 S2 M2SA2**	508	**S401_8.6 P80 BN80B2**	509
355	29.0	1.7	3.9	1530	**S301_3.9 S2 M2SB4**	506	**S301_3.9 P90 BN90S4**	507
367	28.0	3.2	3.8	2650	**S401_3.8 S2 M2SB4**	508	**S401_3.8 P90 BN90S4**	509
377	27.3	1.1	2.4	1010	**S201_2.4 S3 M3SA6**	504	**S201_2.4 P90 BN90L6**	505
380	27.1	2.1	2.4	1490	**S301_2.4 S3 M3SA6**	506	**S301_2.4 P90 BN90L6**	507
391	26.3	2.4	7.2	2610	**S401_7.2 S2 M2SA2**	508	**S401_7.2 P80 BN80B2**	509
395	26.1	1.5	7.1	1500	**S301_7.1 S2 M2SA2**	506	**S301_7.1 P80 BN80B2**	507
450	22.9	1.1	3.1	990	**S201_3.1 S2 M2SB4**	504	**S201_3.1 P90 BN90S4**	505
457	22.5	2.2	3.1	1430	**S301_3.1 S2 M2SB4**	506	**S301_3.1 P90 BN90S4**	507
462	22.3	3.1	6.1	2490	**S401_6.1 S2 M2SA2**	508	**S401_6.1 P80 BN80B2**	509
479	21.5	1.9	5.8	1420	**S301_5.8 S2 M2SA2**	506	**S301_5.8 P80 BN80B2**	507
481	21.4	1.0	5.8	990	**S201_5.8 S2 M2SA2**	504	**S201_5.8 P80 BN80B2**	505
486	21.2	0.9	1.9	960	**S201_1.9 S3 M3SA6**	504	**S201_1.9 P90 BN90L6**	505
497	20.7	3.4	1.9	2420	**S401_1.9 S3 M3SA6**	508	**S401_1.9 P90 BN90L6**	509
504	20.4	1.7	1.8	1380	**S301_1.8 S3 M3SA6**	506	**S301_1.8 P90 BN90L6**	507
568	18.1	2.2	4.9	1360	**S301_4.9 S2 M2SA2**	506	**S301_4.9 P80 BN80B2**	507
574	17.9	1.5	2.4	940	**S201_2.4 S2 M2SB4**	504	**S201_2.4 P90 BN90S4**	505
578	17.8	2.8	2.4	1340	**S301_2.4 S2 M2SB4**	506	**S301_2.4 P90 BN90S4**	507
587	17.5	1.2	4.8	950	**S201_4.8 S2 M2SA2**	504	**S201_4.8 P80 BN80B2**	505
654	15.7	2.2	1.4	1290	**S301_1.4 S3 M3SA6**	506	**S301_1.4 P90 BN90L6**	507
661	15.6	1.3	1.4	900	**S201_1.4 S3 M3SA6**	504	**S201_1.4 P90 BN90L6**	505
710	14.5	2.8	3.9	1280	**S301_3.9 S2 M2SA2**	506	**S301_3.9 P80 BN80B2**	507
712	14.5	1.5	3.9	910	**S201_3.9 S2 M2SA2**	504	**S201_3.9 P80 BN80B2**	505
739	13.9	1.2	1.9	890	**S201_1.9 S2 M2SB4**	504	**S201_1.9 P90 BN90S4**	505
767	13.4	2.2	1.8	1240	**S301_1.8 S2 M2SB4**	506	**S301_1.8 P90 BN90S4**	507
900	11.4	1.8	3.1	860	**S201_3.1 S2 M2SA2**	504	**S201_3.1 P80 BN80B2**	505
985	10.4	1.0	1.4	390	**S101_1.4 S2 M2SB4**	502	**S101_1.4 P90 BN90S4**	503
995	10.3	2.9	1.4	1150	**S301_1.4 S2 M2SB4**	506	**S301_1.4 P90 BN90S4**	507
1006	10.2	1.7	1.4	820	**S201_1.4 S2 M2SB4**	504	**S201_1.4 P90 BN90S4**	505
1149	9.0	2.3	2.4	810	**S201_2.4 S2 M2SA2**	504	**S201_2.4 P80 BN80B2**	505
1478	7.0	1.9	1.9	750	**S201_1.9 S2 M2SA2**	504	**S201_1.9 P80 BN80B2**	505
1493	6.9	1.2	1.9	380	**S101_1.9 S2 M2SA2**	502	**S101_1.9 P80 BN80B2**	503
1970	5.2	1.5	1.4	350	**S101_1.4 S2 M2SA2**	502	**S101_1.4 P80 BN80B2**	503

1.1 kW

n_2 min^{-1}	M_2 Nm	S	i	R_{n2} N			IEC	
2013	5.1	2.5	1.4	690	**S201_1.4 S2 M2SA2**	504	**S201_1.4 P80 BN80B2**	505

1.5 kW

n_2 min^{-1}	M_2 Nm	S	i	R_{n2} N			IEC	
88	117.0	1.0	10.5	5650	**S501_10.5 S3 M3SA6**	510	**S501_10.5 P90 BN90L6**	511
105	98.1	1.3	8.8	5380	**S501_8.8 S3 M3SA6**	510	**S501_8.8 P90 BN90L6**	511
109	94.8	1.1	12.9	5320	**S501_12.9 S3 M3SA4**	510	**S501_12.9 P90 BN90S4**	511
124	82.8	1.7	7.4	5120	**S501_7.4 S3 M3SA6**	510	**S501_7.4 P90 BN90L6**	511
129	80.1	1.1	7.2	3550	**S401_7.2 S3 M3SA6**	508	**S401_7.2 P90 BN90L6**	509
134	76.9	1.4	10.5	5020	**S501_10.5 S3 M3SA4**	510	**S501_10.5 P90 BN90S4**	511
152	67.9	1.5	6.1	3400	**S401_6.1 S3 M3SA6**	508	**S401_6.1 P90 BN90L6**	509
152	67.8	2.2	6.1	4840	**S501_6.1 S3 M3SA6**	510	**S501_6.1 P90 BN90L6**	511
160	64.5	1.7	8.8	4770	**S501_8.8 S3 M3SA4**	510	**S501_8.8 P90 BN90S4**	511
162	63.5	0.9	8.6	3350	**S401_8.6 S3 M3SA4**	508	**S401_8.6 P90 BN90S4**	509
186	55.2	1.1	4.9	1740	**S301_4.9 S3 M3SA6**	506	**S301_4.9 P90 BN90L6**	507
189	54.4	2.4	7.4	4530	**S501_7.4 S3 M3SA4**	510	**S501_7.4 P90 BN90S4**	511
190	54.1	1.9	4.8	3200	**S401_4.8 S3 M3SA6**	508	**S401_4.8 P90 BN90L6**	509
194	53.2	3.3	4.8	4500	**S501_4.8 S3 M3SA6**	510	**S501_4.8 P90 BN90L6**	511
196	52.6	1.5	7.2	3180	**S401_7.2 S3 M3SA4**	508	**S401_7.2 P90 BN90S4**	509
197	52.1	1.0	7.1	1730	**S301_7.1 S3 M3SA4**	506	**S301_7.1 P90 BN90S4**	507
217	47.4	1.7	12.9	4350	**S501_12.9 S2 M2SA2**	510	**S501_12.9 P80 BN80B2**	511
231	44.6	2.0	6.1	3040	**S401_6.1 S3 M3SA4**	508	**S401_6.1 P90 BN90S4**	509
231	44.5	2.9	6.1	4270	**S501_6.1 S3 M3SA4**	510	**S501_6.1 P90 BN90S4**	511
233	44.1	1.3	3.9	1670	**S301_3.9 S3 M3SA6**	506	**S301_3.9 P90 BN90L6**	507
239	43.0	1.2	5.8	1670	**S301_5.8 S3 M3SA4**	506	**S301_5.8 P90 BN90S4**	507
241	42.7	2.5	3.8	2990	**S401_3.8 S3 M3SA6**	508	**S401_3.8 P90 BN90L6**	509
263	39.2	1.0	10.7	2930	**S401_10.7 S2 M2SA2**	508	**S401_10.7 P80 BN80B2**	509
268	38.4	2.2	10.5	4090	**S501_10.5 S2 M2SA2**	510	**S501_10.5 P80 BN80B2**	511
284	36.3	1.4	4.9	1610	**S301_4.9 S3 M3SA4**	506	**S301_4.9 P90 BN90S4**	507
290	35.5	2.5	4.8	2850	**S401_4.8 S3 M3SA4**	508	**S401_4.8 P90 BN90S4**	509
300	34.3	1.7	3.1	1580	**S301_3.1 S3 M3SA6**	506	**S301_3.1 P90 BN90L6**	507
301	34.2	3.1	3.1	2810	**S401_3.1 S3 M3SA6**	508	**S401_3.1 P90 BN90L6**	509
319	32.2	2.6	8.8	3870	**S501_8.8 S2 M2SA2**	510	**S501_8.8 P80 BN80B2**	511
324	31.8	1.5	8.6	2760	**S401_8.6 S2 M2SA2**	508	**S401_8.6 P80 BN80B2**	509
355	29.0	1.7	3.9	1530	**S301_3.9 S3 M3SA4**	506	**S301_3.9 P90 BN90S4**	507
367	28.0	3.2	3.8	2650	**S401_3.8 S3 M3SA4**	508	**S401_3.8 P90 BN90S4**	509
377	27.3	1.1	2.4	1010	**S201_2.4 S3 M3SA6**	504	**S201_2.4 P90 BN90L6**	505
380	27.1	2.1	2.4	1490	**S301_2.4 S3 M3SA6**	506	**S301_2.4 P90 BN90L6**	507
391	26.3	2.4	7.2	2610	**S401_7.2 S2 M2SA2**	508	**S401_7.2 P80 BN80B2**	509
395	26.1	1.5	7.1	1500	**S301_7.1 S2 M2SA2**	506	**S301_7.1 P80 BN80B2**	507
450	22.9	1.1	3.1	990	**S201_3.1 S3 M3SA4**	504	**S201_3.1 P90 BN90S4**	505
457	22.5	2.2	3.1	1430	**S301_3.1 S3 M3SA4**	506	**S301_3.1 P90 BN90S4**	507
462	22.3	3.1	6.1	2490	**S401_6.1 S2 M2SA2**	508	**S401_6.1 P80 BN80B2**	509
479	21.5	1.9	5.8	1420	**S301_5.8 S2 M2SA2**	506	**S301_5.8 P80 BN80B2**	507
481	21.4	1.0	5.8	990	**S201_5.8 S2 M2SA2**	504	**S201_5.8 P80 BN80B2**	505
486	21.2	0.9	1.9	960	**S201_1.9 S3 M3SA6**	504	**S201_1.9 P90 BN90L6**	505
497	20.7	3.4	1.9	2420	**S401_1.9 S3 M3SA6**	508	**S401_1.9 P90 BN90L6**	509

1.5 kW

n_2 min^{-1}	M_2 Nm	S	i	R_{n2} N			IEC	
504	20.4	1.7	1.8	1380	**S301_1.8 S3 M3SA6**	506	**S301_1.8 P90 BN90L6**	507
568	18.1	2.2	4.9	1360	**S301_4.9 S2 M2SA2**	506	**S301_4.9 P80 BN80B2**	507
574	17.9	1.5	2.4	940	**S201_2.4 S3 M3SA4**	504	**S201_2.4 P90 BN90S4**	505
578	17.8	2.8	2.4	1340	**S301_2.4 S3 M3SA4**	506	**S301_2.4 P90 BN90S4**	507
587	17.5	1.2	4.8	950	**S201_4.8 S2 M2SA2**	504	**S201_4.8 P80 BN80B2**	505
654	15.7	2.2	1.4	1290	**S301_1.4 S3 M3SA6**	506	**S301_1.4 P90 BN90L6**	507
661	15.6	1.3	1.4	900	**S201_1.4 S3 M3SA6**	504	**S201_1.4 P90 BN90L6**	505
710	14.5	2.8	3.9	1280	**S301_3.9 S2 M2SA2**	506	**S301_3.9 P80 BN80B2**	507
712	14.5	1.5	3.9	910	**S201_3.9 S2 M2SA2**	504	**S201_3.9 P80 BN80B2**	505
739	13.9	1.2	1.9	890	**S201_1.9 S3 M3SA4**	504	**S201_1.9 P90 BN90S4**	505
767	13.4	2.2	1.8	1240	**S301_1.8 S3 M3SA4**	506	**S301_1.8 P90 BN90S4**	507
900	11.4	1.8	3.1	860	**S201_3.1 S2 M2SA2**	504	**S201_3.1 P80 BN80B2**	505
985	10.4	1.0	1.4	390	**S101_1.4 S3 M3SA4**	502	**S101_1.4 P90 BN90S4**	503
995	10.3	2.9	1.4	1150	**S301_1.4 S3 M3SA4**	506	**S301_1.4 P90 BN90S4**	507
1006	10.2	1.7	1.4	820	**S201_1.4 S3 M3SA4**	504	**S201_1.4 P90 BN90S4**	505
1149	9.0	2.3	2.4	810	**S201_2.4 S2 M2SA2**	504	**S201_2.4 P80 BN80B2**	505
1478	7.0	1.9	1.9	750	**S201_1.9 S2 M2SA2**	504	**S201_1.9 P80 BN80B2**	505
1493	6.9	1.2	1.9	380	**S101_1.9 S2 M2SA2**	502	**S101_1.9 P80 BN80B2**	503
1970	5.2	1.5	1.4	350	**S101_1.4 S2 M2SA2**	502	**S101_1.4 P80 BN80B2**	503
2013	5.1	2.5	1.4	690	**S201_1.4 S2 M2SA2**	504	**S201_1.4 P80 BN80B2**	505

2.2 kW

n_2 min^{-1}	M_2 Nm	S	i	R_{n2} N			IEC	
154	134.1	1.1	6.1	4520	**S501_6.1 S3 M3LC6**	510	**S501_6.1 P112 BN112M6**	511
191	108.1	1.2	7.4	4280	**S501_7.4 S3 M3LA4**	510	**S501_7.4 P100 BN100LA4**	511
192	107.0	1.0	4.8	2880	**S401_4.8 S3 M3LC6**	508	**S401_4.8 P112 BN112M6**	509
196	105.2	1.7	4.8	4230	**S501_4.8 S3 M3LC6**	510	**S501_4.8 P112 BN112M6**	511
232	88.6	1.0	6.1	2790	**S401_6.1 S3 M3LA4**	508	**S401_6.1 P100 BN100LA4**	509
233	88.4	1.5	6.1	4060	**S501_6.1 S3 M3LA4**	510	**S501_6.1 P100 BN100LA4**	511
242	85.1	2.1	3.8	4000	**S501_3.8 S3 M3LC6**	510	**S501_3.8 P112 BN112M6**	511
244	84.4	1.2	3.8	2730	**S401_3.8 S3 M3LC6**	508	**S401_3.8 P112 BN112M6**	509
269	76.6	1.1	10.5	3910	**S501_10.5 S3 M3SA2**	510	**S501_10.5 P90 BN90L2**	511
292	70.6	1.3	4.8	2640	**S401_4.8 S3 M3LA4**	508	**S401_4.8 P100 BN100LA4**	509
297	69.4	2.2	4.8	3790	**S501_4.8 S3 M3LA4**	510	**S501_4.8 P100 BN100LA4**	511
305	67.6	1.6	3.1	2590	**S401_3.1 S3 M3LC6**	508	**S401_3.1 P112 BN112M6**	509
306	67.4	2.4	3.0	3750	**S501_3.0 S3 M3LC6**	510	**S501_3.0 P112 BN112M6**	511
320	64.3	1.3	8.8	3730	**S501_8.8 S3 M3SA2**	510	**S501_8.8 P90 BN90L2**	511
367	56.1	2.7	3.8	3570	**S501_3.8 S3 M3LA4**	510	**S501_3.8 P100 BN100LA4**	511
370	55.7	1.6	3.8	2490	**S401_3.8 S3 M3LA4**	508	**S401_3.8 P100 BN100LA4**	509
380	54.2	1.8	7.4	3540	**S501_7.4 S3 M3SA2**	510	**S501_7.4 P90 BN90L2**	511
384	53.6	1.1	2.4	1260	**S301_2.4 S3 M3LC6**	506	**S301_2.4 P112 BN112M6**	507
386	53.3	2.8	2.4	3500	**S501_2.4 S3 M3LC6**	510	**S501_2.4 P112 BN112M6**	511
389	52.9	2.0	2.4	2450	**S401_2.4 S3 M3LC6**	508	**S401_2.4 P112 BN112M6**	509
393	52.4	1.2	7.2	2460	**S401_7.2 S3 M3SA2**	508	**S401_7.2 P90 BN90L2**	509
460	44.7	1.1	3.1	1240	**S301_3.1 S3 M3LA4**	506	**S301_3.1 P100 BN100LA4**	507
462	44.6	2.0	3.1	2340	**S401_3.1 S3 M3LA4**	508	**S401_3.1 P100 BN100LA4**	509
463	44.5	1.6	6.1	2360	**S401_6.1 S3 M3SA2**	508	**S401_6.1 P90 BN90L2**	509

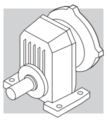

2.2 kW

n2 min-1	M2 Nm	S	i	Rn2 N			IEC	
463	44.4	3.2	3.0	3340	**S501_3.0 S3 M3LA4**	510	**S501_3.0 P100 BN100LA4**	511
464	44.4	2.3	6.1	3340	**S501_6.1 S3 M3SA2**	510	**S501_6.1 P90 BN90L2**	511
481	42.8	0.9	5.8	1250	**S301_5.8 S3 M3SA2**	506	**S301_5.8 P90 BN90L2**	507
502	41.0	1.7	1.9	2280	**S401_1.9 S3 M3LC6**	508	**S401_1.9 P112 BN112M6**	509
520	39.6	3.2	1.8	3210	**S501_1.8 S3 M3LC6**	510	**S501_1.8 P112 BN112M6**	511
570	36.1	1.1	4.9	1220	**S301_4.9 S3 M3SA2**	506	**S301_4.9 P90 BN90L2**	507
581	35.4	2.0	4.8	2210	**S401_4.8 S3 M3SA2**	508	**S401_4.8 P90 BN90L2**	509
582	35.4	1.4	2.4	1190	**S301_2.4 S3 M3LA4**	506	**S301_2.4 P100 BN100LA4**	507
590	34.9	2.6	2.4	2200	**S401_2.4 S3 M3LA4**	508	**S401_2.4 P100 BN100LA4**	509
592	34.8	3.4	4.8	3110	**S501_4.8 S3 M3SA2**	510	**S501_4.8 P90 BN90L2**	511
661	31.2	1.1	1.4	1140	**S301_1.4 S3 M3LC6**	506	**S301_1.4 P112 BN112M6**	507
682	30.2	2.3	1.4	2090	**S401_1.4 S3 M3LC6**	508	**S401_1.4 P112 BN112M6**	509
712	28.9	1.4	3.9	1160	**S301_3.9 S3 M3SA2**	506	**S301_3.9 P90 BN90L2**	507
737	27.9	2.5	3.8	2070	**S401_3.8 S3 M3SA2**	508	**S401_3.8 P90 BN90L2**	509
761	27.0	2.2	1.9	2040	**S401_1.9 S3 M3LA4**	508	**S401_1.9 P100 BN100LA4**	509
772	26.7	1.1	1.8	1120	**S301_1.8 S3 M3LA4**	506	**S301_1.8 P100 BN100LA4**	507
903	22.8	0.9	3.1	730	**S201_3.1 S3 M3SA2**	504	**S201_3.1 P90 BN90L2**	505
918	22.4	1.8	3.1	1100	**S301_3.1 S3 M3SA2**	506	**S301_3.1 P90 BN90L2**	507
921	22.4	3.1	3.1	1940	**S401_3.1 S3 M3SA2**	508	**S401_3.1 P90 BN90L2**	509
1002	20.6	1.5	1.4	1050	**S301_1.4 S3 M3LA4**	506	**S301_1.4 P100 BN100LA4**	507
1034	19.9	3.0	1.4	1860	**S401_1.4 S3 M3LA4**	508	**S401_1.4 P100 BN100LA4**	509
1153	17.9	1.2	2.4	710	**S201_2.4 S3 M3SA2**	504	**S201_2.4 P90 BN90L2**	505
1161	17.7	2.3	2.4	1030	**S301_2.4 S3 M3SA2**	506	**S301_2.4 P90 BN90L2**	507
1483	13.9	0.9	1.9	670	**S201_1.9 S3 M3SA2**	504	**S201_1.9 P90 BN90L2**	505
1539	13.4	1.8	1.8	960	**S301_1.8 S3 M3SA2**	506	**S301_1.8 P90 BN90L2**	507
1997	10.3	2.3	1.4	890	**S301_1.4 S3 M3SA2**	506	**S301_1.4 P90 BN90L2**	507
2020	10.2	1.3	1.4	630	**S201_1.4 S3 M3SA2**	504	**S201_1.4 P90 BN90L2**	505

3.0 kW

n2 min-1	M2 Nm	S	i	Rn2 N			IEC	
198	141.9	1.2	4.8	4040	**S501_4.8 S4 M4SA6**	510	**S501_4.8 P132 BN132S6**	511
233	120.6	1.1	6.1	3910	**S501_6.1 S3 M3LB4**	510	**S501_6.1 P100 BN100LB4**	511
245	114.8	1.5	3.8	3840	**S501_3.8 S4 M4SA6**	510	**S501_3.8 P132 BN132S6**	511
247	113.9	0.9	3.8	2550	**S401_3.8 S4 M4SA6**	508	**S401_3.8 P132 BN132S6**	509
292	96.2	0.9	4.8	2490	**S401_4.8 S3 M3LB4**	508	**S401_4.8 P100 BN100LB4**	509
297	94.6	1.6	4.8	3670	**S501_4.8 S3 M3LB4**	510	**S501_4.8 P100 BN100LB4**	511
308	91.2	1.2	3.1	2440	**S401_3.1 S4 M4SA6**	508	**S401_3.1 P132 BN132S6**	509
309	90.9	1.8	3.0	3630	**S501_3.0 S4 M4SA6**	510	**S501_3.0 P132 BN132S6**	511
326	86.1	1.0	8.8	3600	**S501_8.8 S3 M3LA2**	510	**S501_8.8 P100 BN100L2**	511
367	76.5	2.0	3.8	3470	**S501_3.8 S3 M3LB4**	510	**S501_3.8 P100 BN100LB4**	511
370	75.9	1.2	3.8	2370	**S401_3.8 S3 M3LB4**	508	**S401_3.8 P100 BN100LB4**	509
386	72.6	1.4	7.4	3440	**S501_7.4 S3 M3LA2**	510	**S501_7.4 P100 BN100L2**	511
390	71.9	2.1	2.4	3390	**S501_2.4 S4 M4SA6**	510	**S501_2.4 P132 BN132S6**	511
393	71.4	1.5	2.4	2320	**S401_2.4 S4 M4SA6**	508	**S401_2.4 P132 BN132S6**	509
462	60.8	1.5	3.1	2250	**S401_3.1 S3 M3LB4**	508	**S401_3.1 P100 BN100LB4**	509
463	60.6	2.3	3.0	3260	**S501_3.0 S3 M3LB4**	510	**S501_3.0 P100 BN100LB4**	511
471	59.6	1.2	6.1	2260	**S401_6.1 S3 M3LA2**	508	**S401_6.1 P100 BN100L2**	509

3.0 kW

n_2 min^{-1}	M_2 Nm	S	i	R_{n2} N			IEC	
472	59.4	1.7	6.1	3260	**S501_6.1 S3 M3LA2**	510	**S501_6.1 P100 BN100L2**	511
508	55.3	1.3	1.9	2170	**S401_1.9 S4 M4SA6**	508	**S401_1.9 P132 BN132S6**	509
526	53.4	2.3	1.8	3120	**S501_1.8 S4 M4SA6**	510	**S501_1.8 P132 BN132S6**	511
582	48.2	1.0	2.4	1080	**S301_2.4 S3 M3LB4**	506	**S301_2.4 P100 BN100LB4**	507
586	47.9	2.7	2.4	3040	**S501_2.4 S3 M3LB4**	510	**S501_2.4 P100 BN100LB4**	511
590	47.6	1.9	2.4	2120	**S401_2.4 S3 M3LB4**	508	**S401_2.4 P100 BN100LB4**	509
592	47.4	1.5	4.8	2130	**S401_4.8 S3 M3LA2**	508	**S401_4.8 P100 BN100L2**	509
602	46.6	2.6	4.8	3030	**S501_4.8 S3 M3LA2**	510	**S501_4.8 P100 BN100L2**	511
661	42.4	2.9	1.4	2920	**S501_1.4 S4 M4SA6**	510	**S501_1.4 P132 BN132S6**	511
689	40.7	1.7	1.4	2010	**S401_1.4 S4 M4SA6**	508	**S401_1.4 P132 BN132S6**	509
725	38.7	1.0	3.9	1070	**S301_3.9 S3 M3LA2**	506	**S301_3.9 P100 BN100L2**	507
744	37.7	3.2	3.8	2850	**S501_3.8 S3 M3LA2**	510	**S501_3.8 P100 BN100L2**	511
750	37.4	1.9	3.8	2000	**S401_3.8 S3 M3LA2**	508	**S401_3.8 P100 BN100L2**	509
761	36.9	1.6	1.9	1970	**S401_1.9 S3 M3LB4**	508	**S401_1.9 P100 BN100LB4**	509
789	35.6	3.1	1.8	2780	**S501_1.8 S3 M3LB4**	510	**S501_1.8 P100 BN100LB4**	511
934	30.1	1.3	3.1	1020	**S301_3.1 S3 M3LA2**	506	**S301_3.1 P100 BN100L2**	507
937	30.0	2.3	3.1	1880	**S401_3.1 S3 M3LA2**	508	**S401_3.1 P100 BN100L2**	509
1002	28.0	1.1	1.4	980	**S301_1.4 S3 M3LB4**	506	**S301_1.4 P100 BN100LB4**	507
1034	27.2	2.2	1.4	1820	**S401_1.4 S3 M3LB4**	508	**S401_1.4 P100 BN100LB4**	509
1181	23.8	1.7	2.4	980	**S301_2.4 S3 M3LA2**	506	**S301_2.4 P100 BN100L2**	507
1196	23.5	3.0	2.4	1760	**S401_2.4 S3 M3LA2**	508	**S401_2.4 P100 BN100L2**	509
1544	18.2	2.6	1.9	1630	**S401_1.9 S3 M3LA2**	508	**S401_1.9 P100 BN100L2**	509
1566	17.9	1.3	1.8	910	**S301_1.8 S3 M3LA2**	506	**S301_1.8 P100 BN100L2**	507
2032	13.8	1.7	1.4	850	**S301_1.4 S3 M3LA2**	506	**S301_1.4 P100 BN100L2**	507
2056	13.7	1.0	1.4	580	**S201_1.4 S3 M3LA2**	504	**S201_1.4 P100 BN100L2**	505

4.0 kW

n_2 min^{-1}	M_2 Nm	S	i	R_{n2} N			IEC	
200	187.2	0.9	4.8	3810	**S501_4.8 S4 M4LA6**	510	**S501_4.8 P132 BN132MA6**	511
247	151.4	1.2	3.8	3650	**S501_3.8 S4 M4LA6**	510	**S501_3.8 P132 BN132MA6**	511
293	127.9	1.2	4.8	3530	**S501_4.8 S3 M3LC4**	510	**S501_4.8 P112 BN112M4**	511
312	119.9	1.3	3.0	3470	**S501_3.0 S4 M4LA6**	510	**S501_3.0 P132 BN132MA6**	511
362	103.5	1.4	3.8	3360	**S501_3.8 S3 M3LC4**	510	**S501_3.8 P112 BN112M4**	511
388	96.5	1.0	7.4	3320	**S501_7.4 S3 M3LB2**	510	**S501_7.4 P112 BN112M2**	511
395	94.9	1.6	2.4	3270	**S501_2.4 S4 M4LA6**	510	**S501_2.4 P132 BN132MA6**	511
397	94.2	1.1	2.4	2180	**S401_2.4 S4 M4LA6**	508	**S401_2.4 P132 BN132MA6**	509
455	82.2	1.1	3.1	2130	**S401_3.1 S3 M3LC4**	508	**S401_3.1 P112 BN112M4**	509
457	82.0	1.7	3.0	3170	**S501_3.0 S3 M3LC4**	510	**S501_3.0 P112 BN112M4**	511
474	79.0	1.3	6.1	3160	**S501_6.1 S3 M3LB2**	510	**S501_6.1 P112 BN112M2**	511
513	73.0	1.0	1.9	2050	**S401_1.9 S4 M4LA6**	508	**S401_1.9 P132 BN132MA6**	509
531	70.5	1.8	1.8	3020	**S501_1.8 S4 M4LA6**	510	**S501_1.8 P132 BN132MA6**	511
577	64.8	2.0	2.4	2970	**S501_2.4 S3 M3LC4**	510	**S501_2.4 P112 BN112M4**	511
581	64.4	1.4	2.4	2030	**S401_2.4 S3 M3LC4**	508	**S401_2.4 P112 BN112M4**	509
594	63.0	1.1	4.8	2040	**S401_4.8 S3 M3LB2**	508	**S401_4.8 P112 BN112M2**	509
604	62.0	1.9	4.8	2960	**S501_4.8 S3 M3LB2**	510	**S501_4.8 P112 BN112M2**	511
669	56.0	2.2	1.4	2830	**S501_1.4 S4 M4LA6**	510	**S501_1.4 P132 BN132MA6**	511
697	53.7	1.3	1.4	1920	**S401_1.4 S4 M4LA6**	508	**S401_1.4 P132 BN132MA6**	509

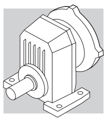

4.0 kW

n2 min-1	M2 Nm	S	i	Rn2 N			IEC	
747	50.1	2.4	3.8	2790	**S501_3.8 S3 M3LB2**	510	**S501_3.8 P112 BN112M2**	511
751	49.9	1.2	1.9	1900	**S401_1.9 S3 M3LC4**	508	**S401_1.9 P112 BN112M4**	509
753	49.7	1.4	3.8	1930	**S401_3.8 S3 M3LB2**	508	**S401_3.8 P112 BN112M2**	509
777	48.2	2.3	1.8	2730	**S501_1.8 S3 M3LC4**	510	**S501_1.8 P112 BN112M4**	511
937	39.9	1.0	3.1	940	**S301_3.1 S3 M3LB2**	506	**S301_3.1 P112 BN112M2**	507
940	39.8	1.8	3.1	1820	**S401_3.1 S3 M3LB2**	508	**S401_3.1 P112 BN112M2**	509
943	39.7	2.8	3.0	2610	**S501_3.0 S3 M3LB2**	510	**S501_3.0 P112 BN112M2**	511
978	38.3	2.9	1.4	2560	**S501_1.4 S3 M3LC4**	510	**S501_1.4 P112 BN112M4**	511
1019	36.7	1.6	1.4	1760	**S401_1.4 S3 M3LC4**	508	**S401_1.4 P112 BN112M4**	509
1185	31.6	1.3	2.4	910	**S301_2.4 S3 M3LB2**	506	**S301_2.4 P112 BN112M2**	507
1192	31.4	3.2	2.4	2430	**S501_2.4 S3 M3LB2**	510	**S501_2.4 P112 BN112M2**	511
1200	31.2	2.2	2.4	1710	**S401_2.4 S3 M3LB2**	508	**S401_2.4 P112 BN112M2**	509
1550	24.2	2.0	1.9	1590	**S401_1.9 S3 M3LB2**	508	**S401_1.9 P112 BN112M2**	509
1572	23.8	1.0	1.8	860	**S301_1.8 S3 M3LB2**	506	**S301_1.8 P112 BN112M2**	507
2039	18.4	1.3	1.4	810	**S301_1.4 S3 M3LB2**	506	**S301_1.4 P112 BN112M2**	507
2105	17.8	2.7	1.4	1460	**S401_1.4 S3 M3LB2**	508	**S401_1.4 P112 BN112M2**	509

5.5 kW

n2 min-1	M2 Nm	S	i	Rn2 N			IEC	
311	165.8	1.0	3.0	3260	**S501_3.0 S4 M4LB6**	510	**S501_3.0 P132 BN132MB6**	511
375	137.3	1.1	3.8	3150	**S501_3.8 S4 M4SA4**	510	**S501_3.8 P132 BN132S4**	511
393	131.1	1.1	2.4	3090	**S501_2.4 S4 M4LB6**	510	**S501_2.4 P132 BN132MB6**	511
473	108.8	1.3	3.0	3000	**S501_3.0 S4 M4SA4**	510	**S501_3.0 P132 BN132S4**	511
477	107.9	0.9	6.1	3020	**S501_6.1 S4 M4SA2**	510	**S501_6.1 P132 BN132SA2**	511
529	97.4	1.3	1.8	2880	**S501_1.8 S4 M4LB6**	510	**S501_1.8 P132 BN132MB6**	511
598	86.1	1.5	2.4	2830	**S501_2.4 S4 M4SA4**	510	**S501_2.4 P132 BN132S4**	511
602	85.5	1.1	2.4	1870	**S401_2.4 S4 M4SA4**	508	**S401_2.4 P132 BN132S4**	509
608	84.6	1.4	4.8	2840	**S501_4.8 S4 M4SA2**	510	**S501_4.8 P132 BN132SA2**	511
665	77.4	1.6	1.4	2720	**S501_1.4 S4 M4LB6**	510	**S501_1.4 P132 BN132MB6**	511
693	74.3	0.9	1.4	1780	**S401_1.4 S4 M4LB6**	508	**S401_1.4 P132 BN132MB6**	509
752	68.4	1.8	3.8	2690	**S501_3.8 S4 M4SA2**	510	**S501_3.8 P132 BN132SA2**	511
758	67.9	1.0	3.8	1810	**S401_3.8 S4 M4SA2**	508	**S401_3.8 P132 BN132SA2**	509
778	66.2	0.9	1.9	1770	**S401_1.9 S4 M4SA4**	508	**S401_1.9 P132 BN132S4**	509
805	63.9	1.7	1.8	2610	**S501_1.8 S4 M4SA4**	510	**S501_1.8 P132 BN132S4**	511
947	54.4	1.3	3.1	1730	**S401_3.1 S4 M4SA2**	508	**S401_3.1 P132 BN132SA2**	509
950	54.2	2.0	3.0	2530	**S501_3.0 S4 M4SA2**	510	**S501_3.0 P132 BN132SA2**	511
1013	50.8	2.2	1.4	2450	**S501_1.4 S4 M4SA4**	510	**S501_1.4 P132 BN132S4**	511
1056	48.7	1.2	1.4	1660	**S401_1.4 S4 M4SA4**	508	**S401_1.4 P132 BN132S4**	509
1200	42.9	2.3	2.4	2370	**S501_2.4 S4 M4SA2**	510	**S501_2.4 P132 BN132SA2**	511
1209	42.6	1.6	2.4	1640	**S401_2.4 S4 M4SA2**	508	**S401_2.4 P132 BN132SA2**	509
1561	33.0	1.5	1.9	1530	**S401_1.9 S4 M4SA2**	508	**S401_1.9 P132 BN132SA2**	509
1616	31.8	2.7	1.8	2170	**S501_1.8 S4 M4SA2**	510	**S501_1.8 P132 BN132SA2**	511
2034	25.3	3.4	1.4	2030	**S501_1.4 S4 M4SA2**	510	**S501_1.4 P132 BN132SA2**	511
2119	24.3	2.0	1.4	1410	**S401_1.4 S4 M4SA2**	508	**S401_1.4 P132 BN132SA2**	509

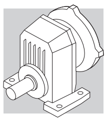

7.5 kW

n_2 min^{-1}	M_2 Nm	S	i	R_{n2} N			IEC	
473	148.4	0.9	3.0	2810	**S501_3.0 S4 M4LA4**	510	**S501_3.0 P132 BN132MA4**	511
534	131.4	1.0	1.8	2690			**S501_1.8 P160 BN160M6**	511
598	117.3	1.1	2.4	2670	**S501_2.4 S4 M4LA4**	510	**S501_2.4 P132 BN132MA4**	511
611	115.0	1.0	4.8	2690	**S501_4.8 S4 M4SB2**	510	**S501_4.8 P132 BN132SB2**	511
672	104.4	1.2	1.4	2560			**S501_1.4 P160 BN160M6**	511
755	93.0	1.3	3.8	2570	**S501_3.8 S4 M4SB2**	510	**S501_3.8 P132 BN132SB2**	511
805	87.1	1.3	1.8	2490	**S501_1.8 S4 M4LA4**	510	**S501_1.8 P132 BN132MA4**	511
950	73.9	0.9	3.1	1610	**S401_3.1 S4 M4SB2**	508	**S401_3.1 P132 BN132SB2**	509
953	73.7	1.5	3.0	2440	**S501_3.0 S4 M4SB2**	510	**S501_3.0 P132 BN132SB2**	511
1013	69.3	1.6	1.4	2350	**S501_1.4 S4 M4LA4**	510	**S501_1.4 P132 BN132MA4**	511
1056	66.5	0.9	1.4	1540	**S401_1.4 S4 M4LA4**	508	**S401_1.4 P132 BN132MA4**	509
1205	58.3	1.7	2.4	2290	**S501_2.4 S4 M4SB2**	510	**S501_2.4 P132 BN132SB2**	511
1213	57.9	1.2	2.4	1540	**S401_2.4 S4 M4SB2**	508	**S401_2.4 P132 BN132SB2**	509
1566	44.8	1.1	1.9	1450	**S401_1.9 S4 M4SB2**	508	**S401_1.9 P132 BN132SB2**	509
1622	43.3	2.0	1.8	2110	**S501_1.8 S4 M4SB2**	510	**S501_1.8 P132 BN132SB2**	511
2041	34.4	2.5	1.4	1980	**S501_1.4 S4 M4SB2**	510	**S501_1.4 P132 BN132SB2**	511
2127	33.0	1.5	1.4	1350	**S401_1.4 S4 M4SB2**	508	**S401_1.4 P132 BN132SB2**	509

9.2 kW

n_2 min^{-1}	M_2 Nm	S	i	R_{n2} N			IEC	
598	143.9	0.9	2.4	2530	**S501_2.4 S4 M4LB4**	510	**S501_2.4 P132 BN132MB4**	511
755	114.1	1.1	3.8	2470	**S501_3.8 S4 M4LA2**	510	**S501_3.8 P132 BN132M2**	511
805	106.9	1.0	1.8	2390	**S501_1.8 S4 M4LB4**	510	**S501_1.8 P132 BN132MB4**	511
953	90.4	1.2	3.0	2360	**S501_3.0 S4 M4LA2**	510	**S501_3.0 P132 BN132M2**	511
1013	85.0	1.3	1.4	2270	**S501_1.4 S4 M4LB4**	510	**S501_1.4 P132 BN132MB4**	511
1205	71.5	1.4	2.4	2220	**S501_2.4 S4 M4LA2**	510	**S501_2.4 P132 BN132M2**	511
1213	71.0	1.0	2.4	1460	**S401_2.4 S4 M4LA2**	508	**S401_2.4 P132 BN132M2**	509
1622	53.1	1.6	1.8	2060	**S501_1.8 S4 M4LA2**	510	**S501_1.8 P132 BN132M2**	511
2041	42.2	2.0	1.4	1930	**S501_1.4 S4 M4LA2**	510	**S501_1.4 P132 BN132M2**	511
2127	40.5	1.2	1.4	1300	**S401_1.4 S4 M4LA2**	508	**S401_1.4 P132 BN132M2**	509

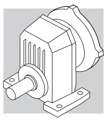

S 10 21 Nm

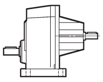	i	n_1 = 2800 min^{-1}					n_1 = 1400 min^{-1}					
		n_2 min^{-1}	M_{n2} Nm	P_{n1} kW	R_{n1} N	R_{n2} N	n_2 min^{-1}	M_{n2} Nm	P_{n1} kW	R_{n1} N	R_{n2} N	
S 10 1_1.4	1.4	1972	8.0	1.7	800	310	986	10.0	1.1	800	390	503
S 10 1_1.9	1.9	1489	8.0	1.3	800	360	745	10.0	0.80	800	460	
S 10 1_2.5	2.5	1120	8.0	0.96	800	420	560	10.0	0.60	800	520	
S 10 1_3.2	3.2	875	10.0	0.93	800	440	438	12.0	0.56	800	560	
S 10 1_3.8	3.8	727	10.0	0.78	800	480	364	12.0	0.47	800	610	
S 10 1_4.7	4.7	592	10.0	0.63	800	520	296	12.0	0.38	800	660	
S 10 1_6.1	6.1	458	12.0	0.59	800	560	229	15.0	0.37	800	710	
S 10 1_6.9	6.9	406	12.0	0.52	800	580	203	15.0	0.33	800	740	
S 10 1_8.9	8.9	315	8.0	0.27	800	700	158	10.0	0.17	800	880	
S 10 1_10.3	10.3	272	8.0	0.23	800	740	136	10.0	0.15	800	930	
S 10 1_12.3	12.3	227	8.0	0.19	800	800	114	10.0	0.12	800	1000	

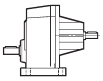	i	n_1 = 900 min^{-1}					n_1 = 500 min^{-1}					
		n_2 min^{-1}	M_{n2} Nm	P_{n1} kW	R_{n1} N	R_{n2} N	n_2 min^{-1}	M_{n2} Nm	P_{n1} kW	R_{n1} N	R_{n2} N	
S 10 1_1.4	1.4	634	12.0	0.81	800	450	352	14.0	0.53	800	560	503
S 10 1_1.9	1.9	479	12.0	0.61	800	520	266	14.0	0.40	800	640	
S 10 1_2.5	2.5	360	12.0	0.46	800	600	200	14.0	0.30	800	740	
S 10 1_3.2	3.2	281	14.0	0.42	800	650	156	17.0	0.28	800	790	
S 10 1_3.8	3.8	234	14.0	0.35	800	700	130	17.0	0.24	800	850	
S 10 1_4.7	4.7	190	14.0	0.28	800	770	106	17.0	0.19	800	930	
S 10 1_6.1	6.1	147	17.0	0.27	800	820	82	21	0.18	800	1000	
S 10 1_6.9	6.9	130	17.0	0.24	800	860	72	21	0.16	800	1040	
S 10 1_8.9	8.9	101	12.0	0.13	800	1020	56	14.0	0.08	800	1200	
S 10 1_10.3	10.3	87	12.0	0.11	800	1080	49	14.0	0.07	800	1200	
S 10 1_12.3	12.3	73	12.0	0.09	800	1160	41	14.0	0.06	800	1200	

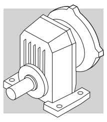

S 20 37 Nm

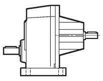	i	n_1 = 2800 min^{-1}					n_1 = 1400 min^{-1}					
		n_2 min^{-1}	M_{n2} Nm	P_{n1} kW	R_{n1} N	R_{n2} N	n_2 min^{-1}	M_{n2} Nm	P_{n1} kW	R_{n1} N	R_{n2} N	
S 20 1_1.4	1.4	2014	13.0	2.8	1000	590	1007	17.0	1.8	1000	740	505
S 20 1_1.9	1.9	1481	13.0	2.1	1000	680	741	17.0	1.3	1000	860	
S 20 1_2.4	2.4	1148	21	2.6	640	680	574	26	1.6	850	860	
S 20 1_3.1	3.1	900	21	2.0	730	750	450	26	1.3	960	950	
S 20 1_3.9	3.9	712	21	1.6	820	840	356	26	0.99	1000	1060	
S 20 1_4.8	4.8	587	21	1.3	910	920	294	26	0.82	1000	1160	
S 20 1_5.8	5.8	481	21	1.1	960	1000	241	26	0.67	1000	1260	
S 20 1_7.2	7.2	388	21	0.87	980	1090	194	26	0.54	1000	1370	
S 20 1_8.5	8.5	329	13.0	0.46	1000	1240	165	17.0	0.30	1000	1500	
S 20 1_10.8	10.8	260	13.0	0.36	1000	1350	130	17.0	0.24	1000	1500	
S 20 1_12.4	12.4	225	13.0	0.31	1000	1430	113	17.0	0.20	1000	1500	

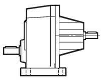	i	n_1 = 900 min^{-1}					n_1 = 500 min^{-1}					
		n_2 min^{-1}	M_{n2} Nm	P_{n1} kW	R_{n1} N	R_{n2} N	n_2 min^{-1}	M_{n2} Nm	P_{n1} kW	R_{n1} N	R_{n2} N	
S 20 1_1.4	1.4	647	20	1.4	1000	850	360	24	0.92	1000	1040	505
S 20 1_1.9	1.9	476	20	1.0	1000	990	265	24	0.68	1000	1210	
S 20 1_2.4	2.4	369	30	1.2	990	990	205	37	0.81	1000	1200	
S 20 1_3.1	3.1	289	30	0.93	1000	1110	161	37	0.64	1000	1340	
S 20 1_3.9	3.9	229	30	0.73	1000	1230	127	37	0.50	1000	1490	
S 20 1_4.8	4.8	189	30	0.60	1000	1350	105	37	0.41	1000	1500	
S 20 1_5.8	5.8	155	30	0.50	1000	1460	86	37	0.34	1000	1500	
S 20 1_7.2	7.2	125	30	0.40	1000	1500	69	37	0.27	1000	1500	
S 20 1_8.5	8.5	106	20	0.23	1000	1500	59	24	0.15	1000	1500	
S 20 1_10.8	10.8	84	20	0.18	1000	1500	47	24	0.12	1000	1500	
S 20 1_12.4	12.4	72	20	0.15	1000	1500	40	24	0.10	1000	1500	

S 30 70 Nm

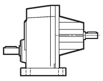	i	n_1 = 2800 min^{-1}					n_1 = 1400 min^{-1}					
		n_2 min^{-1}	M_{n2} Nm	P_{n1} kW	R_{n1} N	R_{n2} N	n_2 min^{-1}	M_{n2} Nm	P_{n1} kW	R_{n1} N	R_{n2} N	
S 30 1_1.4	1.4	1986	24	5.1	1500	770	993	30	3.2	1500	970	507
S 30 1_1.8	1.8	1530	24	3.9	1500	870	765	30	2.5	1500	1090	
S 30 1_2.4	2.4	1157	40	4.9	1270	850	579	50	3.1	1500	1070	
S 30 1_3.1	3.1	915	40	3.9	1470	950	458	50	2.4	1500	1200	
S 30 1_3.9	3.9	711	40	3.0	1500	1070	355	50	1.9	1500	1360	
S 30 1_4.9	4.9	568	40	2.4	1500	1190	284	50	1.5	1500	1500	
S 30 1_5.8	5.8	479	40	2.0	1500	1280	239	50	1.3	1500	1610	
S 30 1_7.1	7.1	395	40	1.7	1500	1390	197	50	1.1	1500	1750	
S 30 1_8.9	8.9	315	24	0.81	1500	1650	157	30	0.50	1500	2080	
S 30 1_10.3	10.3	272	24	0.70	1500	1740	136	30	0.44	1500	2190	
S 30 1_13.1	13.1	213	24	0.55	1500	1900	107	30	0.34	1500	2400	

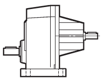	i	n_1 = 900 min^{-1}					n_1 = 500 min^{-1}					
		n_2 min^{-1}	M_{n2} Nm	P_{n1} kW	R_{n1} N	R_{n2} N	n_2 min^{-1}	M_{n2} Nm	P_{n1} kW	R_{n1} N	R_{n2} N	
S 30 1_1.4	1.4	638	35	2.4	1500	1120	355	42	1.6	1500	1360	507
S 30 1_1.8	1.8	492	35	1.8	1500	1260	273	42	1.2	1500	1540	
S 30 1_2.4	2.4	372	58	2.3	1500	1240	207	70	1.5	1500	1510	
S 30 1_3.1	3.1	294	58	1.8	1500	1390	163	70	1.2	1500	1700	
S 30 1_3.9	3.9	228	58	1.4	1500	1570	127	70	0.95	1500	1920	
S 30 1_4.9	4.9	183	58	1.1	1500	1740	101	70	0.76	1500	2120	
S 30 1_5.8	5.8	154	58	0.95	1500	1870	85	70	0.64	1500	2280	
S 30 1_7.1	7.1	127	58	0.79	1500	2030	71	62	0.47	1500	2400	
S 30 1_8.9	8.9	101	35	0.38	1500	2400	56	42	0.25	1500	2400	
S 30 1_10.3	10.3	87	35	0.33	1500	2400	49	42	0.22	1500	2400	
S 30 1_13.1	13.1	69	35	0.26	1500	2400	38	37	0.15	1500	2400	

S 40 125 Nm

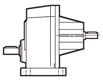	i	n_1 = 2800 min^{-1}					n_1 = 1400 min^{-1}					
		n_2	M_{n2}	P_{n1}	R_{n1}	R_{n2}	n_2	M_{n2}	P_{n1}	R_{n1}	R_{n2}	
		min^{-1}	Nm	kW	N	N	min^{-1}	Nm	kW	N	N	
S 40 1_1.4	1.4	2059	48	10.6	2000	1270	1029	60	6.6	2000	1600	509
S 40 1_1.9	1.9	1514	48	7.8	2000	1450	757	60	4.9	2000	1830	
S 40 1_2.4	2.4	1172	70	8.8	1860	1490	586	90	5.6	2000	1870	
S 40 1_3.1	3.1	918	70	6.9	2000	1660	459	90	4.4	2000	2080	
S 40 1_3.8	3.8	735	70	5.5	2000	1830	367	90	3.5	2000	2290	
S 40 1_4.8	4.8	580	70	4.3	2000	2020	290	90	2.8	2000	2530	
S 40 1_6.1	6.1	461	70	3.5	2000	2220	231	90	2.2	2000	2790	
S 40 1_7.2	7.2	392	63	2.6	2000	2410	196	80	1.7	2000	3030	
S 40 1_8.6	8.6	324	48	1.7	2000	2670	162	60	1.0	2000	3370	
S 40 1_10.7	10.7	262	40	1.1	2000	2930	131	50	0.70	2000	3690	
S 40 1_12.4	12.4	226	40	1.0	2000	3100	113	50	0.60	2000	3800	

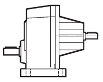	i	n_1 = 900 min^{-1}					n_1 = 500 min^{-1}					
		n_2	M_{n2}	P_{n1}	R_{n1}	R_{n2}	n_2	M_{n2}	P_{n1}	R_{n1}	R_{n2}	
		min^{-1}	Nm	kW	N	N	min^{-1}	Nm	kW	N	N	
S 40 1_1.4	1.4	662	70	4.9	2000	1850	368	85	3.3	2000	2250	509
S 40 1_1.9	1.9	486	70	3.6	2000	2120	270	85	2.5	2000	2580	
S 40 1_2.4	2.4	377	105	4.2	2000	2160	209	125	2.8	2000	2650	
S 40 1_3.1	3.1	295	105	3.3	2000	2400	164	125	2.2	2000	2940	
S 40 1_3.8	3.8	236	105	2.7	2000	2650	131	125	1.8	2000	3240	
S 40 1_4.8	4.8	186	105	2.1	2000	2930	104	125	1.4	2000	3580	
S 40 1_6.1	6.1	148	105	1.7	2000	3220	82	110	1.0	2000	3800	
S 40 1_7.2	7.2	126	90	1.2	2000	3530	70	90	0.67	2000	3800	
S 40 1_8.6	8.6	104	70	0.78	2000	3800	58	85	0.53	2000	3800	
S 40 1_10.7	10.7	84	58	0.52	2000	3800	47	70	0.35	2000	3800	
S 40 1_12.4	12.4	73	58	0.45	2000	3800	40	70	0.30	2000	3800	

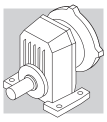

S 50 200 Nm

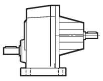	i	n_1 = 2800 min^{-1}					n_1 = 1400 min^{-1}					
		n_2 min^{-1}	M_{n2} Nm	P_{n1} kW	R_{n1} N	R_{n2} N	n_2 min^{-1}	M_{n2} Nm	P_{n1} kW	R_{n1} N	R_{n2} N	
S 50 1_1.4	1.4	1972	85	17.9	730	1720	986	110	11.6	730	2150	511
S 50 1_1.8	1.8	1564	85	14.2	1220	1920	782	110	9.2	1370	2400	
S 50 1_2.4	2.4	1162	100	12.4	930	2110	581	130	8.1	970	2640	
S 50 1_3.0	3.0	921	110	10.8	860	2300	461	140	6.9	1020	2880	
S 50 1_3.8	3.8	729	120	9.3	640	2480	365	150	5.8	860	3130	
S 50 1_4.8	4.8	589	120	7.6	880	2710	295	150	4.7	1160	3420	
S 50 1_6.1	6.1	462	100	4.9	1980	3100	231	130	3.2	2330	3880	
S 50 1_7.4	7.4	378	100	4.0	2060	3340	189	130	2.6	2400	4190	
S 50 1_8.8	8.8	319	85	2.9	2400	3640	160	110	1.9	2400	4570	
S 50 1_10.5	10.5	268	85	2.4	2400	3880	134	110	1.6	2400	4870	
S 50 1_12.9	12.9	217	80	1.9	2400	4200	109	100	1.2	2400	5300	

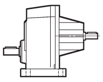	i	n_1 = 900 min^{-1}					n_1 = 500 min^{-1}					
		n_2 min^{-1}	M_{n2} Nm	P_{n1} kW	R_{n1} N	R_{n2} N	n_2 min^{-1}	M_{n2} Nm	P_{n1} kW	R_{n1} N	R_{n2} N	
S 50 1_1.4	1.4	634	125	8.5	1010	2510	352	155	5.8	1040	3040	511
S 50 1_1.8	1.8	503	125	6.7	1730	2790	279	155	4.6	1940	3380	
S 50 1_2.4	2.4	373	150	6.0	1160	3060	207	180	4.0	1530	3730	
S 50 1_3.0	3.0	296	160	5.1	1290	3350	164	200	3.5	1310	4050	
S 50 1_3.8	3.8	234	175	4.4	940	3620	130	200	2.8	1740	4460	
S 50 1_4.8	4.8	189	175	3.5	1290	3960	105	180	2.0	2400	4970	
S 50 1_6.1	6.1	149	150	2.4	2400	4500	83	150	1.3	2400	5620	
S 50 1_7.4	7.4	122	140	1.8	2400	4900	68	140	1.0	2400	6100	
S 50 1_8.8	8.8	103	125	1.4	2400	5310	57	125	0.80	2400	6580	
S 50 1_10.5	10.5	86	115	1.1	2400	5700	48	115	0.60	2400	7050	
S 50 1_12.9	12.9	70	100	0.70	2400	6210	39	100	0.40	2400	7200	

75 ANBAUMÖGLICHKEITEN

In den folgenden Tabellen werden die von den Größen her gesehenen möglichen Passungen angegeben.

Die angemessene Getriebewahl muss unter Befolgung der im Paragraph 12 gegebenen Anleitungen und auf der Grundlage der Auswahltabelle der technischen Daten erfolgen.

(E 69)

		IEC_ 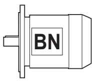 (IM B5)								
		BN								
$P_{n1}^{(\#)}$ [kW]	**2p**	0.37	0.75	1.5	2.2	4	4	9.2	18.5	22
	4p	0.25	0.55	1.1	1.85	3	4	9.2	15	22
	6p	0.12	0.37	0.75	1.1	1.85	2.2	5.5	11	15
		P63	**P71**	**P80**	**P90**	**P100**	**P112**	**P132**	**P160**	**P180**
S 10 1	**i =**	1.4_12.3	1.4_12.3	1.4_8.9	1.4_8.9	1.4_8.9	1.4_8.9			
S 20 1		1.9_12.4	1.9_12.4	1.4_10.8	1.4_10.8	1.4_10.8	1.4_10.8			
S 30 1		2.4_13.1	2.4_13.1	1.4_13.1	1.4_13.1	1.4_13.1	1.4_13.1	1.4_4.9		
S 40 1		3.1_12.4	3.1_12.4	1.4_12.4	1.4_12.4	1.4_12.4	1.4_12.4	1.4_6.1		
S 50 1		3.8_12.9	3.8_12.9	1.4_12.9	1.4_12.9	1.4_12.9	1.4_12.9	1.4_7.4	1.4_7.4	1.4_7.4

(#) P_{n1} = max. installierbare Leistung für IEC Motoradapter P_

(E 70)

		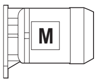					
		M05	**M1**	**M2**	**M3**	**M4**	**M5**
S 10 1	**i =**	1.4_12.3	1.4_6.9	1.4_8.9	1.4_8.9		
S 20 1		1.9_12.4	1.9_8.5	1.4_10.8	1.4_10.8		
S 30 1			2.4_10.3	1.4_13.1	1.4_13.1	1.4_4.9	
S 40 1			3.1_12.4	1.4_12.4	1.4_12.4	1.4_6.1	
S 50 1			3.8_12.9	1.4_12.9	1.4_12.9	1.4_7.4	1.4_7.4

76 TRÄGHEITSMOMENT

Die In den folgenden Tabellen angegebenen Trägheitsmomente Jr [kgm^2] beziehen sich auf die Getriebeantriebsachse. Um das Lesen der Tabellen zu erleichtern, werden folgende Symbole ver-wendet:

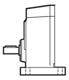

Daten beziehen sich auf Kompaktgetriebe ohne Motor. Um das Gesamtträgheitsmoment des Getriebemotors zu ermitteln, muss nur das Trägheitsmoment des Getriebes mit dem Trägheitsmoment des entsprechenden Motors addiert werden (Wert Elektromotorenauswahltabellen entnehmen).

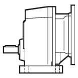

Nur Getriebe vorbereitet für IEC-Motor (IEC-Größe...).

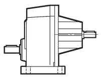

Dieses Symbol bezieht sich auf Getriebewerte.

S 10

	i	**J** ($\bullet 10^{-4}$) [kgm^2]							
		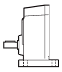			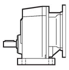 **IEC**				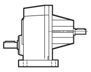
			63	**71**	**80**	**90**	**100**	**112**	
S 10 1_1.4	1.4	0.33	1.8	1.8	3.2	3.1	4.4	4.4	1.2
S 10 1_1.9	1.9	0.22	1.7	1.7	3.1	3.0	4.3	4.3	1.1
S 10 1_2.5	2.5	0.16	1.6	1.6	3.0	2.9	4.2	4.2	1.0
S 10 1_3.2	3.2	0.10	1.6	1.6	3.0	2.9	4.2	4.2	0.97
S 10 1_3.8	3.8	0.08	1.5	1.5	2.9	2.9	4.2	4.2	0.95
S 10 1_4.7	4.7	0.06	1.5	1.5	2.9	2.8	4.1	4.1	0.93
S 10 1_6.1	6.1	0.04	1.5	1.5	2.9	2.8	4.1	4.1	0.92
S 10 1_6.9	6.9	0.03	1.5	1.5	2.9	2.8	4.1	4.1	0.91
S 10 1_8.9	8.9	0.02	1.5	1.5	2.9	2.8	4.1	4.1	0.90
S 10 1_10.3	10.3	0.02	1.5	1.5	—	—	—	—	0.89
S 10 1_12.3	12.3	0.01	1.5	1.5	—	—	—	—	0.89

S 20

	i	**J** (•10^{-4}) [kgm^2]							
			IEC						
			63	**71**	**80**	**90**	**100**	**112**	
S 20 1_1.4	1.4	0.73	—	—	3.6	3.5	4.8	4.8	2.7
S 20 1_1.9	1.9	0.48	1.9	1.9	3.3	3.3	4.6	4.6	2.4
S 20 1_2.4	2.4	0.34	1.8	1.8	3.2	3.1	4.4	4.4	2.3
S 20 1_3.1	3.1	0.20	1.7	1.7	3.0	3.0	4.3	4.3	2.1
S 20 1_3.9	3.9	0.14	1.6	1.6	3.0	2.9	4.2	4.2	2.1
S 20 1_4.8	4.8	0.12	1.6	1.6	3.0	2.9	4.2	4.2	2.0
S 20 1_5.8	5.8	0.08	1.6	1.5	2.9	2.9	4.2	4.2	2.0
S 20 1_7.2	7.2	0.06	1.5	1.5	2.9	2.8	4.1	4.1	2.0
S 20 1_8.5	8.5	0.05	1.5	1.5	2.9	2.8	4.1	4.1	2.0
S 20 1_10.8	10.8	0.03	1.5	1.5	2.9	2.8	4.1	4.1	1.9
S 20 1_12.4	12.4	0.02	1.5	1.5	—	—	—	—	1.9

S 30

	i	**J** (•10^{-4}) [kgm^2]								
			IEC							
			63	**71**	**80**	**90**	**100**	**112**	**132**	
S 30 1_1.4	1.4	1.5	—	—	4.3	4.3	5.6	5.6	18	3.8
S 30 1_1.8	1.8	1.1	—	—	3.9	3.8	5.1	5.1	18	3.4
S 30 1_2.4	2.4	0.59	2.1	2.0	3.4	3.4	4.7	4.7	17	2.9
S 30 1_3.1	3.1	0.45	1.9	1.9	3.3	3.2	4.5	4.5	17	2.8
S 30 1_3.9	3.9	0.33	1.8	1.8	3.2	3.1	4.4	4.4	17	2.7
S 30 1_4.9	4.9	0.24	1.7	1.7	3.1	3.0	4.3	4.3	17	2.6
S 30 1_5.8	5.8	0.19	1.7	1.7	3.0	3.0	4.3	4.3	—	2.6
S 30 1_7.1	7.1	0.14	1.6	1.6	3.0	2.9	4.2	4.2	—	2.5
S 30 1_8.9	8.9	0.10	1.6	1.6	2.9	2.9	4.2	4.2	—	2.5
S 30 1_10.3	10.3	0.08	1.5	1.5	2.9	2.9	4.2	4.2	—	2.4
S 30 1_13.1	13.1	0.05	1.5	1.5	2.9	2.8	4.1	4.1	—	2.4

S 40

	i	**J** (•10^{-4}) [kgm^2]								
		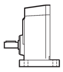	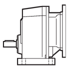 **IEC**							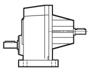
			63	**71**	**80**	**90**	**100**	**112**	**132**	
S 40 1_1.4	1.4	3.7	—	—	6.5	6.5	7.8	7.8	23	14
S 40 1_1.9	1.9	2.4	—	—	5.2	5.2	6.5	6.5	21	13
S 40 1_2.4	2.4	1.6	—	—	4.4	4.4	5.7	5.7	21	12
S 40 1_3.1	3.1	1.1	2.6	2.6	4.0	3.9	5.2	5.2	20	12
S 40 1_3.8	3.8	0.82	2.3	2.3	3.7	3.6	4.9	4.9	18	11
S 40 1_4.8	4.8	0.50	2.0	2.0	3.3	3.3	4.6	4.6	18	11
S 40 1_6.1	6.1	0.39	1.8	1.8	3.2	3.2	4.5	4.5	18	11
S 40 1_7.2	7.2	0.30	1.8	1.8	3.1	3.1	4.4	4.4	—	11
S 40 1_8.6	8.6	0.22	1.7	1.7	3.1	3.0	4.3	4.3	—	11
S 40 1_10.7	10.7	0.15	1.6	1.6	3.0	2.9	4.2	4.2	—	11
S 40 1_12.4	12.4	0.12	1.6	1.6	3.0	2.8	4.2	4.2	—	11

S 50

	i	**J** (•10^{-4}) [kgm^2]										
		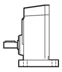	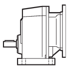 **IEC**									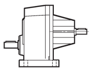
			63	**71**	**80**	**90**	**100**	**112**	**132**	**160**	**180**	
S 50 1_1.4	1.4	8.2	—	—	11	11	12	12	27	86	84	19
S 50 1_1.8	1.8	5.9	—	—	8.8	8.7	10	10	25	84	82	16
S 50 1_2.4	2.4	3.9	—	—	6.8	6.7	8.0	8.0	23	82	80	14
S 50 1_3.0	3.0	2.7	—	—	5.5	5.5	6.8	6.8	22	81	79	13
S 50 1_3.8	3.8	1.9	3.3	3.3	4.7	4.6	5.9	5.9	21	80	78	12
S 50 1_4.8	4.8	1.4	2.8	2.8	4.2	4.1	5.4	5.4	21	79	77	12
S 50 1_6.1	6.1	0.89	2.4	2.4	3.7	3.7	5.0	5.0	21	79	77	11
S 50 1_7.4	7.4	0.63	2.1	2.1	3.5	3.4	4.7	4.7	20	79	77	11
S 50 1_8.8	8.8	0.50	2.0	2.0	3.4	3.3	4.6	4.6	—	—	—	11
S 50 1_10.5	10.5	0.36	1.8	1.8	3.2	3.1	4.4	4.4	—	—	—	11
S 50 1_12.9	12.9	0.25	1.7	1.7	3.1	3.0	4.3	4.3	—	—	—	11

S 10...M

P

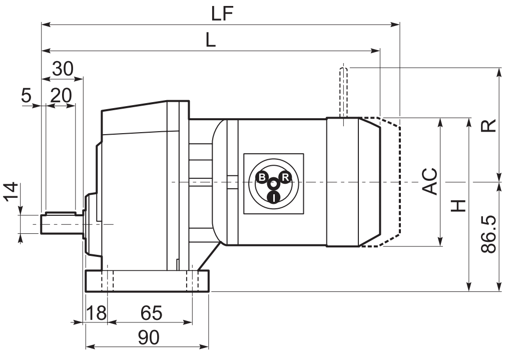
LF
L
30
5
20
14
AC
H
R
86.5
18
65
90

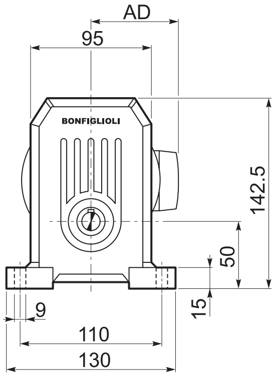
AD
95
BONFIGLIOLI
142.5
50
15
9
110
130

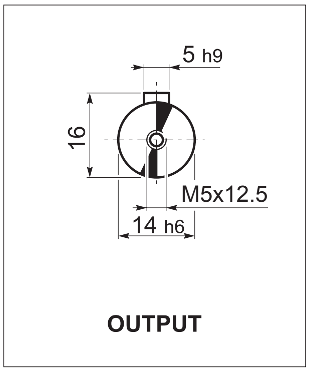
5 h9
16
M5x12.5
14 h6
OUTPUT

F

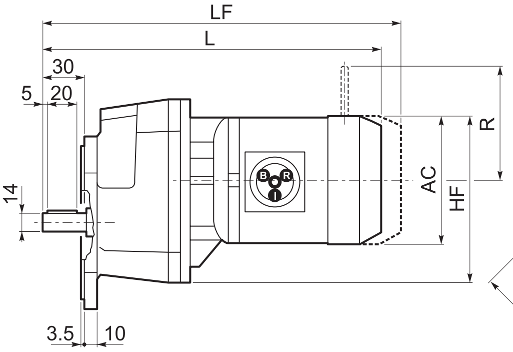
LF
L
30
5
20
14
AC
HF
R
3.5
10

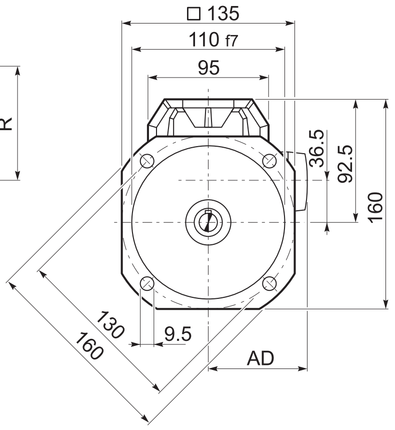
□ 135
110 f7
95
36.5
92.5
160
130
160
9.5
AD

			AC	H	HF	L	AD	Kg	M...FD M...FA LF	Kg	M...FD R	AD	M...FA R	AD
S 10 1	**S05**	**M05**	121	147	143	315	95	8	381	11	96	122	116	95
S 10 1	**S1**	**M1**	137	155	151	344	102	10	405	13	103	135	124	108
S 10 1	**S2**	**M2S**	156	164	160	367	111	13	443	17	129	146	134	119
S 10 1	**S3**	**M3S**	195	184	180	416	135	19	512	24	160	158	160	142
S 10 1	**S3**	**M3L**	195	184	180	448	135	21	539	26	160	158	160	142

S 10...P (IEC)

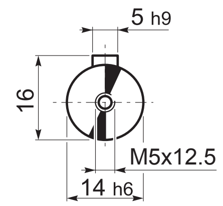
5 h9
16
M5x12.5
14 h6

OUTPUT

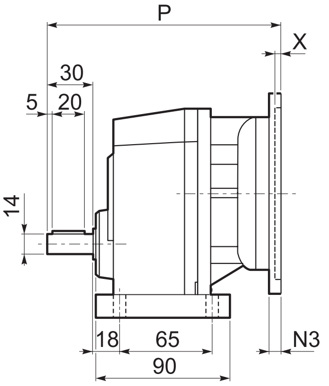
P
X
30
5
20
14
18
65
90
N3

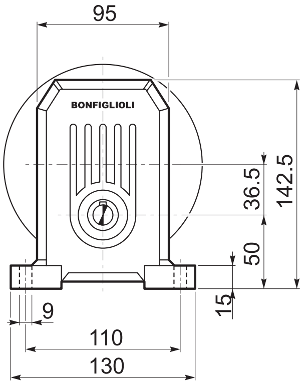
95
BONFIGLIOLI
36.5
142.5
50
15
9
110
130

P

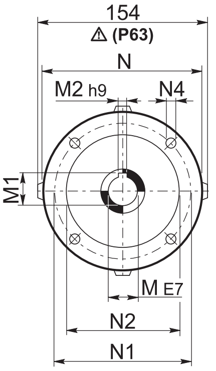
154
⚠ (P63)
N
M2 h9
N4
M1
M E7
N2
N1

INPUT

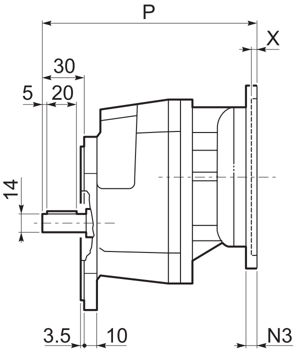
P
X
30
5
20
14
3.5
10
N3

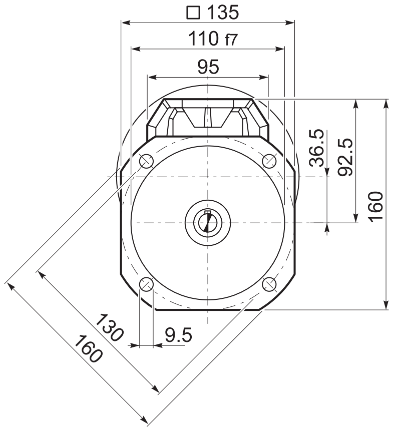
□ 135
110 f7
95
36.5
92.5
160
130
9.5
160

F

		M	M1	M2	N	N1	N2	N3	N4	P	X	Kg
S 10 1	**P63**	11	12.8	4	140	115	95	—	M8x10	189	4	5
S 10 1	**P71**	14	16.3	5	160	130	110	—	M8x10	189	4.5	5
S 10 1	**P80**	19	21.8	6	200	165	130	—	M10x14.5	208	4	6
S 10 1	**P90**	24	27.3	8	200	165	130	—	M10x14.5	208	4	6
S 10 1	**P100**	28	31.3	8	250	215	180	—	M12x16	218	4.5	10
S 10 1	**P112**	28	31.3	8	250	215	180	—	M12x16	218	4.5	10

S 10...HS

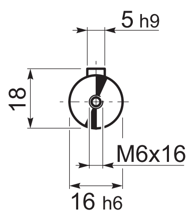
5 h9
18
M6x16
16 h6

INPUT

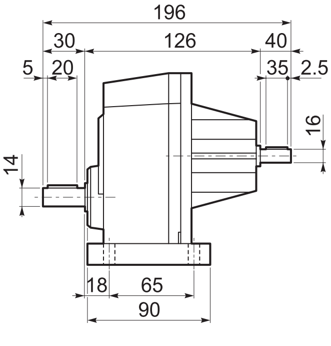
196
30
126
40
5
20
35
2.5
16
14
18
65
90

P

Kg	4.4

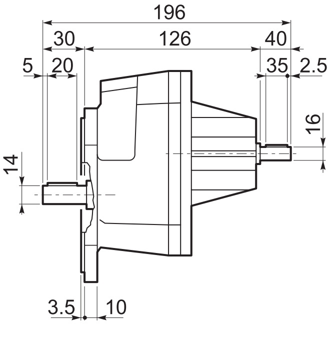
196
30
126
40
5
20
35
2.5
16
14
3.5
10

F

Kg	4.5

S 20...M

P

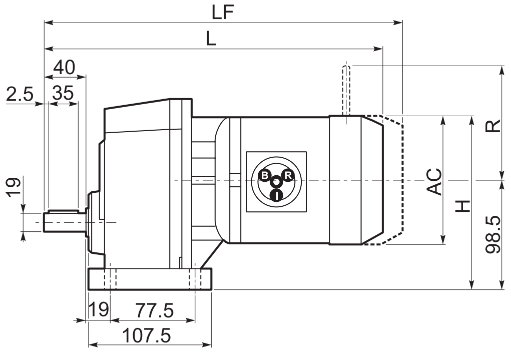
LF
L
40
2.5
35
19
R
AC
H
98.5
19
77.5
107.5

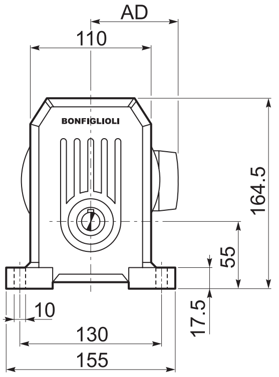
AD
110
BONFIGLIOLI
164.5
55
10
130
155
17.5

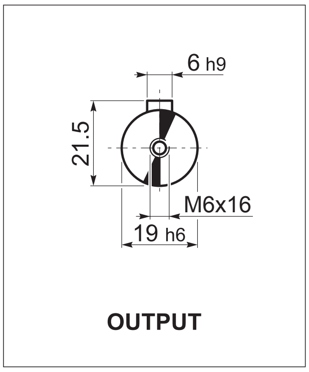
6 h9
21.5
M6x16
19 h6
OUTPUT

F

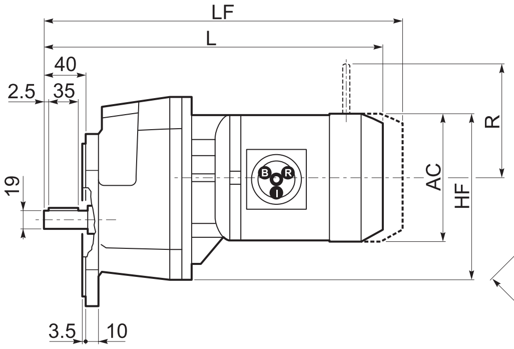
LF
L
40
2.5
35
19
R
AC
HF
3.5
10

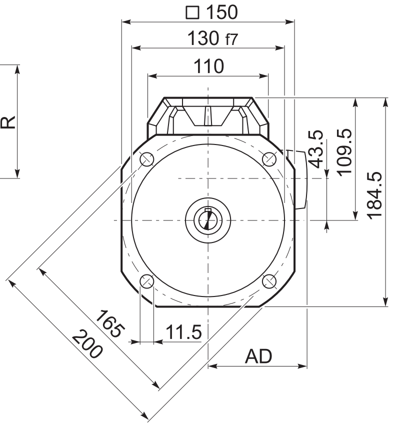
□ 150
130 f7
110
43.5
109.5
184.5
165
200
11.5
AD

									M...FD M...FA		M...FD		M...FA	
			AC	H	HF	L	AD	Kg	LF	Kg	R	AD	R	AD
S 20 1	**S05**	**M05**	121	159	153	333.5	95	10	399.5	12	96	122	116	95
S 20 1	**S1**	**M1**	137	167	161	362.5	102	12	423.5	14	103	135	124	108
S 20 1	**S2**	**M2S**	156	176	170	385.5	111	16	461.5	19	129	146	134	119
S 20 1	**S3**	**M3S**	195	196	190	434.5	135	20	530.5	25	160	158	160	142
S 20 1	**S3**	**M3L**	195	196	190	466.5	135	26	557.5	31	160	158	160	142

S 20...P(IEC)

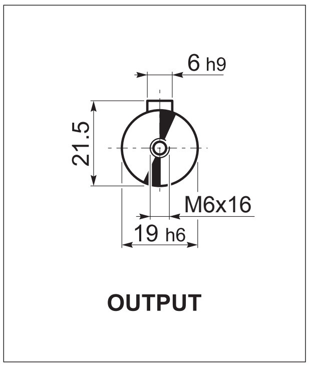
6 h9
21.5
M6x16
19 h6
OUTPUT

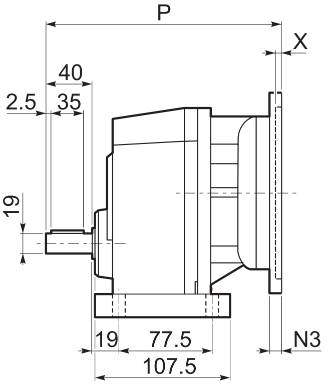
P
X
40
2.5
35
19
19
77.5
107.5
N3

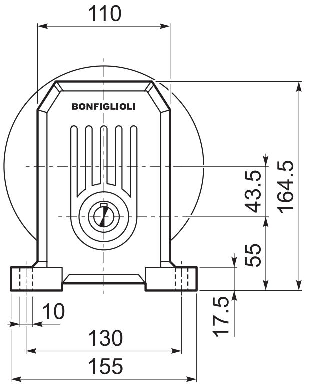
110
BONFIGLIOLI
43.5
164.5
55
17.5
10
130
155

P

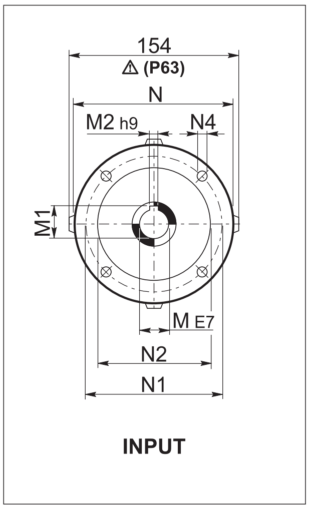
154
⚠ (P63)
N
M2 h9
N4
M1
M E7
N2
N1
INPUT

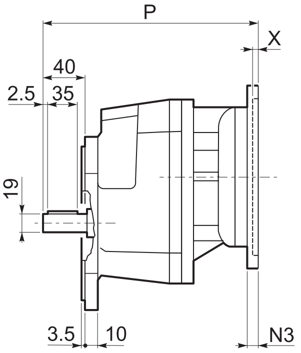
P
X
40
2.5
35
19
3.5
10
N3

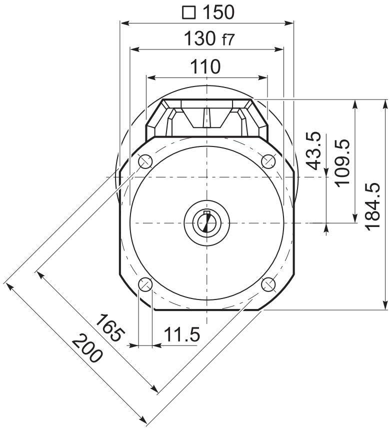
□ 150
130 f7
110
43.5
109.5
184.5
165
200
11.5

F

		M	M1	M2	N	N1	N2	N3	N4	P	X	Kg
S 20 1	**P63**	11	12.8	4	140	115	95	—	M8x10	207	4	6
S 20 1	**P71**	14	16.3	5	160	130	110	—	M8x10	207	4.5	6
S 20 1	**P80**	19	21.8	6	200	165	130	—	M10x14.5	227	4	7
S 20 1	**P90**	24	27.3	8	200	165	130	—	M10x14.5	227	4	7
S 20 1	**P100**	28	31.3	8	250	215	180	—	M12x16	237	4.5	11
S 20 1	**P112**	28	31.3	8	250	215	180	—	M12x16	237	4.5	11

S 20...HS

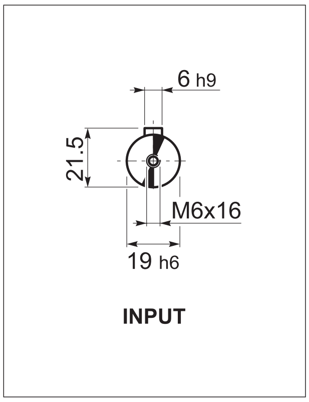
6 h9
21.5
M6x16
19 h6
INPUT

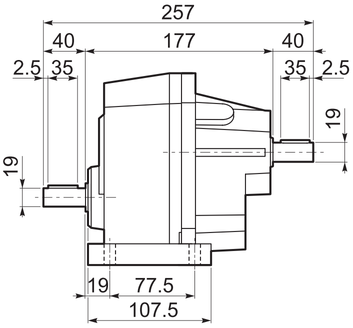
257
40
177
40
2.5
35
35
2.5
19
19
19
77.5
107.5

P

Kg	6.0

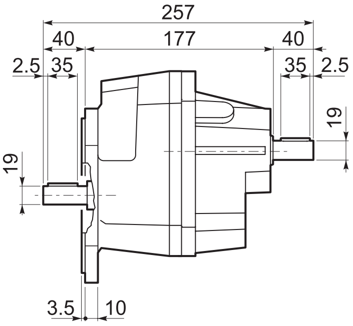
257
40
177
40
2.5
35
35
2.5
19
19
3.5
10

F

Kg	6.2

S 30...M

P

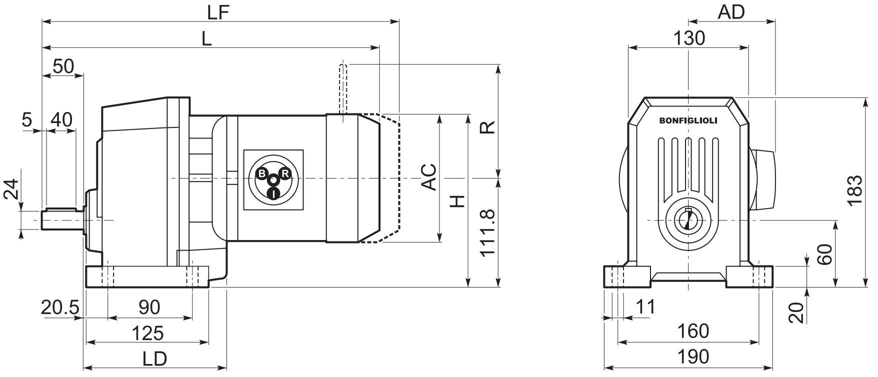
LF
L
50
5
40
24
R
AC
H
111.8
20.5
90
125
LD
AD
130
BONFIGLIOLI
183
60
20
11
160
190

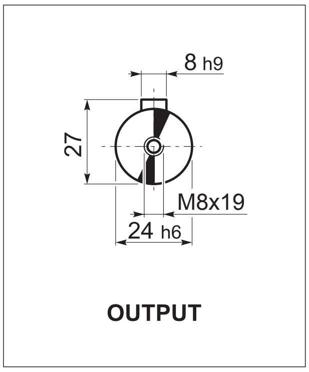
8 h9
27
M8x19
24 h6
OUTPUT

F

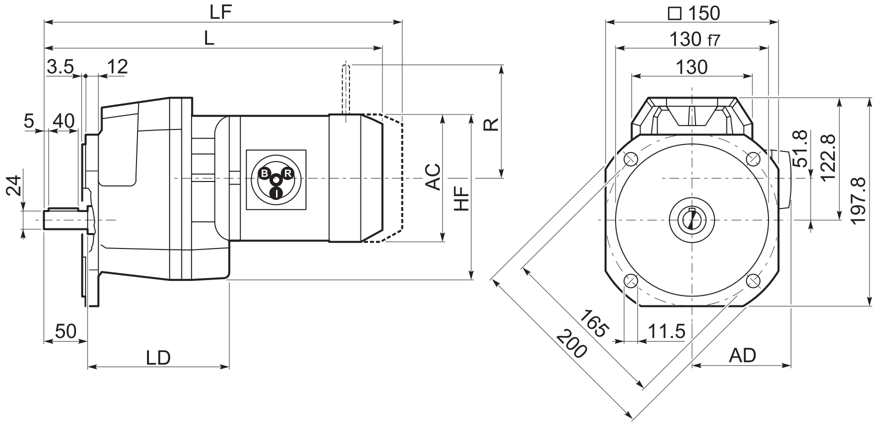
LF
L
3.5
12
5
40
24
R
AC
HF
50
LD
□ 150
130 f7
130
51.8
122.8
197.8
165
200
11.5
AD

									M...FD M...FA		M...FD		M...FA	
			AC	H	HF	L	LD	AD	Kg	LF	Kg	R	AD	R	AD
S 30 1	**S1**	**M1**	137	180	177	387.5	140.5	102	14	448.5	16	103	135	124	108
S 30 1	**S2**	**M2S**	156	190	186	410.5	152.5	111	18	486.5	21	129	146	134	119
S 30 1	**S3**	**M3S**	195	209	206	459.5	162.5	135	23	555.5	28	160	158	160	142
S 30 1	**S3**	**M3L**	195	209	206	491.5	162.5	135	32	582.5	37	160	158	160	142
S 30 1	**S4**	**M4**	258	240.8	237	599.5	—	193	71	708.5	87	226	210	217	193
S 30 1	**S4**	**M4LC**	258	240.8	237	634.5	—	193	79	733.5	95	226	210	217	193

S 30...P(IEC)

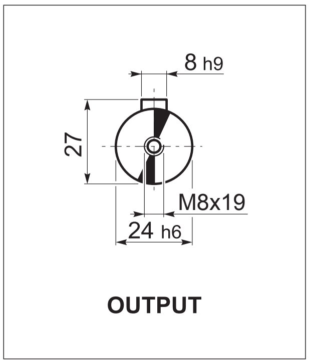
8 h9
27
M8x19
24 h6
OUTPUT

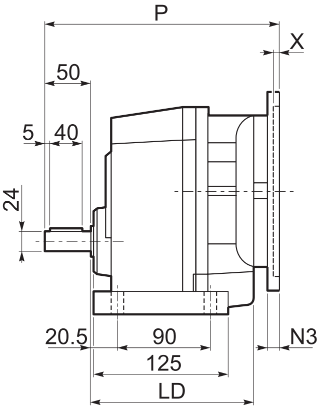
P
X
50
5
40
24
20.5
90
125
LD
N3

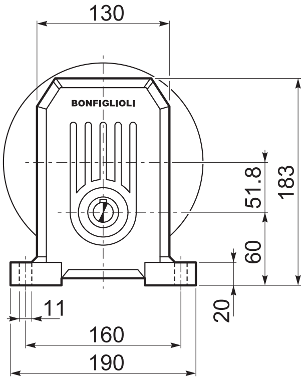
130
BONFIGLIOLI
51.8
183
60
20
11
160
190

P

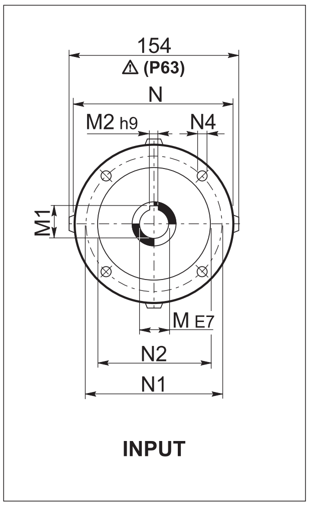
154
⚠ (P63)
N
M2 h9
N4
M1
M E7
N2
N1
INPUT

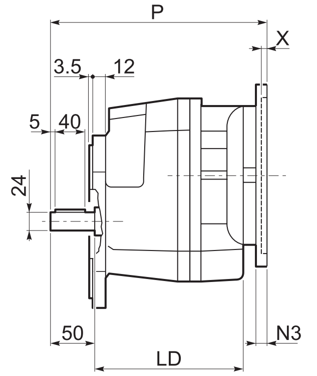
P
X
3.5
12
5
40
24
50
LD
N3

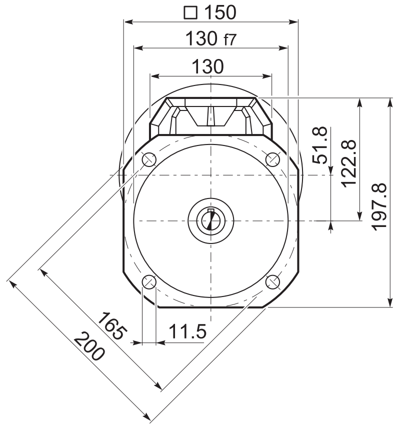
□ 150
130 f7
130
51.8
122.8
197.8
165
200
11.5

F

		LD	M	M1	M2	N	N1	N2	N3	N4	P	X	Kg
S 30 1	**P63**	152.5	11	12.8	4	140	115	95	—	M8x10	232	4	8
S 30 1	**P71**	152.5	14	16.3	5	160	130	110	—	M8x10	232	4.5	8
S 30 1	**P80**	162.5	19	21.8	6	200	165	130	—	M10x14.5	252	4	9
S 30 1	**P90**	162.5	24	27.3	8	200	165	130	—	M10x14.5	252	4	9
S 30 1	**P100**	162.5	28	31.3	8	250	215	180	—	M12x16	262	4.5	13
S 30 1	**P112**	162.5	28	31.3	8	250	215	180	—	M12x16	262	4.5	13
S 30 1	**P132**	—	38	41.3	10	300	265	230	16	14	298.5	5	21

S 30...HS

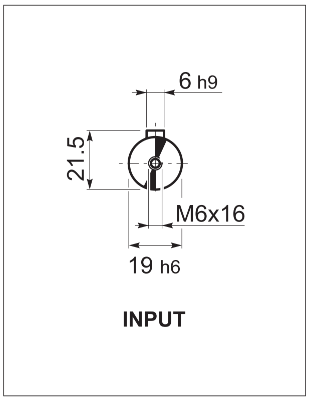
6 h9
21.5
M6x16
19 h6
INPUT

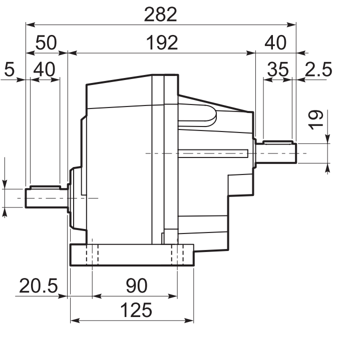
282
50
192
40
5
40
35
2.5
19
24
20.5
90
125

P

Kg	9.0

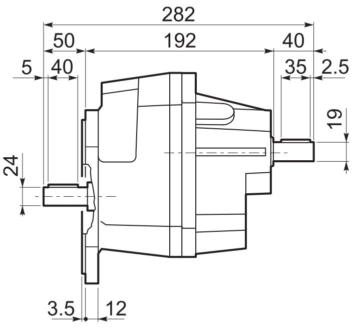
282
50
192
40
5
40
35
2.5
19
24
3.5
12

F

Kg	9.3

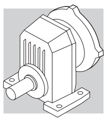

S 40...M

P

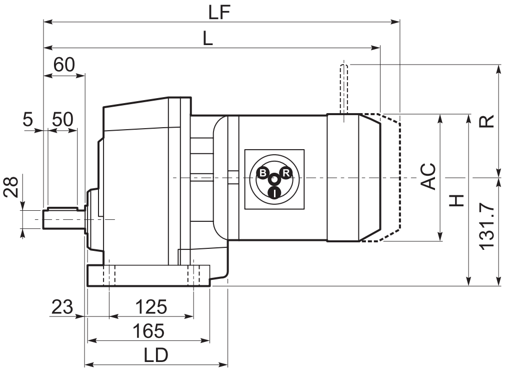
LF
L
60
5
50
28
B
R
I
AC
H
R
131.7
23
125
165
LD

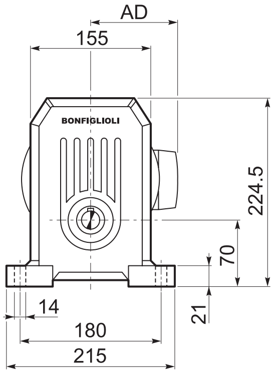
AD
155
BONFIGLIOLI
224.5
70
14
180
215
21

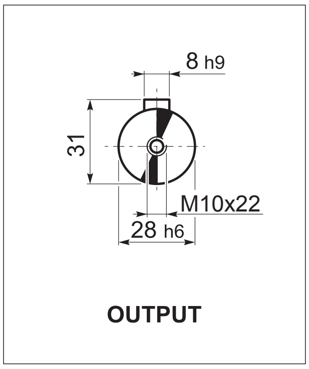
8 h9
31
M10x22
28 h6
OUTPUT

F

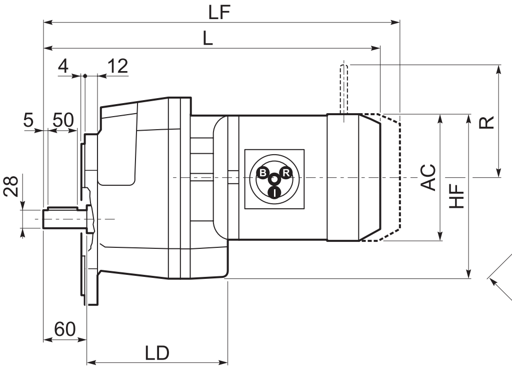
LF
L
4
12
5
50
28
B
R
I
AC
HF
R
60
LD

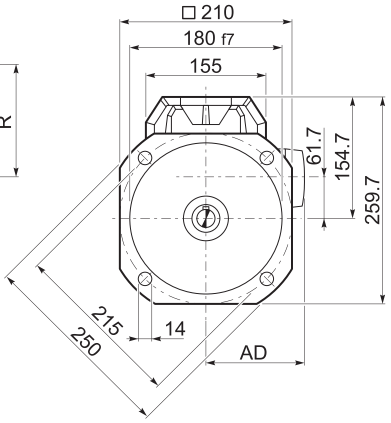
□ 210
180 f7
155
61.7
154.7
259.7
215
250
14
AD

										M...FD M...FA		M...FD		M...FA	
			AC	H	HF	L	LD	AD	Kg	LF	Kg	R	AD	R	AD
S 40 1	**S1**	**M1**	137	200	197	429.5	168	102	28	490.5	31	103	135	124	108
S 40 1	**S2**	**M2S**	156	210	206	452.5	183.5	111	34	528.5	37	129	146	134	119
S 40 1	**S3**	**M3S**	195	229	226	501.5	199.5	135	39	597.5	44	160	158	160	142
S 40 1	**S3**	**M3L**	195	229	226	533.5	199.5	135	48	624.5	53	160	158	160	142
S 40 1	**S4**	**M4**	258	261	257	641.5	—	193	74	750.5	86	226	210	217	193
S 40 1	**S4**	**M4LC**	258	261	257	676.5	—	193	90	775.5	106	226	210	217	193

S 40...P(IEC)

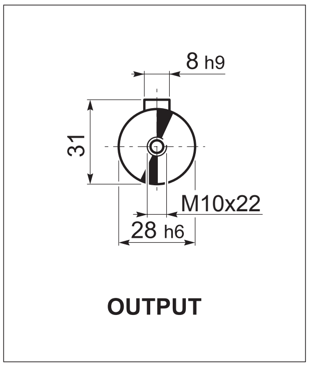
8 h9
31
M10x22
28 h6

OUTPUT

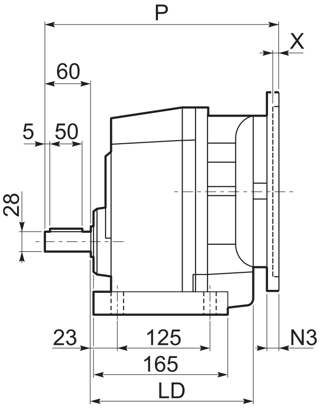
P
X
60
5
50
28
23
125
165
LD
N3

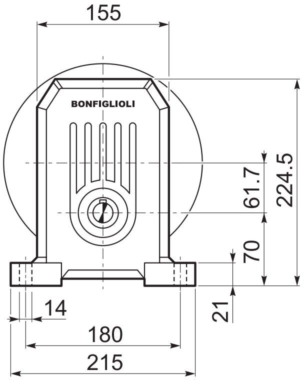
155
BONFIGLIOLI
61.7
224.5
70
21
14
180
215

P

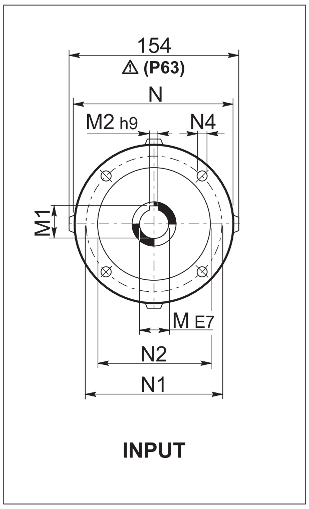
154
⚠ (P63)
N
M2 h9
N4
M1
M E7
N2
N1

INPUT

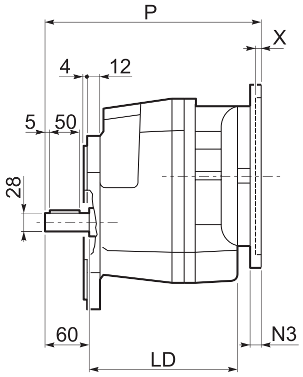
P
X
4
12
5
50
28
60
LD
N3

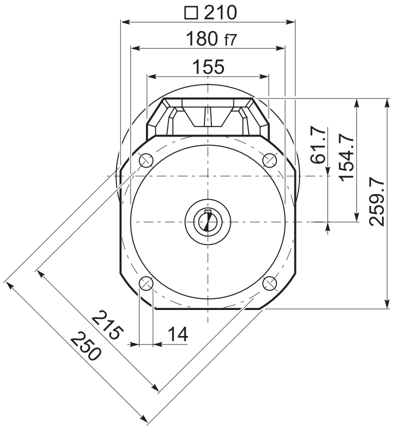
□ 210
180 f7
155
61.7
154.7
259.7
215
250
14

F

		LD	M	M1	M2	N	N1	N2	N3	N4	P	X	Kg
S 40 1	**P63**	183.5	11	12.8	4	140	115	95	—	M8x10	274	4	25
S 40 1	**P71**	183.5	14	16.3	5	160	130	110	—	M8x10	274	4.5	26
S 40 1	**P80**	199.5	19	21.8	6	200	165	130	—	M10x14.5	294	4	26
S 40 1	**P90**	199.5	24	27.3	8	200	165	130	—	M10x14.5	294	4	30
S 40 1	**P100**	—	28	31.3	8	250	215	180	—	M12x16	304	4.5	30
S 40 1	**P112**	—	28	31.3	8	250	215	180	—	M12x16	304	4.5	30
S 40 1	**P132**	—	38	41.3	10	300	265	230	16	14	340	5	32

S 40...HS

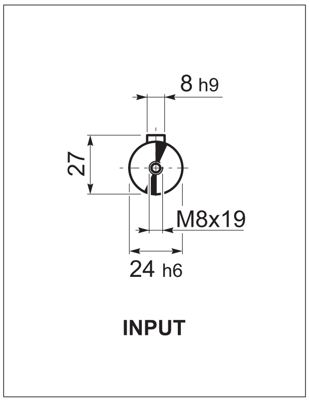
8 h9
27
M8x19
24 h6

INPUT

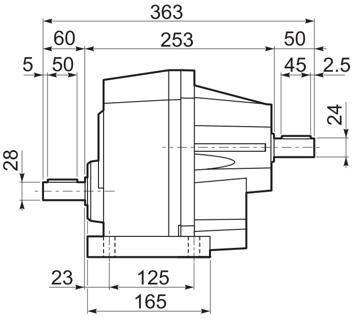
363
60
253
50
5
50
45
2.5
24
28
23
125
165

P

Kg	26.0

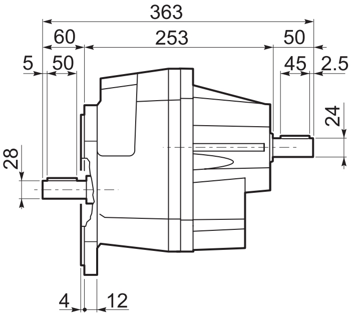
363
60
253
50
5
50
45
2.5
24
28
4
12

F

Kg	27.7

S 50...M

P

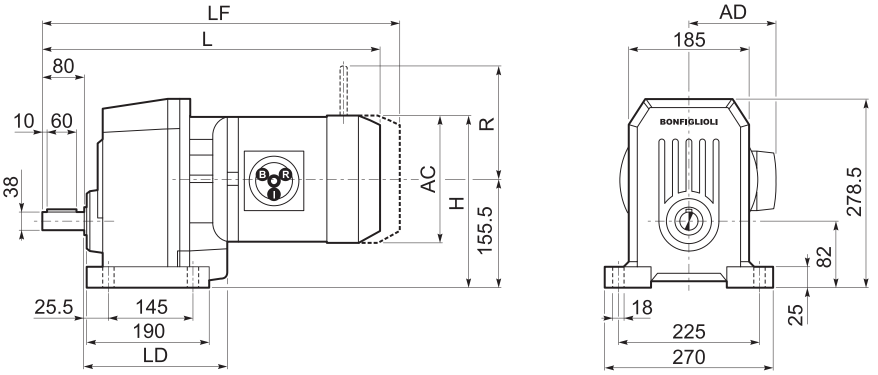
LF
L
80
10
60
38
25.5
145
190
LD
AC
H
R
155.5
AD
185
BONFIGLIOLI
278.5
82
25
18
225
270

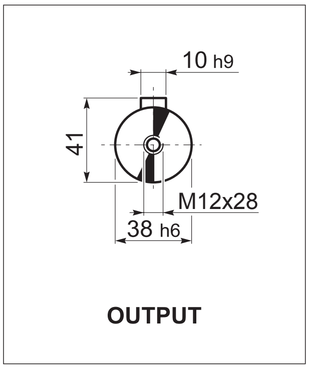
10 h9
41
M12x28
38 h6
OUTPUT

F

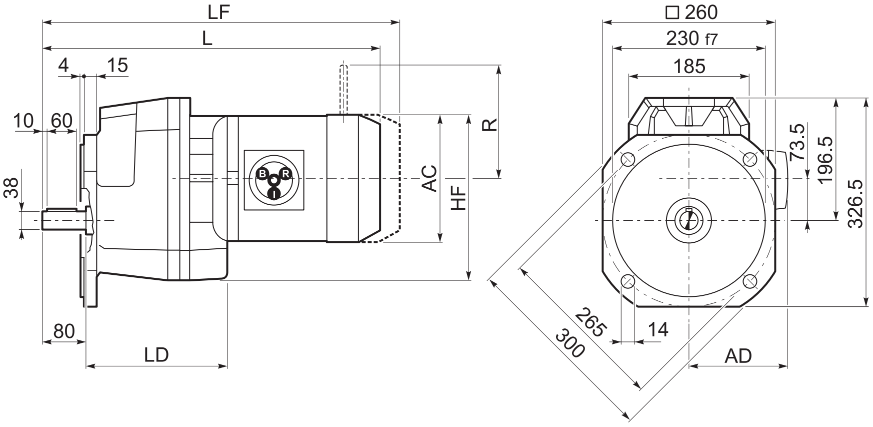
LF
L
4
15
10
60
38
80
LD
AC
HF
R
□ 260
230 f7
185
73.5
196.5
326.5
265
300
14
AD

										M...FD M...FA		M...FD		M...FA	
			AC	**H**	**HF**	**L**	**LD**	**AD**	Kg	**LF**	Kg	**R**	**AD**	**R**	**AD**
S 50 1	**S1**	**M1**	137	225	222	469	—	102	40	530	42	103	135	124	108
S 50 1	**S2**	**M2S**	156	233	230	492.5	204.5	111	44	568.5	47	129	146	134	119
S 50 1	**S3**	**M3S**	195	253	250	541.5	219.5	135	51	637.5	56	160	158	160	142
S 50 1	**S3**	**M3L**	195	253	250	573.5	219.5	135	60	664.5	65	160	158	160	142
S 50 1	**S4**	**M4**	258	284	281	681.5	204.5	193	86	790.5	98	226	210	217	193
S 50 1	**S4**	**M4LC**	258	284	281	716.5	204.5	193	94	815.5	106	226	210	217	193
S 50 1	**S5**	**M5S**	310	310.5	307	768	—	245	114	908	138	266	245	247	245
S 50 1	**S5**	**M5L**	310	310.5	307	812	—	245	130	952	154	266	245	247	245

S 50...P(IEC)

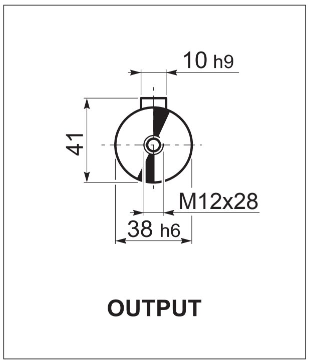
10 h9
41
M12x28
38 h6
OUTPUT

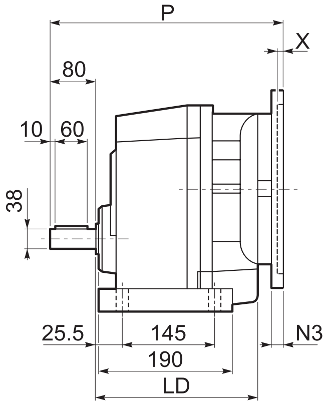
P
X
80
10
60
38
25.5
145
190
LD
N3

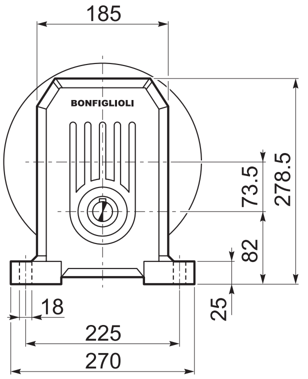
185
BONFIGLIOLI
73.5
278.5
82
25
18
225
270

P

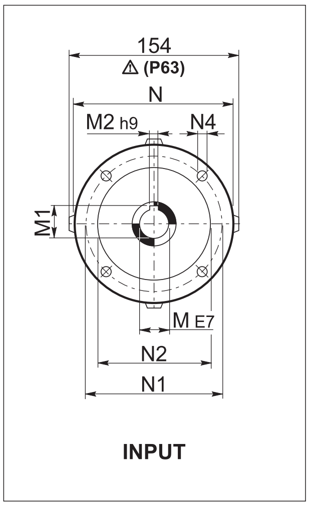
154
⚠ (P63)
N
M2 h9
N4
M1
M E7
N2
N1
INPUT

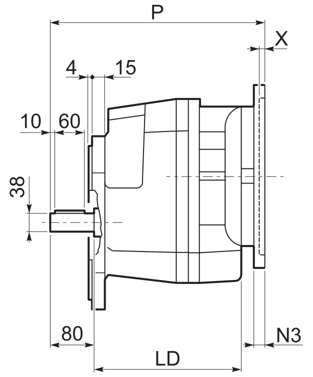
P
X
4
15
10
60
38
80
LD
N3

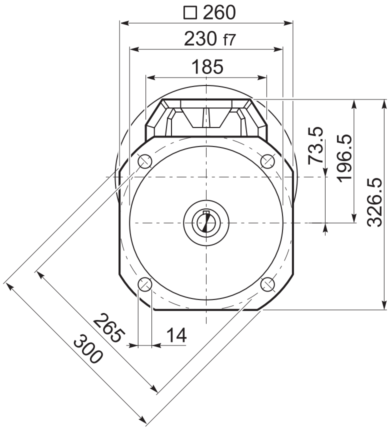
□ 260
230 f7
185
73.5
196.5
326.5
265
300
14

F

		LD	M	M1	M2	N	N1	N2	N3	N4	P	X	Kg
S 50 1	**P63**	204.5	11	12.8	4	140	115	95	—	M8x10	314	4	35
S 50 1	**P71**	204.5	14	12.8	4	160	130	110	—	M8x10	314	4.5	35
S 50 1	**P80**	219.5	19	16.3	5	200	165	130	—	M10x14.5	314	4	37
S 50 1	**P90**	219.5	24	21.8	6	200	165	130	—	M10x14.5	334	4	37
S 50 1	**P100**	204.5	28	27.3	8	250	215	180	—	M12x16	344	4.5	41
S 50 1	**P112**	204.5	28	31.3	8	250	215	180	—	M12x16	344	4.5	41
S 50 1	**P132**	204.5	38	41.3	10	300	265	230	16	14	380	5	44
S 50 1	**P160**	—	42	45.3	12	350	300	250	23	18	431	5.5	48
S 50 1	**P180**	—	48	51.8	14	350	300	250	23	18	431	5.5	48

S 50...HS

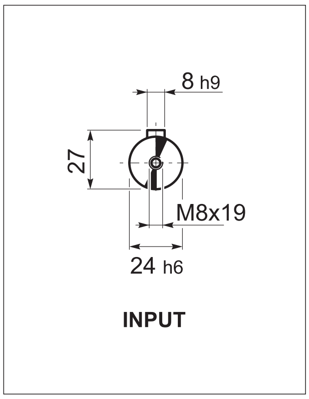
8 h9
27
M8x19
24 h6
INPUT

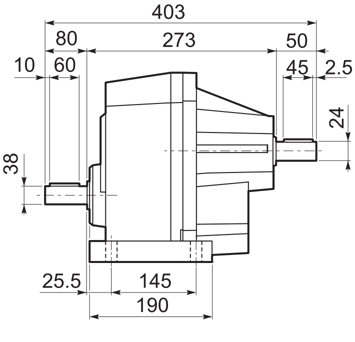
403
80
273
50
10
60
45
2.5
24
38
25.5
145
190

P

Kg	36

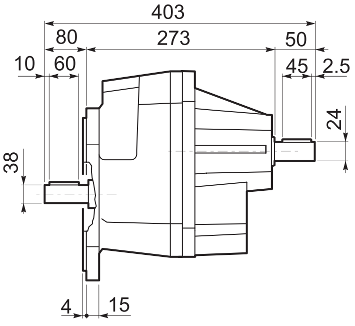
403
80
273
50
10
60
45
2.5
24
38
4
15

F

Kg	39

ELEKTROMOTOREN

M1 SYMBOLE UND MAßEINHEITEN

Symbole	Meßeinh.	Beschreibung
$\cos\varphi$	–	Leistungsfaktor
η	–	Wirkungsgrad
f_m	–	Leistungsfaktorkorrektur
I	–	Relative Einschaltdauer
I_N	[A]	Nennstrom
I_S	[A]	Kurzschlussstrom
J_C	[Kgm^2]	Massenträgheitsmoment der Last
J_M	[Kgm^2]	Massenträgheitsmoment
K_c	–	Drehmomentfaktor
K_d	–	Lastfaktor
K_J	–	Trägheitsmomentfaktor
M_A	[Nm]	Mittleres Beschleunigungsmoment
M_B	[Nm]	Bremsmoment
M_N	[Nm]	Nennmoment
M_L	[Nm]	Mittleres Gegenmoment
M_S	[Nm]	Startmoment

Symbole	Meßeinh.	Beschreibung
n	[min^{-1}]	Nenndrehzahl
P_B	[W]	Leistungsaufnahme der Bremse bei 20°C
P_n	[kW]	Nennleistung
P_r	[kW]	Benötigte Leistung
t_1	[ms]	Ansprechzeit Bremse mit Einweg-Gleichrichter
t_{1s}	[ms]	Ansprechzeit Bremse mit elektronisch gesteuertem Gleichrichter
t_2	[ms]	Einfallzeit Bremse bei Unterbrechung der Stromversorgung WS
t_{2c}	[ms]	Einfallzeit Bremse bei Unterbrechung der Stromversorgung WS und GS
t_a	[°C]	Umgebungstemperatur
t_f	[min]	Betriebsdauer bei gleicher Belastung
t_r	[min]	Aussetzzeit
W	[J]	Bremsenergieaufnahme zwischen zwei Nachstellungen
W_{max}	[J]	Max. Bremsarbeit pro Bremsvorgang
Z	[1/h]	Schalthäufigkeit unter Last
Z_0	[1/h]	Max. Schalthäufigkeit im Leerlauf (relative Einschaltdauer I = 50%)

M2 ALLGEMEINE EIGENSCHAFTEN

M2.1 Produktprogramm

Die Dreiphasen-Asynchronmotoren aus dem Produktprogramm von BONFIGLIOLI RIDUTTORI gibt es in den Grundbauformen IMB5 und deren Ableitungen.
Im vorliegenden Katalog sind außerdem die technischen Eigenschaften der Motoren in Kompaktausführung aufgeführt.

M2.2 Normen

Die in diesem Katalog beschriebenen Motoren sind in Übereinstimmung mit den in der folgenden Tabelle angegebenen einschlägigen Normen und Vereinheitlichungsrichtlinien konstruiert worden.

(F 1)

Titel	CEI	IEC
Allgemeine Vorschriften für drehende elektrische Maschinen	**CEI EN 60034-1**	**IEC 60034-1**
Anschlussbezeichnungen und Drehrichtung von drehenden elektrischen Maschinen	**CEI 2-8**	**IEC 60034-8**
Verfahren zur Kühlung von elektrischen Maschinen	**CEI EN 60034-6**	**IEC 60034-6**
Standardisierte Abmessungen und Leistungen von drehenden elektrischen Maschinen	**EN 50347**	**IEC 60072**
Klassifizierung der Schutzart von drehenden elektrischen Maschinen	**CEI EN 60034-5**	**IEC 60034-5**
Geräuschgrenzwerte	**CEI EN 60034-9**	**IEC 60034-9**
Kennzeichnung der Bauformen, Aufstellung und Klemmkastenlage	**CEI EN 60034-7**	**IEC 60034-7**
IEC Normspannungen	**CEI 8-6**	**IEC 60038**
Mechanische Schwingungen (Verfahren und Grenzwerte) für elektrischen Maschinen	**CEI EN 60034-14**	**IEC 60034-14**

Die Motoren entsprechen außerdem den an die IEC-Norm 60034-1 angepassten ausländischen Normen, die in der folgenden Tabelle genannt werden.

(F 2)

DIN VDE 0530	Deutschland
BS5000 / BS4999	Großbritannien
AS 1359	Australien
NBNC 51 - 101	Belgien
NEK - IEC 34	Norwegen
NF C 51	Frankreich
OEVE M 10	Österreich
SEV 3009	Schweiz
NEN 3173	Niederlande
SS 426 01 01	Schweden

M2.3 Motoren für die USA und Kanada

CUS

CUS option is available in NEMA Design C execution for BN motors, and NEMA Design B for BX motors, with regards to the electrical features. Motors are certified in compliance with CSA (Canadian Standard) C22.2 N° 100 and UL (Underwriters Laboratory) UL 1004-1 standards, as stated on UL file E308649.
BN motors nameplates show the below marks:

NOTE:
Starting from **June, 1st 2016**, CUS motors whose efficiency is below IE3 (i.e. “Premium Efficiency”) cannot be any longer sold in the USA and Canada, unless one or more of the following conditions apply:

- Double speed motors;
- Motors plated for a non - continuous duty (<80%);
- Motors intended to be operated through variable frequency drive only (properly equipped with “Inverter Duty Only” label, or similar).

Die CUS-Option ist für die Fremdlüftermotoren nicht anwendbar.
Die Spannungen der amerikanischen Verteilernetze und die entsprechenden Nennspannungen, die bei der Bestellung der Motore angegeben werden müssen, können der folgenden Tabelle entnommen werden:

(F 3)

Frequenz	Netzspannung	V_{mot}
60 Hz	208 V	**200 V**
	240 V	**230 V**
	480 V	**460 V**
	600 V	**575 V**

CUS Option steht nur bei 50 HZ Betrieb zur Verfügung (Ausgeschlossen BX Motoren).

Motoren mit dem Spannungsverhältnis 2 (z.B. 230/460V-60Hz; 220/440V-60Hz) haben standardmäßig ein 9-poliges Klemmbrett. Bei vergleichbaren Ausführungen entspricht die Nennleistung der des 50 Hz Motors. Das gilt ebenso für 575 V - 60 Hz Motoren. Für Bremsmotoren mit Gleichstrombremse vom Typ FD erfolgt die Versorgung des Gleichrichters über das Motorklemmbrett mit einer Spannung von 230 V (einphasiger Wechselstrom). Bei Bremsmotoren stellt sich die Versorgung der Bremse wie folgt dar:

(F 4)

BN_FD **M_FD**
Vom Motorklemmenkasten 1~230V W.S.

BN_FA **M_FA**		Bitte angeben
Fremdversorgung	230V Δ	230SA
Fremdversorgung	460V Y	460SA

M2.4 China Compulsory Certification

CCC

Die für den Vertrieb in der Volksrepublik China vorgesehenen Elektromotoren fallen unter den Geltungsbereich des Zertifizierungssystems CCC (China Compulsory Certification). Die Motoren der Serie BN mit Nenndrehmoment bis 7 Nm sind mit CCC-Zertifikation und Sondertypenschild mit der unten dargestellten Kennzichnung erhältlich:

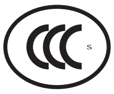

CCC Option ist nicht für Motoren mit Fremdlüftung verfügbar.

M2.5 Richtlinien 2006/95/EG (LVD) und 2004/108/EG (EMC)

Die Motoren der Serie BN und M entsprechen den Anforderungen der Richtlinien 2006/95/EG (Richtlinie - Niederspannung) und 2004/108/EG (Richtlinie - elektromagnetische Kompatibilität) und sind mit dem CE-Zeichen ausgestattet. Im Hinblick auf die Richtlinie EMC entspricht die Konstruktion den Normen CEI EN 60034-1, EN 61000-6-2, EN 61000-6-4.
Die Motoren mit dem Bremsentyp FD fallen, falls mit dem entsprechenden Entstörfilter am Eingang des Gleichrichters ausgestattet (Option **CF**), unter die Emissionsgrenzwerte, die von der Norm EN 61000-6-3:2007 “Elektromagnetische Kompatibilität - Allgemeine Norm für Emissionen - Teil 6-3: Wohngebiete, Handels- und Leichtindustriezonen” vorgesehen werden. Die Motoren entsprechen darüber hinaus den von der Norm CEI EN 60204-1 “Elektrische Maschinenausstattung” gegebenen Vorschriften.
Es liegt in der Verantwortung des Herstellers oder der Montagefirma der Ausrüstung, in der die Motoren als Komponenten montiert werden, die Sicherheit und die Übereinstimmung mit den Richtlinien des Endprodukts zu gewährleisten.

M2.6 Toleranzen

Die Normen lassen die in der nachfolgenden Tabelle genannten Toleranzen für die angegeben Nennwerte zu:

(F 5)

-0.15 (1 - η) P ≤ 50kW	Wirkungsgrad
-(1 - cosφ)/6 min 0.02 max 0.07	Leistungsfaktor
±20% *	Schlupf
+20%	Strom bei blockiertem Läufer
-15% +25%	Drehmoment bei blockiertem Läufer
-10%	Max. Drehmoment

* ± 30% für Motoren mit Pn < 1 kW

M3 MECHANISCHE EIGENSCHAFTEN

M3.1 Bauformen

Die Motoren der Serie BN weisen die in der Abbildung (F6) angegebene Bauform gemäß den Normen CEI EN 60034-14 auf.

Die Bauformen sind:

IM B5 (Grundmodell)
IM V1, IM V3 (Ableitungen)

Die Motoren in der Bauform IM B5 können auch in den Einbaulagen IM V1 und IM V3 eingesetzt werden; in diesen Fällen ist auf dem Leistungsschild des Motors die Bauform IM B5 angegeben.
Bei Bauformen mit vertikaler Lage des Motors und nach unten gerichteter Welle wird die Ausführung mit Schutzdach empfohlen (bei Bremsmotoren stets vorzusehen). Diese Option muß zum Bestellzeitpunkt angegeben werden, da sie in der Grundausführung nicht berücksichtigt ist.

(F 6)

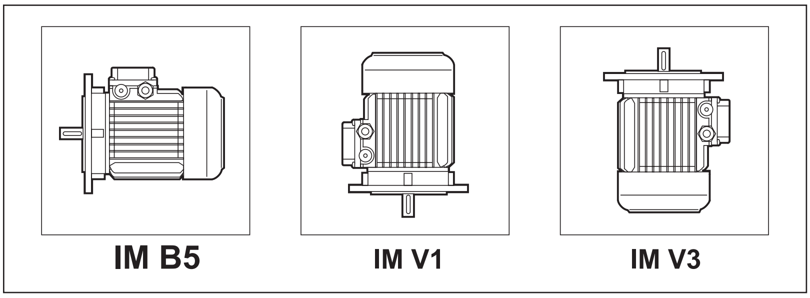

Die Motoren mit Flansch können mit reduzierten Wellen und Flanschmaßen geliefert werden in der nachstehen den Tabelle - Ausführung **B5R**. Die Nutzung des Motors in Kombination mit einem Getriebe muss in Übereinstimmung mit der max. installierbaren Leistung des jeweiligen Getriebes erfolgen, siehe dazu Kapitel “Anbaumöglichkeiten”. Im Fall dass die Kombination nicht zusammen passt, nehmen Sie bitte Kontakt mit dem Technischen Service von Bonfiglioli auf.

(F 7)

	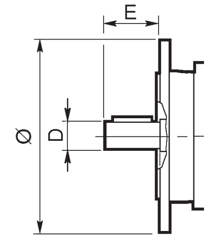					
	BN 71	**BN 80**	**BN 90**	**BN 100**	**BN 112**	**BN 132**
	DxE - Ø					
B5R (1)	11x23 - 140	14x30 - 160	19x40 - 200	24x50 - 200	24x50 - 200	28x60 - 250

(1) Flansch mit durchgehenden Bohrungen

M3.2 Schutzart

IP..

In der nachstehenden Tabelle werden die jeweiligs zur Verfügung stehenden Schutzarten zusammengefasst.
Unabhängig von der spezifischen Schutzart müssen die im Freien installierten Motoren vor direkter Sonneneinstrahlung geschützt werden. Im Fall einer senkrechten Montage mit Wellenende nach unten, sollte darüber hinaus das Schutzdach bestellt werden, das vor dem Eindringen von Wasser und festen Fremdkörpern schützt (Option **RC**).

(F 8)

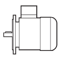	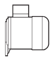	IP 54	IP 55	IP 56
BN	**M**	⛔	standard	🪙 auf Anfrage
BN_FD **BN_FA**	**M_FD** **M_FA**	standard	🪙 auf Anfrage	⛔

M3.3 Kühlung

Die Motoren werden mittels Eigenbelüftung gekühlt (IC 411 gemäss CEI EN 60034-6) und sind mit einem Radiallüfterrad aus Kunststoff ausgestattet, welches in beiden Drehrichtungen wirksam ist.
Bei der Installation muß sichergestellt werden, dass die Lüfterradabdeckung soweit vom nächsten Bauteil entfernt ist, daß der Lufteintritt nicht behindert wird und dass der Motor und (falls vorhanden) die Bremse problemlos gewartet werden können.
Die Motoren können auf Anfrage mit einem unabhängig gespeisten Fremdlüfter geliefert werden (Option U1). Diese Ausführung sollte eingesetzt werden, falls der Motor über einen Frequenzumrichter bei kleinen Drehzahlen oder bei hoher Schalthäufigkeit betrieben wird.

M3.4 Drehrichtung

Der Betrieb in beiden Drehrichtungen ist möglich.
Schließt man die Klemmen U1, V1, W1 an die Phasen L1, L2, L3 an, dreht sich der Motor, mit Sicht auf die Motorwelle, im Uhrzeigersinn. Eine Drehung im Gegenuhrzeigersinn erhält man, indem man zwei Phasen tauscht.

M3.5 Geräuschpegel

Der Geräuschpegel wurde entsprechend der in der Norm ISO 1680 angegeben Methode gemessen und liegt innerhalb der zulässigen Grenzwerte der Norm CEI EN 60034-9.

M3.6 Auswuchtung und Schwingstärke

Die Motoren werden dynamisch mit einer halben Passfeder ausgewuchtet und entsprechen dem Schwingstärkegrad A der Norm CEI EN 60034-14.
Wird eine besonders hohe Laufruhe gefordert, steht eine Ausführung mit reduziertem Schwingverhalten nach Grad B zur Verfügung. Die folgende Tabelle gibt die Werte der effektiven Schwinggeschwindigkeit für das normale Auswuchten (A) und im Grad B an.

(F 9)

Schwingstärkegrad	Bemessungsdrehzahl n [min^{-1}]	Grenzwerte der Schwinggeschwindigkeit [mm/s] **BN 56 ≤ H ≤ BN 200** **M05 ≤ H ≤ M5**
A	600 < n < 3600	1.6
B	600 < n < 3600	0.70

Diese Werte beziehen sich auf einen frei hängenden und sich im Leerlauf befindlichen Motor.

M3.7 Motorklemmkasten

Der Klemmkasten hat ein 6-poliges Klemmbrett für einen Anschluss über Kabelschuhe (Ausführung 9-poliges für US-Spannung “Dual Voltage”). Im Klemmkastens ist ein Erdungsanschluss für den Anschluss des Schutzleiters vorgesehen. Die Abmessungen der Anschlüsse werden in der nachstehenden Tabelle angegeben.
Für Informationen über die Bremsversorgung verweisen wir an dieser Stelle auf den Par. M6 (Bremstyp FD), M7 (Bremstyp FA).
Bei den Bremsmotoren befindet sich der Gleichrichter mit den erforderlichen Anschlussklemmen für die Stromversorgung der Bremse innerhalb des Klemmkastens.
Die elektrischen Anschlüsse müssen entsprechend den Schaltplänen, die sich im Inneren der Klemmkästen befinden, vorgenommen werden oder anhand der Angaben in den Betriebsanleitungen.

(F 10)

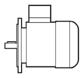	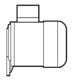	Anzahl Klemmen	Gewinde	Max. Leiterquerschnitt mm^2
BN 56 ... BN 71	**M05, M1**	6	M4	2.5
BN 80, BN 90	**M2**	6	M4	2.5
BN 100 ... BN 112	**M3**	6	M5	6
BN 132 ... BN 160MR	**M4**	6	M5	6
BN 160M ... BN 180M	**M5**	6	M6	16
BN 180L ... BN 200L	**–**	6	M8	25
BN 63 ... BN 160MR	**M05 ... M4**	9	M4	6
BN 160M ... BN 200L	**M5**	9	M6	16

M3.8 Kabeleingang

Unter Berücksichtigung der Norm EN 50262 verfügen die Kabeleingänge in die Klemmkästen über metrische Gewinde, deren Maße, der nachstehenden Tabelle entnommen werden können.

(F 11)

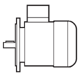	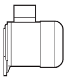	Kabeldurchführung	Max. zulässiger Kabeldurchmesser [mm]
BN 63	**M05**	2 x M20 x 1.5	13
BN 71	**M1**	2 x M25 x 1.5	17
BN 80 - BN 90	**M2**	2 x M25 x 1.5	17
BN 100	**M3**	2 x M32 x 1.5	21
		2 x M25 x 1.5	17
BN 112	**—**	2 x M32 x 1.5	21
		2 x M25 x 1.5	17
BN 132...BN 160MR	**M4**	4 x M32 x 1.5	21
BN 160M...BN 200L	**M5**	2 x M40 x 1.5	28

M3.9 Lager

Bei den Lagern handelt es sich um Radialkugellager mit Dauerschmierung.
Die verwendeten Typen sind in der nachfolgenden Tabelle angegeben.
Die Lebensdauer L10h der Lager, ohne Einfluss externer Kräfte, beträgt mehr als 40.000 Stunden (Berechnung gemäß ISO 281).
DE = Wellenseite **NDE** = Lüfterseite

(F 12)

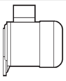	**DE**	**NDE**	
	M, M_FD, M_FA	**M**	**M_FD, M_FA**
M05	6004 2Z C3	6201 2Z C3	6201 2RS C3
M1	6004 2Z C3	6202 2Z C3	6202 2RS C3
M2	6007 2Z C3	6204 2Z C3	6204 2RS C3
M3	6207 2Z C3	6206 2Z C3	6206 2RS C3
M4	6309 2Z C3	6308 2Z C3	6308 2RS C3
M5	6309 2Z C3	6309 2Z C3	6309 2RS C3

(F 13)

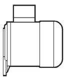	**DE**	**NDE**	
	BN	**BN**	**BN_FD** **BN_FA**
BN 56	6201 2Z C3	6201 2Z C3	–
BN 63	6201 2Z C3	6201 2Z C3	6201 2RS C3
BN 71	6202 2Z C3	6202 2Z C3	6202 2RS C3
BN 80	6204 2Z C3	6204 2Z C3	6204 2RS C3
BN 90	6205 2Z C3	6205 2Z C3	6305 2RS C3
BN 100	6206 2Z C3	6206 2Z C3	6206 2RS C3
BN 112	6306 2Z C3	6306 2Z C3	6306 2RS C3
BN 132	6308 2Z C3	6308 2Z C3	6308 2RS C3
BN 160MR	6309 2Z C3	6308 2Z C3	6308 2RS C3
BN 160M/L	6309 2Z C3	6309 2Z C3	6309 2RS C3
BN 180M	6310 2Z C3	6309 2Z C3	6309 2RS C3
BN 180L	6310 2Z C3	6310 2Z C3	6310 2RS C3
BN 200L	6312 2Z C3	6310 2Z C3	6310 2RS C3

M4 ELEKTRISCHE EIGENSCHAFTEN

M4.1 Spannung

Die einpoligen Motoren sind in der Standardausführung für eine Nennspannung von 230/400V Δ/Y oder 400/690V Δ/Y 50 Hz mit einer Spannungstoleranz ± 10%, bezogen auf die Typenschildangabe, ausgelegt. Für alle BN und M Motoren, deren Spannungs-/Frequenzangabe nicht in der nachfolgenden Übersicht enthalten ist, gelten reduzierte Spannungstoleranzen von ± 5%.
Bei einem Betrieb an den Toleranzgrenzen kann die Temperatur die vorgesehene Isolationsklasse um 10 K überschreiten. Diese Motoren eignen sich für einen
Betrieb im Europäischen Versorgungsnetz mit einer Spannung, die den in der Veröffentlichung IEC 60038 angegebenen Werten entspricht.

(F 14)

	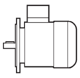	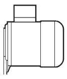	V_{mot} ± 10 % 3 ~	**Ausführung**
IE1	**BN 56 … BN 132**	**M0 … M4**	230 / 400 V - Δ/Y - 50 Hz	Standard
			400 / 690 V - Δ/Y - 50 Hz	Auf Anfrage, ohne Aufpreis
			460 V Y - 60 Hz	Standard
	BN 160 … 200	**M5**	400 / 690 V - Δ/Y - 50 Hz	Standard
			460 V Δ - 60 Hz	Standard

[1] nur 4polige Motoren

Die polumschaltbaren Motoren sind für die Standardversorgung von 50 Hz ausgelegt. Es gelten die Toleranzen gemäß CEI EN 60034-1, wie für die eintourigen Motoren mit 400 V / 50 Hz.

In der nachfolgenden Tabelle werden die verschiedenen Wicklungsanschlüsse in Abhängigkeit von den jeweiligen Polzahlen angegeben.

(F 15)

Polzahl	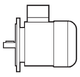	**Wicklungsanschluß**
2	**BN 63 … BN 200**	Δ / Y (2)
4	**BN 56 … BN 200**	
6	**BN 63 … BN 200**	
8	**BN 71 … BN 132**	
2/4	**BN 63 … BN 132**	Δ / YY (Dahlander)
2/6	**BN 71 … BN 132**	Y / Y (zwei Wicklungen)
2/8	**BN 71 … BN 132**	
2/12	**BN 80 … BN 132**	
4/6	**BN 71 … BN 132**	
4/8	**BN 80 … BN 132**	Δ / YY (Dahlander)

(2) Motoren mit dem Spannungsverhältnis 2 (z. B. 230/460V - 60Hz) werden mit einem 9-poligen Klemmbrett in ΔΔ/Δ oder YY/Y - Schaltung gefertigt (Ausnahme 6-polig BN 63 Δ/Y)

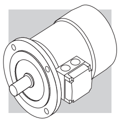

M4.2 Frequenz

Die Leistungsangabe auf dem Typenschild BN / M von 60 Hz Motoren entspricht den Daten aus der folgenden Tabelle:

(F 16)

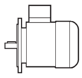	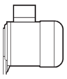	P_n [kW]			
		2P	**4P**	**6P**	**8P (*)**
BN 56A	**–**	–	0.07	–	–
BN 56B	**M0B**	–	0.1	–	–
BN 63A	**M05A**	0.21	0.14	0.1	–
BN 63B	**M05B**	0.3	0.21	0.14	–
BN 63C	**M05C**	0.45	0.3	–	–
BN 71A	**–**	0.45	0.3	0.21	0.1
–	**M1SC**	–	–	0.21	–
BN 71B	**M05SD**	0.65	0.45	0.3	0.14
BN 71C	**M1LA**	0.9	0.65	0.45	–
BN 80A	**–**	0.9	0.65	0.45	0.21
BN 80B	**M2SA**	1.3	0.9	0.65	0.30
BN 80C	**M2SB**	1.8	1.3	0.9	–
BN 90S	**–**	–	1.3	0.9	0.45
BN 90SA		1.8	–	–	–
BN 90SB		2.2	–	–	–
BN 90L	**M3SA**	2.5	–	1.3	0.65
BN 90LA		–	1.8	–	–
BN 90LB	**–**	–	2.2	–	–

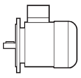	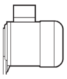	P_n [kW]			
		2P	**4P**	**6P**	**8P (*)**
BN 100L	**M3LA**	3.5	–	–	–
BN 100LA		–	2.5	1.8	0.9
BN 100LB	**M3LB**	4.7	3.5	2.2	1.3
BN 112M	**–**	4.7	4.7	2.5	1.8
–	**M3LC**	–	4.7	2.5	–
BN 132S	**M4SA**	–	6.5	3.5	2.5
BN 132SA		6.5	–	–	–
BN 132SB	**M4SB**	8.7	–	–	–
BN 132M	**M4LA**	11	–	–	3.5
BN 132MA		–	8.7	4.6	–
BN 132MB	**M4LB**	–	11	6.5	–
BN 160MR	**M4LC**	12.5	12.5	–	–
BN 160M	**M5SA**	–	–	8.6	–
BN 160MB	**–**	17.5	–	–	–
–	**M5SB**	17.5	17.5	–	–
BN 160L	**–**	21.5	17.5	12.6	–
–	**M5SC**	21.5	–	–	–
BN 180M	**M5LA**	24.5	21.5	–	–
BN 180L	**–**	–	25.3	17.5	–
BN 200L	**–**	–	34	–	–
BN 200LA	**–**	34	–	22	–

(*) Ausgeschlossen M_ Motoren

Bei polumschaltbare BN / M Motoren, die bei 60 Hz betrieben werden, kommt es zur Erhöhung der Nennleistung in Bezug auf die 50 Hz Werte um ca. 15%.
Wenn die Nenndaten für 60 Hz Betrieb, vergleichbar mit den Nenndaten bei 50 Hz, auf dem Motortypenschild aufgeführt werden sollen, dann kann die Option PN gewählt werden.
Die Motoren sind normalerweise für den Betrieb bei 50 Hz ausgelegt, können aber auch unter Berücksichtigung der folgenden Tabelle bei 60 Hz betrieben werden.
Die Motoren, die für 50 Hz Betriebe betimmt sind, zeigen auf das Namenschild auch die Werte
für 60 Hz Betriebe (außer Motoren mit CUS Ausführung und Bremsmotoren). Siehe nachfolgende Tabelle.

(F 17)

50 Hz	**60 Hz**			
V - 50 Hz	**V** - 60 Hz	**Pn** - 60 Hz	$\mathbf{M_n}$, $\mathbf{M_a/M_n}$ - 60 Hz	**n** [min^{-1}] - 60 Hz
230/400 Δ/Y	220 - 240 Δ	1	0.83	1.2
	380 - 415 Y			
400/690 Δ/Y	380 - 415 Δ			
230/400 Δ/Y	265 - 280 Δ	1.15	1	1.2
	440 - 480 Y			
400/690 Δ/Y	440 - 480 Δ			

M4.3 Umgebungstemperatur

Die im Katalog enthaltenen Tabellen geben die technischen Daten bei einer Frequenz von 50 Hz und normalen Umgebungsbedingungen gemäß den Normen CEI EN 60034-1 an (Temperatur 40 °C und Höhe <1000 m ü. d. M.). Die Motoren können bei höheren Temperaturen zwischen 40 °C und 60 °C betrieben werden, wenn man die in der nachfolgenden Tabelle angegebenen Reduktionsangaben berücksichtigt.

(F 18)

Umgebungstemperatur (°C)	40°	45°	50°	55°	60°
Zulässige Leistung in % der Nennleistung	100%	95%	90%	85%	80%

Bei Reduktionsfaktoren höher als 15 %, bitten wir um Rücksprache.

M4.4 Isolationsklasse

CL F

Die Motoren von Bonfiglioli sind serienmäßig mit Isolierstoffen (Emaildraht, Isolierstoffen, Imprägnierharzen) der Klasse **F** ausgestattet.

CL H

Auf Anfrage können sie auch in der Klasse **H** geliefert werden.
Allgemein bleiben die Motoren in der Standardausführung innerhalb des Grenzwertes von 80K, der einer Übertemperatur der Klasse B entspricht.
Die sorgfältige Auswahl der Komponenten des Isoliersystem gestatten den Einsatz dieser Motoren auch unter tropischen Klimabedingungen und bei Vorliegen normaler Vibrationen.
Für den Einsatz in in der Nähe aggressiv wirkender chemischer Substanzen oder bei hoher Luftfeuchtigkeit wird empfohlen, sich zur Wahl eines passendes Produktes mit unserem Technischen Kundendienst in Verbindung zu setzen.
Nicht verfügbar für die mit den CSA- und UL-Normen konformen Motoren (CUS-Option).

(F 19)

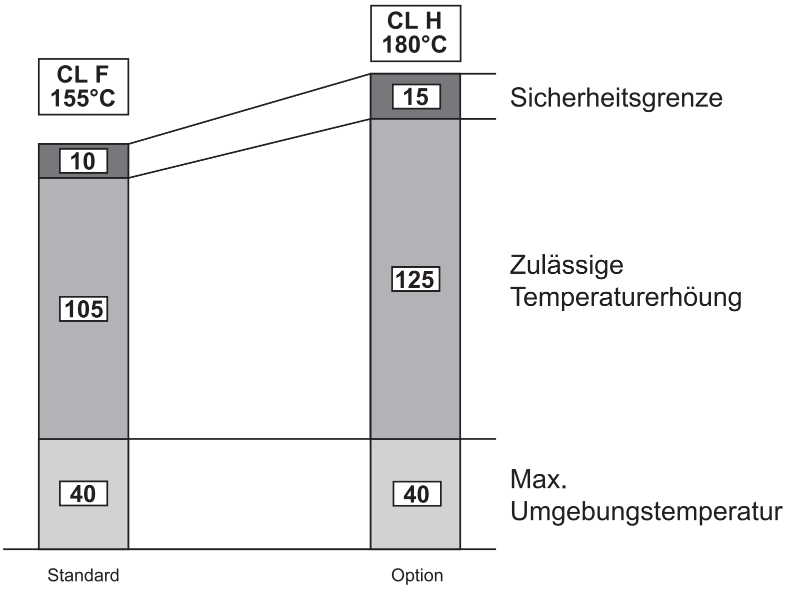

M4.5 Betriebsart

Sofern nicht anderweitig angegeben, beziehen sich die im Katalog angegebene Motorleistungen auf den Dauerbetrieb S1. Bei Motoren, die unter Bedingungen eingesetzt werden, die nicht mit S1 übereinstimmen, muss die entsprechende Betriebsart unter Bezugnahme auf die Normen CEI EN 60034-1 festgelegt werden. Insbesondere kann man, für die Betriebsarten S2 und S3, durch Anwendung der in der nachstehenden Tabelle angeführten Koeffizienten der für den Dauerbetrieb vorgesehenen Leistung gegenüber eine Leistungssteigerung erzielen. Diese Tabelle gilt für einpolige Motoren.
Alternativ zum Dauerbetrieb S1 kann in der Konfigurationsphase des Produkts eine der folgenden Betriebsarten gewählt werden: S2, S3 oder S9. Auf dem Typenschild des Motors werden die erhöhte Leistung entsprechend der Betriebsart, die diesbezüglichen elektrischen Daten und als Betriebsart entweder S2-30min, S3-70% oder S9 angegeben.
Für weitere Details bitte den technischen Kundendienst von Bonfiglioli kontaktieren.
Für die polumschaltbaren Motoren sollte man sich im Hinblick auf den Leistungssteigerung, mit unserem Technischen Kundendienst in Verbindung setzen.

(F 20)

	Betriebsart						
	S2			**S3 ***			**S4 - S9**
	Zyklusdauer (min)			Relative Einschaltdauer (I)			Rückfrage
	10	**30 (*)**	**60**	**25%**	**40%**	**70% (*)**	
f_m	1.35	1.15	1.05	1.25	1.15	1.1	

* Die Zyklusdauer muß in jedem Fall kleiner oder gleich 10 Minuten sein. Wenn sie darüber liegt, bitte Rücksprache mit unserem Technischen Kundendienst.
(*) Standardwert der Optionen

M4.5.1 Relative Einschaltdauer:

$$I = \frac{t_f}{t_f + t_r} \cdot 100 \qquad (23)$$

t_f = Betriebszeit mit konstanter Last
t_r = Aussetzzeit

M4.5.2 Kurzzeitbetrieb S2

Betrieb mit konstanter Last für eine begrenzte Zeit, die unter der Zeit liegt, die zum Erreichen des thermischen Beharrungszustands benötigt wird, gefolgt von einer Pause, die so lang ist, dass der Motor nahezu wieder auf die Umgebungstemperatur abkühlen kann.

M4.5.3 Aussetzbetrieb S3:

Betrieb mit aufeinanderfolgenden, identischen Betriebszyklen, die alle einen Zeitraum mit konstanter Belastung und einer Pause beinhalten.
Bei dieser Betriebsart beeinflusst der Anlaufstrom die Übertemperatur nicht merklich.

M4.6 Frequenzumrichterbetrieb

Die Elektromotoren der Serie BN und M können über PWM Frequenzumrichter bis 500 V Nennspannung am Umrichtereingang versorgt werden. Bei den Serienmotoren wird ein Phasenisolierungsystem mittels Wicklungstrenner, Emaildraht der Klasse 2 und Imprägnierharze der Klasse H eingesetzt (widerstandsfähig bei Spannungsimpulsen bis 1600 V Spitze-Spitze und Anstiegszeiten t_s > 0.1µs an den Motorklemmen). Die typischen Merkmale von Drehmoment/Geschwindigkeit im Betrieb S1 für Motoren mit einer Grundfrequenz f_b = 50 Hz werden in der folgenden Tabelle angegeben. Bei Betriebsfrequenzen unter ungefähr 30 Hz müssen die eigenbelüftenden Standardmotoren (IC411) aufgrund der in diesem Fall abnehmenden Kühlung entsprechend drehmomentreduziert oder, alternativ, fremdbelüftet betrieben werden. Bei über der Grundfrequenz liegenden Drehzahlen arbeitet der Motor nach Erreichen des max. Spannungswerts am Umrichterausgang in einem Feldschwächebereich mit konstanter Leistung mit einem reduziertem Drehmoment, welches ungefähr im Verhältnis (f/f_b) abnimmt. Da das Kippmoment des Motors ungefähr mit dem Faktor $(f/f_b)^2$ abnimmt, muss auch der zulässige Überlastungsgrenzwert entsprechend reduziert werden.

(F 21)

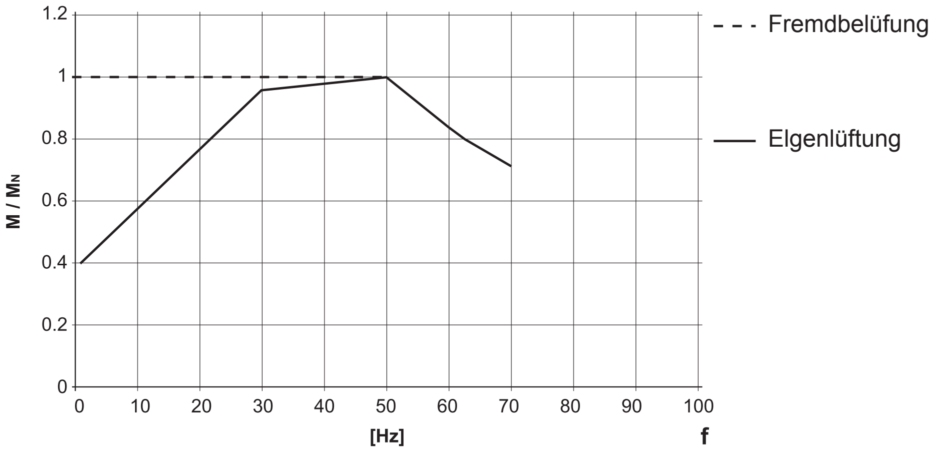

Der folgenden Tabelle gibt die mechanischen Drehzahlgrenzen oberhalb der Nennfrequenz an:

(F 22)

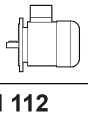	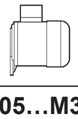	**n** [min^{-1}]		
		2p	**4p**	**6p**
≤ BN 112	**M05…M3**	5200	4000	3000
≥ BN 132	**M4, M5**	4500	4000	3000

Bei Drehzahlen oberhalb der Nennwerte, treten stärkere mechanische Schwingungen und höhere Lüftergeräusche auf. Bei diesen Anwendungen wird ein Auswuchten des Rotors im Grad B und eventuell der Einsatz eines Fremdlüfters empfohlen.

Der Fremdlüfter und, falls vorhanden, die elektromagnetische Bremse müssen immer direkt über das Netz gespeist werden.

M4.7 Maximale Schaltungshäufigkeit Z

In den Datentabellen der Motoren ist für den jeweiligen Bremsentyp die maximale Schaltungshäufigkeit im Leerlauf Z0 bei relativer Einschaltdauer I = 50% angegeben. Dieser Wert definiert die maximale Anzahl von Anläufen im Leerlauf pro Stunde, ohne dass die maximal zulässige Wicklungstemperatur der Isolierstoffklasse F überschritten wird.
Wenn in der realen Anwendung beispielsweise ein Motor eine Last mit dem Massenträgheitsmoment J_c mit einem mittleren Anlauf-Lastmoment M_L antreibt und dabei die Leistung P_r benötigt, kann die max. zulässige Schalthäufigkeit mit folgender Formel überschlägig berechnet werden:

$$\boxed{Z = \frac{Z_0 \cdot K_c \cdot K_d}{K_J}} \quad (24)$$

wobei gilt:

$K_J = \frac{J_m + J_c}{J_m}$	Trägheitsfaktor
$K_c = \frac{M_a - M_L}{M_a}$	Drehmomentsfaktor
$K_d =$	Lastfaktor siehe den folgenden Tabelle

(F 23)

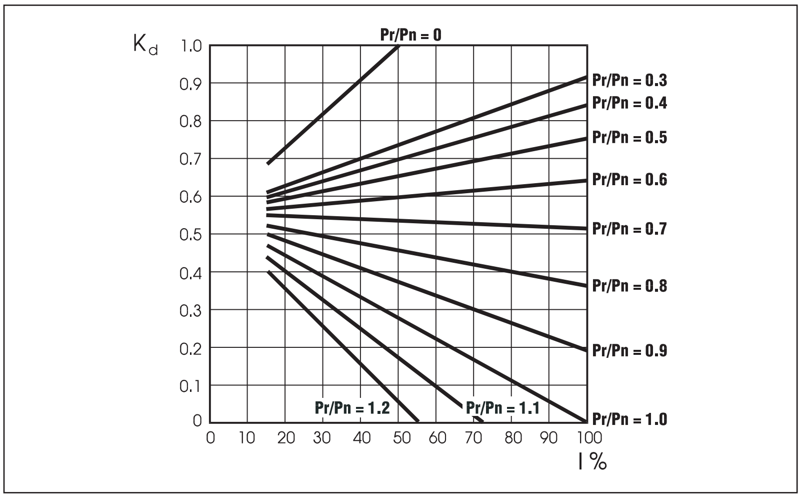

Auf Grundlage der berechneten Schaltspiele muss anschließend anhand der Tabellen (F30), (F38) überprüft werden, ob die geforderte Bremsarbeit die Wärmegrenzleistung der Bremse W_{max} nicht überschreitet.

M5.1 Betriebsweise

Die Bremsmotoren sind mit Federdruckbremsen ausgestattet, die mit Gleichstrom (Typ FD) oder mit Drehstrom (Typ FA) gespeist werden.
Alle Bremsen arbeiten gemäß dem sicheren Ruhestromprinzip, d.h. sie fallen bei Stromausfall über Federdruck ein.

(F 24)

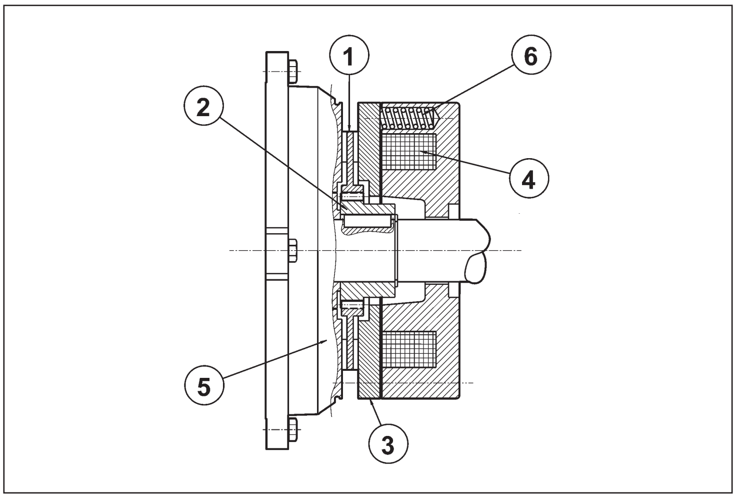

Zeichenerklärung:
① Bremsscheibe
② Nabe
③ Beweglicher Anker
④ Ringspule
⑤ Motorschild
⑥ Sprungfedern

Wenn die Spannungsversorgung unterbrochen wird, schieben Druckfedern den beweglichen Anker gegen die Bremsscheibe. Die Bremsscheibe wird zwischen der Ankerfläche und dem Motorschild gepresst und blockiert damit den Rotor. Wird die Spule erregt, wird der Anker durch das Magnetfeld gegen die Federkraft bewegt und die Bremsscheibe und damit auch der Rotor werden wieder frei gegeben.

M5.2 Allgemeine Eigenschaften

- Hohe und einstellbare Bremsmomente (allgemein $M_b \approx 2 M_n$).
- Bremsscheibe mit Stahlkern und doppeltem Bremsbelag (Material mit geringem Verschleiß, asbestfrei).
- Sechskant hinten an der Motorwelle, auf Lüfterradseite (N.D.E.), für eine manuelle.
- Drehung des Rotors mit einem Inbusschlüssel (nicht lieferbar, wenn die Optionen PS, RC, TC, U1, U2, EN1, EN2, EN3, EN4, EN5, EN6) bestellt werden.
- Manuell zu betätigende, mechanische Bremslüftvorrichtung (Optionen **R** und **RM** für BN/M_FD; Optionen **R** für BN/M_FA).
- Korrionsschutzbehandlung an allen Flächen der Bremse.
- Isolierstoffklasse in Klasse F.

M6 DREHSTROMBREMSMOTOREN MIT GLEICHTROMBREMSE: TYP BN_FD und M_FD

Baugrößen: BN 63 … BN 200L / M05 ... M5

(F 25)

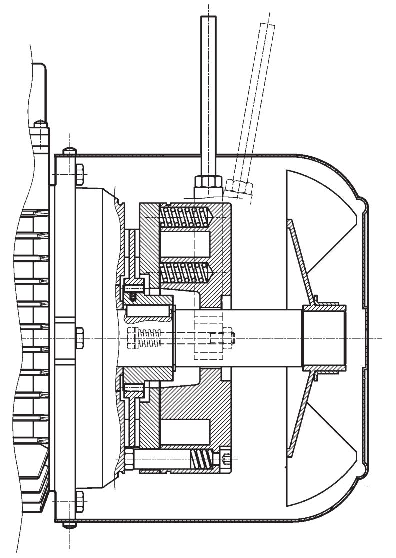

IP 54

(F 26)

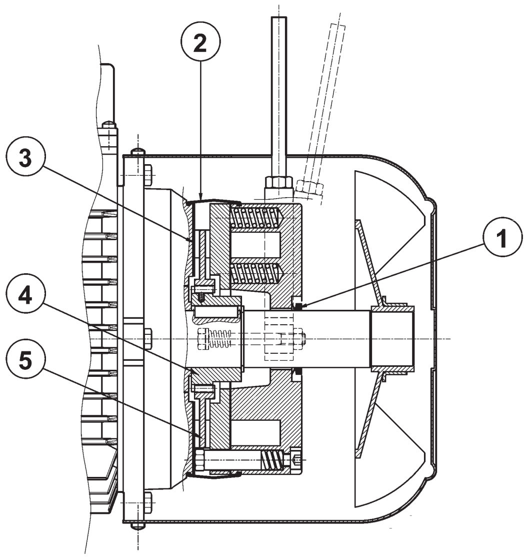

IP 55

Elektromagnetische Bremse mit Ringwicklungsspule für **Gleichstromspannung**, die mittels Schrauben am hinteren Motorschild befestigt ist. Die Federn sorgen für die axiale Ausrichtung des Magnetkörpers. Die Bremsscheibe gleitet auf der Mitnehmernabe aus Stahl; die Nabe ist an der Welle aufgezogen und mit Schwingungsdämpfung versehen. Die Motoren werden vom Hersteller auf das in der Tabelle der technischen Daten angegebenen Bremsmoment eingestellt. Das Bremsmoment kann durch das Ändern des Typs und/oder der Anzahl der Federn eingestellt werden. Auf Anfrage können die Motoren mit einem Bremslüfthebel für die manuelle Lüftung der Bremse mit selbsttätiger Rückstellung (**R**) ohne Arretierung oder mit arretierbarem Lüfthebel (**RM**) geliefert werden. Die Festlegung der möglichen Positionen des Bremslüfthebels in Abhängigkeit von der Klemmkastenlage erfolgt durch die Optionsbeschreibung im Abschnitt “BREMSLÜFTHEBEL”.
Die Bremse vom Typ FD garantiert hohe dynamische Leistungen und niedrige Laufgeräusche. Die Ansprecheigenschaften der Bremse unter Gleichstrom können je nach Bedarfsfall durch den Einsatz der verschiedenen verfügbaren Gleichrichter oder durch einen entsprechenden Bremsenanschluss optimiert werden.
Für Anwendungen, bei denen Hubvorgänge und/oder hohe Werte stündlich anfallender Arbeit vorgesehen sind, bitte den technischen Kunden-/Vertriebsdienst kontaktieren.

M6.1 Schutzart

Die Standardausführung ist Schutzart IP54 vor. Optional kann der Bremsmotor vom Typ FD in der Schutzart **IP55** geliefert werden, wobei sind folgende Komponenten eingesetzt werden:

① V-Ring an der Motorwelle N.D.E.
② staub- und wasserdichte Gummischutz
③ Ring aus rostfreiem Stahl zwischen Motorschild und Bremsscheibe
④ Mitnehmernabe aus rostfreiem Stahl
⑤ Bremsscheibe aus rostfreiem Stahl

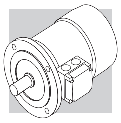

M6.2 Spannungsversorgung der Bremse FD

Die Versorgung der Gleichstrombremsspule erfolgt über einen Gleichrichter im Klemmkasten, der, falls nichts anderes angegeben ist, werkseitig mit der Bremsspule verdrahtet ist.
Bei den einpoligen Motoren ist serienmäßig der Anschluss des Gleichrichters an das Motorklemmbrett vorgesehen. Unabhängig von der Netzfrequenz erfolgt die Versorgung des Gleichrichters VB über die in der nachstehenden Tabelle angegebenen Standardspannungen:

(F 27)

2, 4, 6 P					**1 speed**
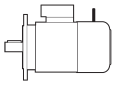	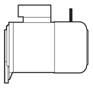	**BN_FD / M_FD** V_{mot} ± 10% 3 ~	V_B ± 10% 1 ~	Bremsenversorgung über die Motorspannung	Separate Versorgung
BN 63…BN 132	**M05...M4LB**	230/400 V – 50 Hz	230 V	standard	V_B **SA** oder V_B **SD** angeben
BN 160…BN 200	**M4LC...M5**	400/690 V – 50 Hz	400 V	standard	V_B **SA** oder V_B **SD** angeben

Die polumschaltbaren Motoren müssen immer mit separater Bremsenversorgungsspannung betrieben werden, deshalb erfolgt die Lieferung standardmäßig ohne Anschluss der Bremse an das Motorklemmbrett. Die Versorgungsspannung des Gleichrichters V_B wird in der nachstehenden Tabelle angegeben:

(F 28)

2/4, 2/6, 2/8, 2/12, 4/6, 4/8 P					**2 speed**
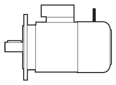	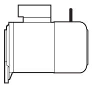	**BN_FD / M_FD** V_{mot} ± 10% 3 ~	V_B ± 10% 1 ~	Bremsenversorgung über die Motorspannung	Separate Versorgung
BN 63…BN 132	**M05...M4LB**	400 V – 50 Hz	230 V	⛔	V_B **SA** oder V_B **SD** angeben

Bei dem Gleichrichter handelt es sich um einen Typ mit Einwegschaltung (VDC ≈ 0,45 VAC). Er ist in den Versionen **NB**, **SB**, **NBR** und **SBR**, gemäß den Details in der nachstehenden Tabelle, verfügbar:

(F 29)

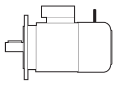	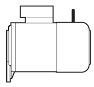	Bremse	 **standard**	**auf Anfrage**
BN 63	**M05**	**FD 02**	**NB** 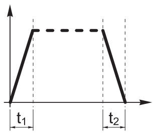	**SB** 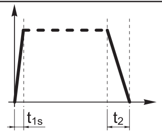 **SBR** 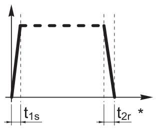 **NBR** 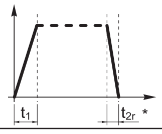
BN 71	**M1**	**FD 03** **FD 53**		
BN 80	**M2**	**FD 04**		
BN 90S	**—**	**FD 14**		
BN 90L	**—**	**FD 05**		
BN 100	**M3**	**FD 15**		
—		**FD 55**	**SB** 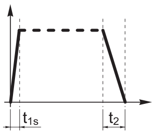	**SBR** 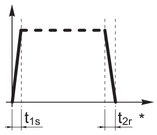
BN 112	**—**	**FD 06S**		
BN 132 - BN 160MR	**M4**	**FD 56** **FD 06** **FD 07**		
BN 160L - BN 180M	**M5**	**FD 08**		
BN 180L - BN 200M	**—**	**FD 09**		

(*) $t_{2c} < t_{2r} < t_2$

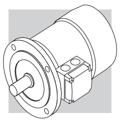

Der Gleichrichter **SB** mit elektronischer Kontrolle der Erregung reduziert die Bremslüftzeiten, indem er die Bremsspule im Einschaltmoment übermäßig stark erregt, um dann, nach erfolgtem Lüftvorgang, in die normale Gleichrichterschaltung umzuschalten.

Der Einsatz des Gleichrichtertyps **SB** wird bei folgenden Einsatzfällen empfohlen:
- hohe Schalthäufigkeit
- kurze Bremslüftzeiten
- starke thermische Beanspruchung der Bremse

Für die Anwendungen mit schnellen Bremsenreaktionszeiten (Öffnungszeit der Bremse) , können auf Anfrage die Gleichrichter **NBR** oder **SBR** geliefert werden.
Diese Gleichrichter erweitern die Funktion der Typen **NB** und **SB**, indem bei Spannungsunterbrechung ein elektronischer Schaltkreis einen Kontakt öffnet und dadurch die Magnetspule schnell entregt wird. Diese Lösung ermöglicht eine Verkürzung der Bremsansprechzeiten ohne zusätzlichen Schaltungsaufwand. Bestmögliche Performance wird bei den Gleichrichtern **NBR** und **SBR** mit einer separaten Versorgungsspannung erreicht.
Verfügbare Spannungen: 230VAC ±10%, 400VAC ± 10%, 50/60 Hz (mit Gleichrichter); 100VDC ±10%, 180VDC ± 10% (mit Option SD).

M6.3 Technische Daten - Bremsentyp FD

In der nachstehenden Tabelle werden die technischen Daten der Gleichstrombremsen vom Typ FD angegeben.

(F 30)

Bremse	**Bremsmoment M_b** [Nm] **feder**			**Ansprechzeit**		**Bremsvorgang**		**W_{max} pro Bremsvorgang** [J]			**W**	**P**
				t_1	**$t_{1\,s}$**	**t_2**	**t_{2c}**					
	6	**4**	**2**	[ms]	[ms]	[ms]	[ms]	**10 s/h**	**100 s/h**	**1000 s/h**	[MJ]	[W]
FD02	–	3.5	1.75	30	15	80	9	4500	1400	180	15	17
FD03	5	3.5	1.75	50	20	100	12	7000	1900	230	25	24
FD53	7.5	5	2.5	60	30	100	12					
FD04	15	10	5	80	35	140	15	10000	3100	350	30	33
FD14												
FD05	40	26	13	130	65	170	20	18000	4500	500	50	45
FD15	40	26	13	130	65	170	20					
FD55	55	37	18	–	65	170	20					
FD06S	60	40	20	–	80	220	25	20000	4800	550	70	55
FD56	–	75	37	–	90	250	20	29000	7400	800	80	65
FD06		100	50		100	250	20					
FD07	150	100	50	–	120	200	25	40000	9300	1000	130	65
FD08*	250	200	170	–	140	350	30	60000	14000	1500	230	100
FD09**	400	300	200	–	200	450	40	70000	15000	1700	230	120

* erreichte Bremsmomentwerte, die durch den Einsatz von jeweils 9, 7, 6 Federn erreicht werden

** Werte, der durch den Einsatz von jeweils 12, 9, 6 Federn erreichten Bremsmomente

t_1 = Ansprechzeit der Bremse mit Einweggleichrichter
t_{1s} = Ansprechzeit der Bremse mit elektronisch gesteuertem Gleichrichter
t_2 = Bremsverzögerung mit Unterbrechung auf Wechselstromseite und Fremdversorgung
t_{2c} = Bremsverzögerung mit Unterbrechung auf Wechselstrom- und Gleichstromseite – Die in der Tab. (F30) angegebenen Werte t_1, t_{1s}, t_2, t_{2c} beziehen sich auf eine Bremse mit eingestelltem max. Bremsmoment, mit mittlerem Luftspalt und bei Nennspannung
W_{max} = max. Energie pro Bremsvorgang
W = Bremsenergie zwischen zwei Einstellungen des Luftspalts
P_b = bei 20° C von der Bremse aufgenommene Leistung (50 Hz)
M_b = statisches Bremsmoment (±15%)
s/h = Schaltspiele pro stunde

Der Verschleiß der Reibdichtungen ist von den Betriebsbedingungen abhängig (Temperatur, Feuchtigkeit, Schlupfgeschwindigkeit, spezifischer Druck); die Verschleißangaben sind demnach als Richtwerte zu betrachten.

M6.4 Anschlüsse - Bremsentyp FD

Die einpoligen Motoren werden mit werkseitig an das Motorklemmbrett angeschlossenen Gleichrichtern geliefert. Bei den polumschaltbaren Motoren und bei Bremsen mit separater Versorgung werden die Gleichrichter kundenseitig mit einer auf dem Typenschild angegeben Bremsenspannung VB angeschlossen.
Da es sich bei der Bremsspule um eine induktive Last handelt, müssen gemäß IEC 60947-4-1 für die Ansteuerung der Bremse und die Unterbrechung der Gleichstromseite Kontakte der Kategorie AC-3 verwendet werden.
Tabelle (F31) – Bremsenversorgung über die Motorspannung und netzseitige Unterbrechung. Verzögerter und von den Zeitkonstanten des Motors abhängige Haltezeit t_2. Vorzusehen, wenn möglichst ruckfreie Starts/Stopps gefordert sind.
Tabelle (F32) – Bremsspule mit separater Spannungsversorgung und Unterbrechung der Wechselstromseite. Normale und vom Motor unabhängige Stoppzeiten. Es werden die in der Tabelle (F30) angegebenen Stoppzeiten t_2 realisiert.
Tabelle (F33) – Bremsspule mit Versorgung über die Motorspannung und Unterbrechung der Gleich- und der Motorspannung. Schneller Stopp mit den in der Tabelle (F30) angegebenen Ansprechzeiten t_{2c}.
Tabelle (F34) – Bremsspule mit separater Spannungsversorgung und Unterbrechung der Gleich- und der Wechselstromseite.
Reduzierte Stoppzeiten mit den in der Tabelle (F30) angegebenen Werten t_{2c}.

Die Bremsspannungsversorgung über die Motorspannung (von Tab. F31 bis Tab. F34) darf nur erfolgen wenn die Nennspannung der Bremse der geringeren Nennspannung des Motors entspricht.

(F 31)

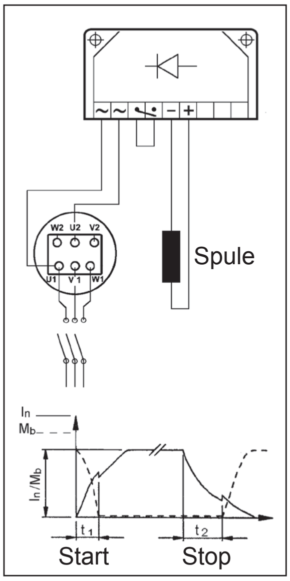

(F 32)

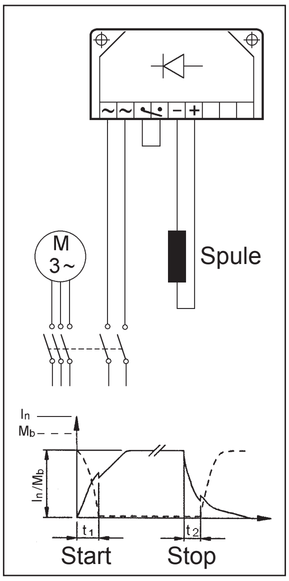

(F 33)

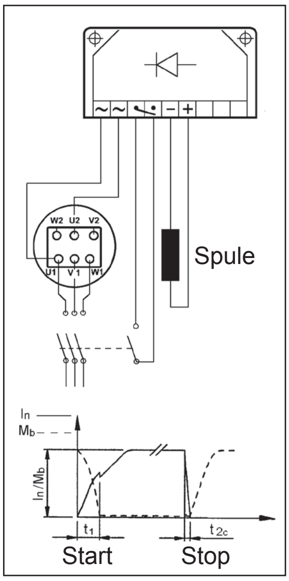

(F 34)

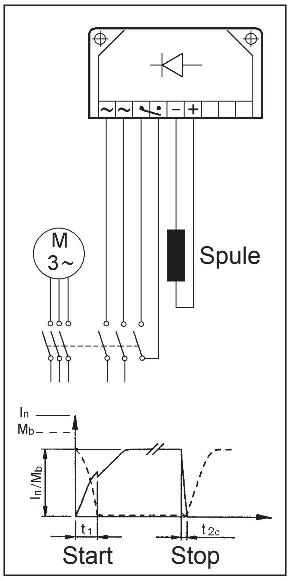

M7 DREHSTROMBREMSMOTOREN MIT DREHSTROMBREMSE: TYP BN_FA und M_FA

Baugrößen: BN 63 … BN 180M / M05 ... M5

(F 35)

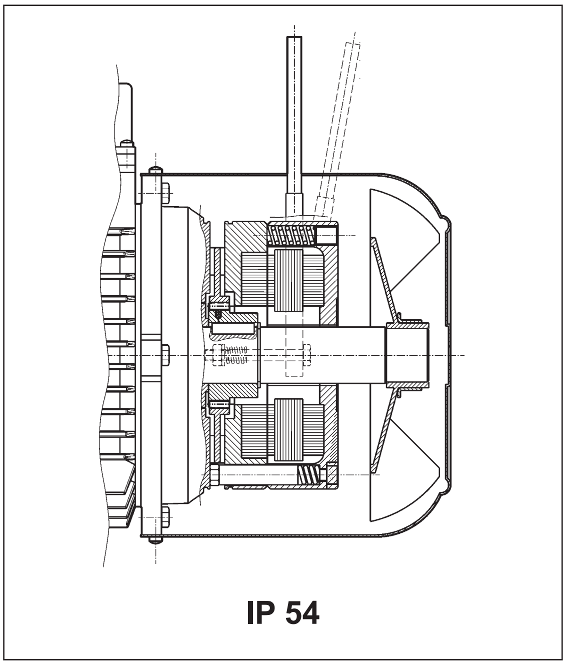

(F 36)

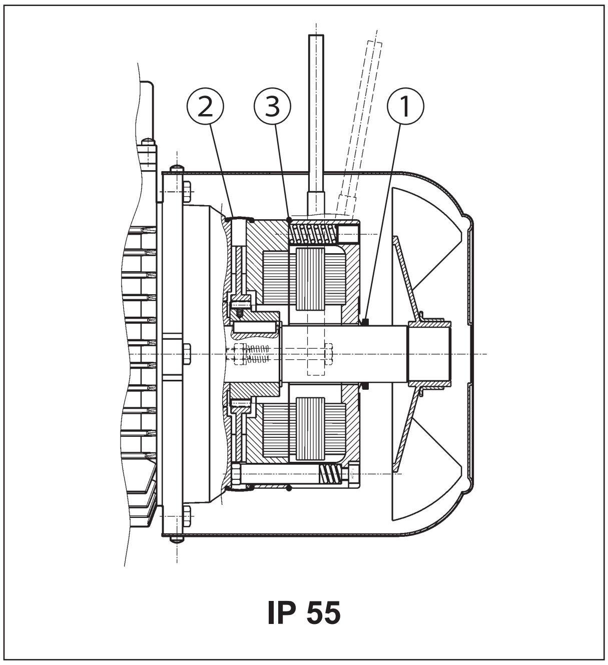

Elektomagnetische Bremse mit **Drehstromversorgung**, die mittels Schrauben am hinteren Motorschild befestigt ist. Die Federn sorgen dabei für die axiale Ausrichtung des Magnetkörpers.
Die Bremsscheibe (Stahl) gleitet axial auf dem sich auf dem Rotor befindlichen Mitnehmer, der über eine Paßfeder mit Motorwelle verbunden und mit Schwingungsdämpfung ist as Bremsmoment wird auf das entsprechende Motormoment eingestellt (siehe Tabelle der technischen Daten der entsprechenden Motoren). Das Bremsmoment ist stufenlos über die Schrauben der Federvorspannung einstellbar. Der Einstellbereich beträgt 30% $M_{bMAX} < M_b < M_{bMAX}$ (M_{bMAX} steht für das in der Tab (F38) angegebene max. Bremsmoment).
Die Bremsen vom Typ FA zeichnen sich durch eine hohe Dynamik aus, weshalb sie für Anwendungen geeignet sind, in denen hohe Schaltfrequenzen und schnelle Ansprechzeiten gefordert werden.
Auf Anfrage können die Motoren mit einem Lüfthebel für die manuelle Lüftung der Bremse mit automatischer Rückstellung (**R**) geliefert werden. Die Festlegung der möglichen Positionen des Bremslüfthebels in Abhängigkeit von der Klemmkastenlage erfolgt durch die Optionsbeschreibung im Abschnitt "BREMSLÜFTHEBEL".
Für Anwendungen, bei denen Hubvorgänge und/oder hohe Werte stündlich anfallender Arbeit vorgesehen sind, bitte den technischen Kunden-/Vertriebsdienst kontaktieren.

M7.1 Schutzart

Die Standardausführung hat Schutzart IP54 vor.
Optional kann der Bremsmotor FA auch in der Schutzart **IP55** geliefert werden, was durch die folgenden zusätzlichen Bauteile erreicht wird:

① V-Ring an der Motorwelle N.D.E.
② staub- und wasserdichte Gummischutz
③ O-ring

M7.2 Spannungsversorgung - Bremsentyp FA

Bei den einpoligen Motoren wird die Versorgung der Bremsspule direkt vom Motorklemmbrett abgenommen, das bedeutet, dass die Spannung der Bremse mit der Motorspannung übereinstimmt. In diesem Fall braucht die Bremsenspannung nicht extra angegeben werden.
Bei polumschaltbaren Motoren und bei separater Versorgungsspannung ist ein Hilfsklemmbrett mit 6 Anschlüssen vorgesehen, die einen Anschluss der Bremse ermöglichen. In beiden Fällen muss die Bremsenspannung in der Bestellung angegeben werden.
In der nachstehenden Tabelle werden für die einpoligen und die polumschaltbaren Motoren die Standardspannungen der Wechselstrombremsen angegeben.

(F 37)

Einpolige Motoren	BN 63…BN 132	BN 160…BN 180
	M05...M4LB	M4LC...M5
	230Δ / 400Y V ±10% – 50 Hz	400Δ/ 690Y V ±10% – 50 Hz
	265Δ / 460Y ±10% - 60 Hz	460Y – 60 Hz

Polumschaltbare Motoren (separate Versorgung)	BN 63…BN 132
	M05...M4
	230Δ / 400Y V ±10% – 50 Hz
	460Y - 60 Hz

Falls nicht anderweitig angegeben, beträgt die Standardversorgung der Bremse 230 V Δ / 400 V Y - 50 Hz.

Auf Anfrage können Sonderspannungen von 24…690 V, 50-60 Hz geliefert werden.

M7.3 Technische Daten der Bremsen vom Typ FA

(F 38)

Bremse	Bremsmoment M_b [Nm]	Ansprechzeit t_1 [ms]	Bremsvorgang t_2 [ms]	W_{max} [J]			W [MJ]	P [VA]
				10 s/h	100 s/h	1000 s/h		
FA 02	3.5	4	20	4500	1400	180	15	60
FA 03	7.5	4	40	7000	1900	230	25	80
FA 04	15	6	60	10000	3100	350	30	110
FA 14								
FA 05	40	8	90	18000	4500	500	50	250
FA 15								
FA 06S	60	16	120	20000	4800	550	70	470
FA 06	75	16	140	29000	7400	800	80	550
FA 07	150	16	180	40000	9300	1000	130	600
FA 08	250	20	200	60000	14000	1500	230	1200

M_b = statisches max. Bremsmoment (±15%)
t_1 = Bremsenansprechzeit
t_2 = Bremsverzögerung
W_{max} = max. Energie pro Bremsvorgang (Wärmeleistung der Bremse)
W = Bremsenergie zwischen zwei Einstellungen des Luftspalts
P_b = bei 20° von der Bremse aufgenommene Leistung (50 Hz)
s/h = Schaltspiele pro Stunde

HINWEIS:
Die in der Tabelle angegebenen Werte t_1 und t_2 beziehen sich auf eine Bremse mit eingestelltem Nenndrehmoment, einen mittleren Luftspalt und mit Standardspannung.

Der Verschleiß der Reibdichtungen ist von den Betriebsbedingungen abhängig (Temperatur, Feuchtigkeit, Schlupfgeschwindigkeit, spezifischer Druck); die Verschleißangaben sind demnach als Richtwerte zu betrachten.

M7.4 Anschlüsse - Bremsentyp FA

Bei den Motoren mit direkter Bremsenspannungsversorgung müssen die Anschlüsse im Klemmkasten entsprechend den Angaben im der folgenden Schema vorgenommen werden:

(F 39)

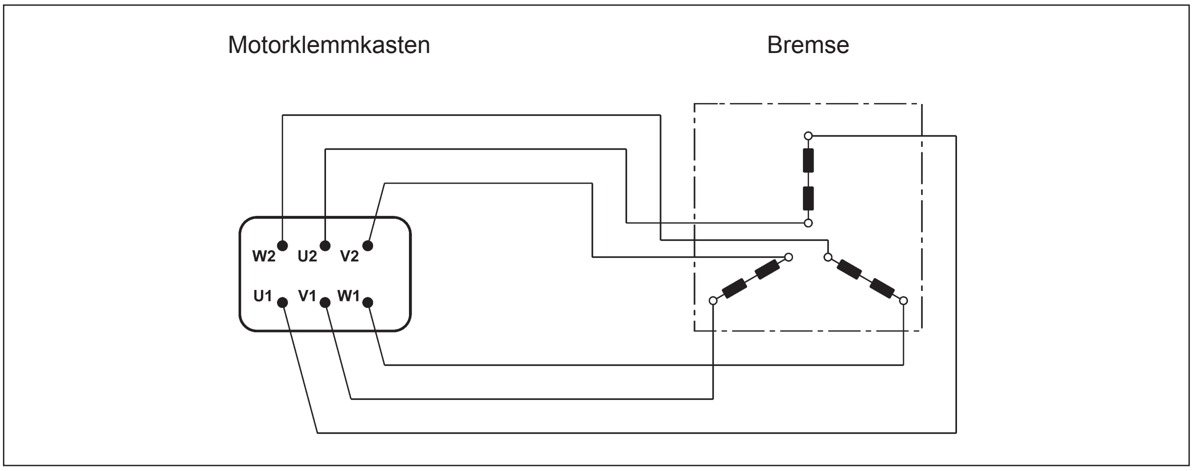
Motorklemmkasten
Bremse
W2
U2
V2
U1
V1
W1

Bei den polumschaltbaren Motoren und, auf Anfrage, auch bei den einpoligen Motoren mit separater Versorgungsspannung ist für den Anschluss der Bremse ein Hilfsklemmbrett mit 6 Anschlüssen vorgesehen. Dann haben die Motoren einen größeren Klemmkasten. Siehe im der folgenden Schema :

(F 40)

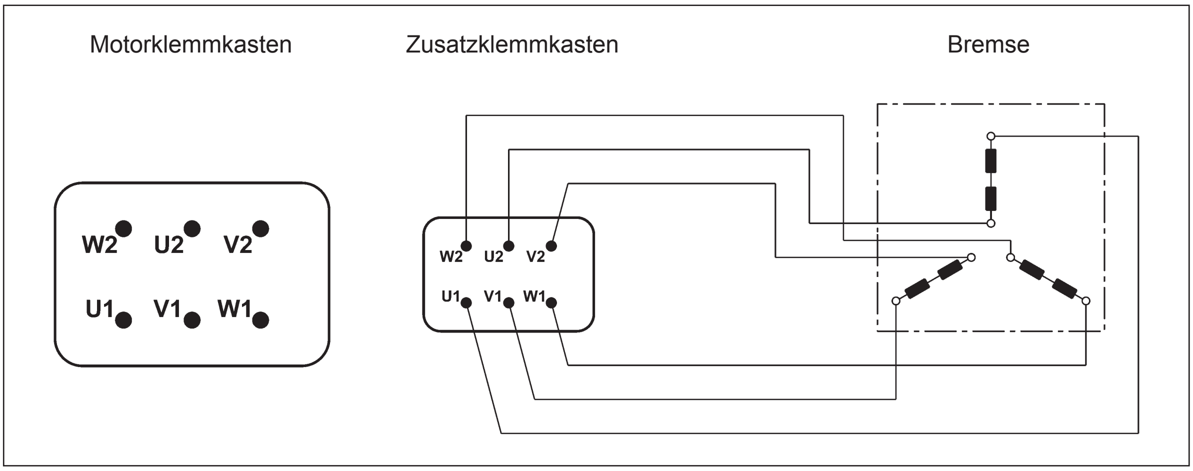
Motorklemmkasten
Zusatzklemmkasten
Bremse
W2
U2
V2
U1
V1
W1
W2
U2
V2
U1
V1
W1

M8 BREMSLÜFTHEBEL

Für Instandhaltungsarbeiten können die Federdruckbremsen vom Typ FD und FA optional mit Bremslüfthebeln geliefert werden, um ein manuelles Lüften zu ermöglichen.

R

(F 41)

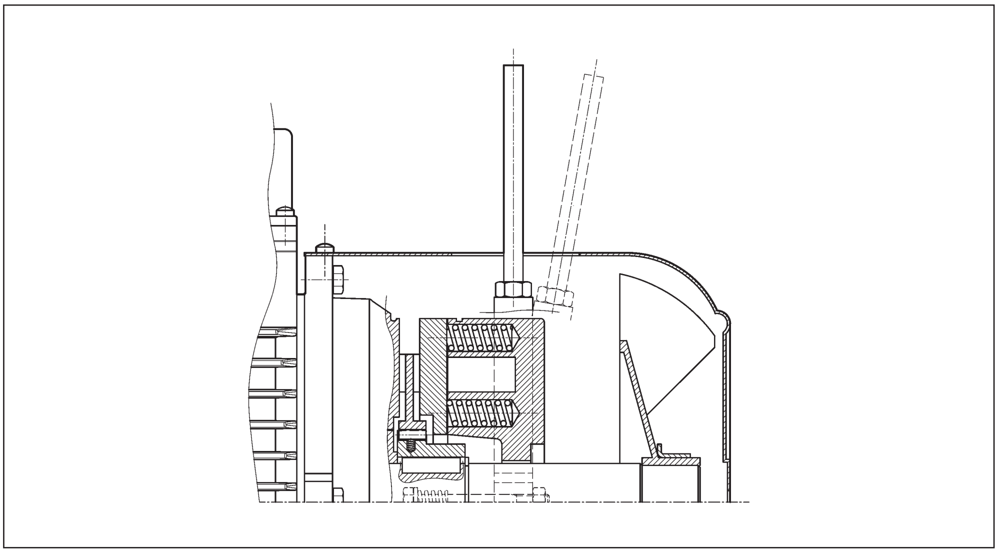

Bremslüfthebel mit automatischer Rückstellung durch Federkraft.

RM

(F 42)

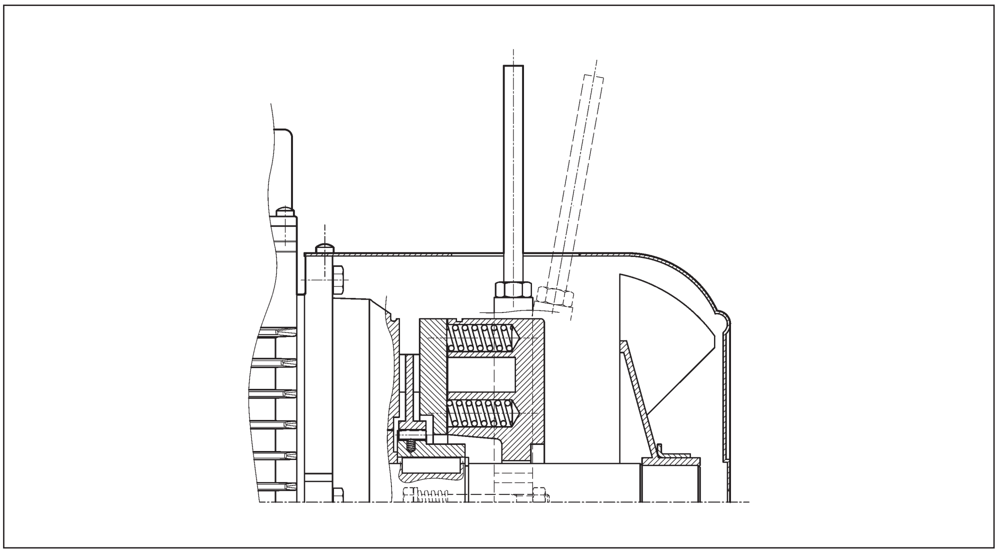

Bei Bremsmotorentyp FD mit der Option RM, kann der Bremslüfterhebel bei Bedarf in der Lüfterposition arretiert werden, wenn man diesen bis zur Bremsenarretierung einschraubt.
Je nach Motortyp sind unterschiedliche Bremslüftsysteme verfügbar, die Sie der folgenden Tabelle entnehmen können:

(F 43)

	R	RM
BN_FD	**BN 63...BN 200**	**2p 63A2 ≤ H ≤ 132M2** **4p 63A4 ≤ H ≤ 132MA4** **6p 63A6 ≤ H ≤ 132MA6**
M_FD	**M 05...M 5**	**M 05...M 4LA**
BN_FA	**BN 63...BN 180M**	⛔
M_FA	**M 05...M 5**	

M8.1 Ausrichtung des Bremslüfthebels

Der Bremslüfthebel wird bei den Optionen **R** und **RM** standardmäßig um 90° im Uhrzeigersinn zur Position des Klemmkastens montiert (Position [**AB**] in der nachfolgenden Zeichnung).
Andere Positionen: **AA** (0° zum Klemmkasten), **AC** (180° zum Klemmkasten) oder **AD** (270° zum Klemmkasten), im Uhrzeigersinn vom Lüfter aus gesehen, können auf Wunsch geliefert werden:

(F 44)

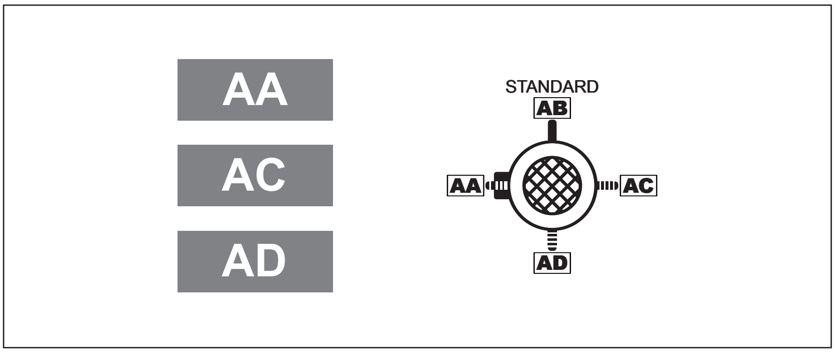

M8.2 Bremse mit separater Spannungsversorgung

...SA

Die Bremsspule wird, unabhaengig vom Motor, durch einen separaten Anschluss gespeist.
In diesem Fall muss Betriebsspannung fuer die spule spezifiziert werden, z.b. 230SA. Die Option ist verfuegbar für alle Motoren mit Bremstyp FD und FA.

...SD

Die Bremsspule wird direkt mit Gleichspannung gespeist. Der Gleichrichter ist NICHT im Lieferumfang enthalten.
Die Betriebsspannung für die Spule muss spezifiziert werden, z.b. 24SD.

M8.3 Daten der Zusatzschwungmassen (F1)

Die folgende Tabelle gibt das Gewicht und das Trägheitsmoment der Zusatzschwungmassen an (Option F1). Die Gesamtabmessungen bleiben unverändert.

(F 45)

Eigenschaften der Schwungräder für Motoren typ: BN_FD, M_FD			
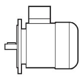	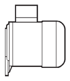	**Gewicht Schwungrad** [Kg]	**Trägheitsmoment Schwungrad** $[Kgm^2]$
BN 63	**M05**	0.69	0.00063
BN 71	**M1**	1.13	0.00135
BN 80	**M2**	1.67	0.00270
BN 90 S - BN 90 L	**–**	2.51	0.00530
BN 100	**M3**	3.48	0.00840
BN 112	**–**	4.82	0.01483
BN 132 S - BN 132 M	**M4**	6.19	0.02580

M9 OPTIONEN

M9.1 Thermische Wicklungsschutzeinrichtungen

Standardmäßig werden Motoren durch externe Motorschutzschalter gegen Überlastung geschützt. Optional können die Motoren mit integrierten Temperaturfühlern ausgestattet werden, die die Wicklung vor Überhitzung aufgrund einer unzureichenden Luftzufuhr oder bei Aussetzbetrieb schützen. Diese Option wird auch für Motoren mit Fremdlüftung dringend empfohlen (IC416).

M9.2 Kapazitiver filter

CF

Nur bei den Bremsmotoren mit vom Typ FD ist die Option eines kapazitiven Filters vorgesehen. Wird dieser Filter vor dem Gleichrichter (Option CF) installiert, fallen die Motoren in die vonder Norm EN61000-6-3:2007” Elektromagnetische Kompatibilität – Allgemeine Normzur Emission – Teil 6-3: Wohngebiete, Handelsund Leichtindustriezonen” vorgesehenen Emissionsgrenzen.

M9.3 PTC-Thermistoren

E3

Hierbei handelt es sich um Halbleiter, die eine schnelle Änderung des Widerstands kurz vor der Nennansprechtemperatur (150 °C) aufweisen.
Der Verlauf der Kennlinie R = f(T) ist durch die DIN-Normen 44081 und IEC 34-11 festgelegt.
Im allgemeinen werden Thermistoren mit positivem Temperaturkoeffizienten verwendet, die unter der Bezeichnung PTC (Kaltleiter) bekannt sind. Die Thermistoren sind nicht in der Lage, die Relais direkt anzusteuern, und müssen deshalb an ein entsprechendes Auslösegerät angeschlossen werden.
Die Anschlüsse der drei in den Wicklungen in Reihe geschalteten PTC-Widerstände sind an einer Zusatzklemmleiste verfügbar.

K1

Es handelt sich hierbei um eine Untergruppe der PTC-Thermistoren; ihre Baueigenschaften ermöglichen den Einsatz als Temperaturfühler, da sie einen positiven Temperaturkoeffizienten in Abhängigkeit vom Widerstand aufweisen.
Die Betriebstemperatur beträgt: 0°C ... +260°C.
Die Thermistoren sind nicht in der Lage, die Relais direkt anzusteuern, und müssen deshalb an ein entsprechendes Auslösegerät angeschlossen werden.
Die Anschlussklemmen (gepolt) von 1 KTY 84-130 sind in einer Hilfsklemmenleiste verfügbar.

M9.4 Bimetall-Temperaturfühler

D3

Diese Schutzeinrichtungen enthalten in einer Kaspel eine Bimetallscheibe, die bei Erreichen der Nennansprechtemperatur (150 °C) einen Schaltkontakt öffnet. Bei abnehmender Temperatur schließt dieser Kontakt wieder. Normalerweise werden die Öffnerkontakte von drei Bimetallfühlern in Reihe geschaltet und auf einer Zusatzklemmleiste zur Verfügung gestellt.

M9.5 Motor mit Verbinder

CON

Es stehen drei Verbindertypen (CON 1, CON 2, CON 3) zur Verfügung, die in zwei Einbaupositionen installiert werden können: rechte Seite des Klemmenkastens (C1D, C2D, C3D); linke Seite des Klemmenkastens (C1S, C2S, C3S).
Die CON-Option ist für die BN und M-Motoren mit einzelner Polarität (2, 4, 6, 8 Pole) in den Größen gemäß nachstehender Tabelle vorgesehen. Alle Versionen mit doppelter Polarität sind davon ausgeschlossen.
Die Verbinder sind für die BN und M-Motoren in der Version ohne Bremse und für die Bremsmotoren mit Gleichstrombremse FD in den Größen gemäß nachstehender Tabelle erhältlich.
Am Motor ist der (Stecker-) Verbinder (mit Stiften) befestigt, während der (Buchsen-) Verbinder nicht zum Lieferumfang zählt.
Mit der CON-Option ist stets der Y-Anschluss der Phasen vorgesehen.
Für die Fremdlüftermotoren (Option U1) ist der Anschluss zur Versorgung des Lüfters im separaten, an der Lüfterabdeckung befestigten Klemmenkasten vorgesehen.
Bei den Motoren mit Encoder (Optionen EN1...EN6) erfolgt der Anschluss des Encoders mit einem losen Kabel, das nicht am Verbinder angeschlossen ist.
Die CON-Option ist für die Motoren mit Wechselstrombremse FA nicht anwendbar.
Die CON-Option ist für optionen U2, CUS, IC nicht kompatibel.

Technische Daten

(F 46)

Option	**CON 1**
Motor-Baugrosse	**BN63…BN112 / M05...M3**
Ansicht des Verbinders	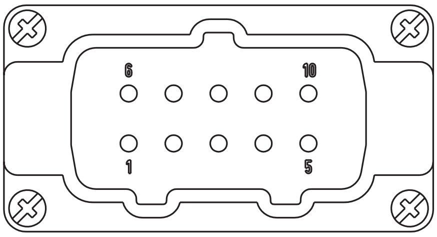
Verbindertyp	Harting Han 10ES
Verbindergehäuse	Han EMC 10B mit 2 Hebeln
Stiftanzahl - Nennstrom	10 x 16A
Versorgungsspannung	500 Vac
Anschlussart der Kontakte	Schraubklemmen

(F 47)

Option	**CON 2**
Motor-Baugrosse	**BN63…BN160MR / M05...M4L**
Ansicht des Verbinders	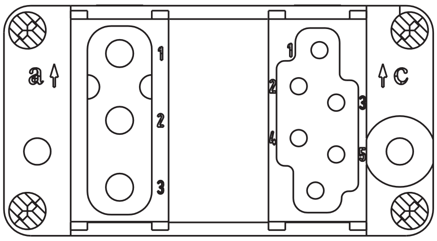
Verbindertyp	Harting Han Modular
Verbindergehäuse	Han EMC 10B mit 2 Hebeln
Modultyp	Modul C + Leeres Modul + Modul E
Stiftanzahl - Nennstrom	3 x 36A / 6 x 16A
Versorgungsspannung	500 Vac
Anschlussart der Kontakte	Crimpkontakte

(F 48)

Option	**CON 3**
Motor-Baugrosse	**BN63…BN160M / M05...M4L**
Ansicht des Verbinders	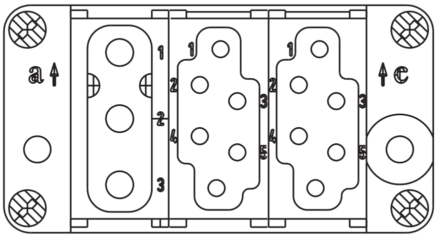 a 1 2 3 1 2 3 4 5 1 2 3 4 5 c
Verbindertyp	Harting Han Modular
Verbindergehäuse	Han EMC 10B mit 2 Hebeln
Modultyp	Modul C + Modul E + Modul E
Stiftanzahl - Nennstrom	3 x 36A / 6 + 6 x 16A
Versorgungsspannung	500 Vac
Anschlussart der Kontakte	Crimpkontakte

(F 49)

Ausrichtung der Verbinder

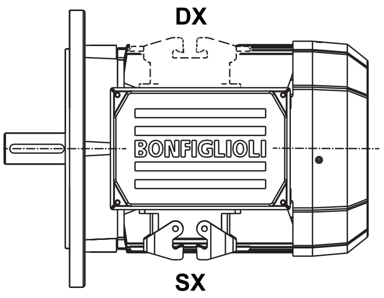

(F 50)

Abmessungen der Motoren ohne Bremse

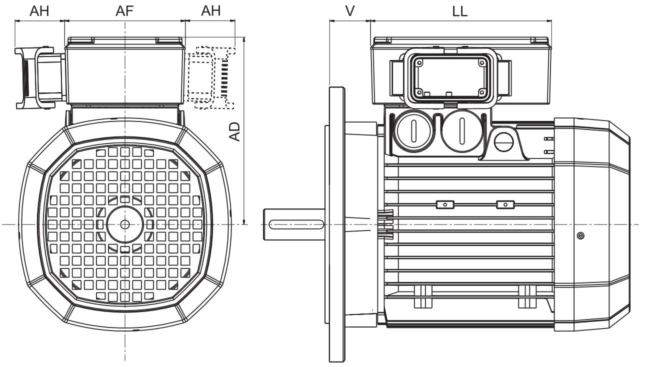

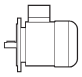	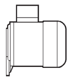	**AD** (mm)	**AF** (mm)	**AH** (mm)	**LL** (mm)	**V**(*) (mm)
BN63	**M05**	136	110	45	165	4.5
BN71	**M1**	149	110	45	165	15.5
BN80	**M2**	160	110	45	165	16.5
BN90	**—**	162	110	45	165	31.5
BN100	**M3**	171	110	45	165	37.5
BN112	**—**	186	110	45	165	39
BN132	**M4**	210	140	45	188	45.5
BN160MR	**—**	210	140	45	188	161

(*) Dimension gilt nur für Motoren BN.

(F 51)

Abmessungen der Motoren mit FD-Bremse

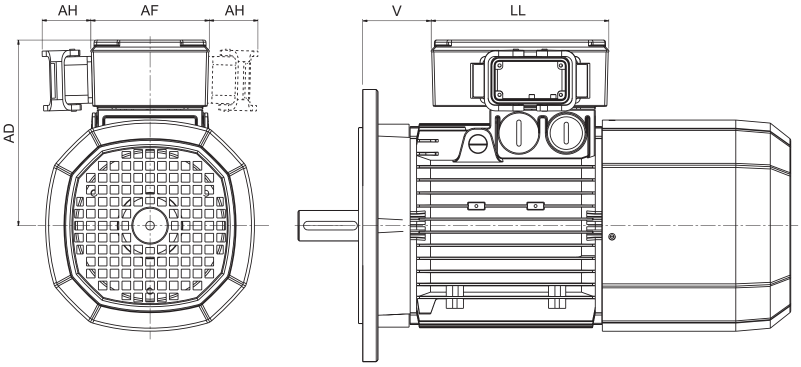

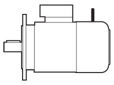	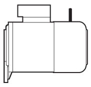	**AD** (mm)	**AF** (mm)	**AH** (mm)	**LL** (mm)	**V**(*) (mm)
BN63	**M05**	136	110	45	165	4.5
BN71	**M1**	149	110	45	165	1.5
BN80	**M2**	160	110	45	165	18.5
BN90	**—**	162	110	45	165	39.5
BN100	**M3**	171	110	45	165	63.5
BN112	**—**	186	110	45	165	75
BN132	**M4**	210	140	45	188	122
BN160MR	**—**	210	140	45	188	161

(*) Dimension gilt nur für Motoren BN.

M9.6 Kontrolle der Funktionstüchtigkeit der Bremse

MSW

Der Mikroschalter kann entsprechend eingestellt werden, um das Anziehen / Lösen des beweglichen Ankers oder das Erreichen des zulässigen Höchstwerts für den Luftspalt zu melden.
Die MSW-Option ist für die Bremsen FD03...FD09 verfügbar.
Der Mikroschalter ist mit drei Anschlussklemmen NC, NO, COM versehen. In der nachfolgenden Zeichnung sind die wesentlichen Komponenten der mit Mikroschalter ausgestatteten Bremse dargestellt.

(F 52)

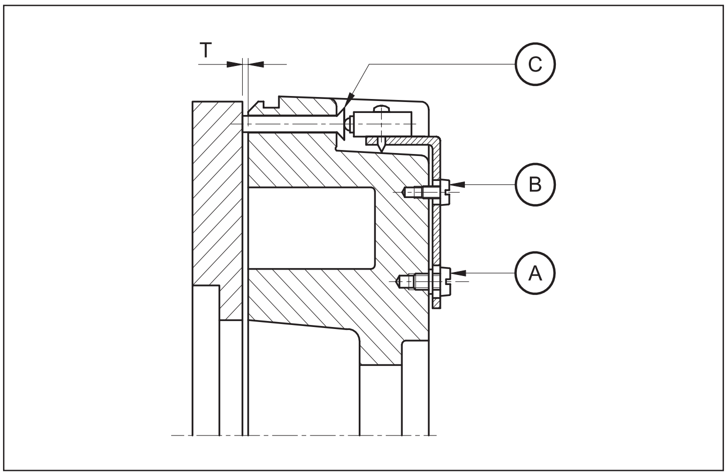

A: Befestigungsschrauben
B: Einstellschraube
C: Antrieb

M9.7 Zusätzlicher Kabeleingang für Bremsmotoren

IC

Am Klemmenkasten der Bremsmotoren BN63...BN160MR / M05...M4 sind zwei zusätzliche Kabeleingänge M16 x 1,5 verfügbar (einer pro Seite).
Am Klemmenkasten der Bremsmotoren BN160...BN200 / M5 ist ein zusätzlicher Kabeleingang M16 x 1,5 neben dem Eingang des Bremskabels verfügbar.

M9.8 Wicklungsheizung

H1 **NH1**

Die Motoren, die in besonders feuchten Umgebungen und/oder unter starken Temperaturschwankungen eingesetzt werden, können mit einem Heizelement als Kondenwasserschutz ausgestattet werden.
Die einphasige Versorgung erfolgt über eine Zusatzklemmleiste, die sich im Klemmkasten befindet. Werte fuer die Leistungsaufnahme sind in folgender Tabelle aufgeführt.

(F 53)

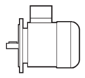	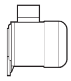	H1	NH1
		1~ 230V ± 10% P [W]	1~ 115V ± 10% P [W]
BN 56...BN 80	**M0...M2**	10	10
BN 90...BN 160MR	**M3 - M4**	25	25
BN 160M...BN 180M	**M5**	50	50
BN 180L...BN 200L	**—**		

Warnung!
Während des Motorbetriebs darf die Wicklungsheizung nie in Betrieb sein.

M9.9 Tropenschutz

TP

Wird die Option **TP** bestellt, wird die Motorwicklung mit einem zusätzlichen Schutz ausgestattet, der ihren Einsatz unter hohen Temperaturen und starker Feuchtigkeit ermöglicht.

M9.10 Zweites Wellenende

PS

Diese Option schließt die Optionen RC, TC, U1, U2, EN1, EN2, EN3, EN4, EN5, EN6. Die entsprechenden Abmessungen können den Maßtabellen der Motoren entnommen werden.

(F 54)

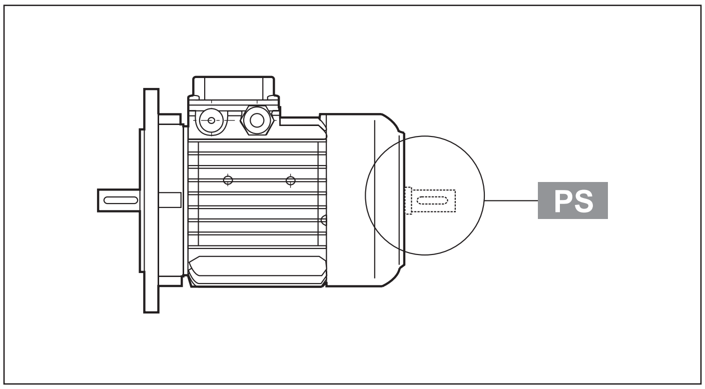

M9.11 Rücklaufsperre

AL **AR**

Wenn ein durch die Last verursachtes Zurückdrehen des Motors verhindert werden soll, kann eine Rücklaufsperre integriert werden (nur bei Serie M verfügbar).
Diese Vorrichtung, die eine völlig ungehinderte Drehung des Motors in Laufrichtung gestattet, greift sofort ein, wenn die Spannung fehlt, und verhindert die Drehung der Welle in die Gegenrichtung. Die Rücklaufsperre verfügt über eine Dauerschmierung mit einem speziell für diese Anwendung geeignetem Fett. Bei der Bestellung muss die vorgesehene Drehrichtung des Motors angegeben werden. Die Rücklaufsperre darf keinesfalls verwendet werden, um im Falle eines fehlerhaften elektrischen Anschlusses die Drehung in die Gegenrichtung zu verhindern. In Tabelle (F55) sind die Nenn- und Höchstdrehmomente für die verwendeten Rücklaufsperren angegeben; Abbildung (F56) zeigt eine schematische Darstellung der Vorrichtung. Die Abmessungen sind ähnlich denen der Bremsmotoren. Die Richtungsangabe der freien Rotation ist in dem Getriebeteil des Katalogs unter dem Abschnitt „OPTIONEN MOTOREN“ beschrieben.

(F 55)

	Nenndrehmoment der Sperre [Nm]	Max. Drehmoment der Sperre [Nm]	Ausrückgeschwindigkeit [min^{-1}]
M1	6	10	750
M2	16	27	650
M3	54	92	520
M4	110	205	430

(F 56)

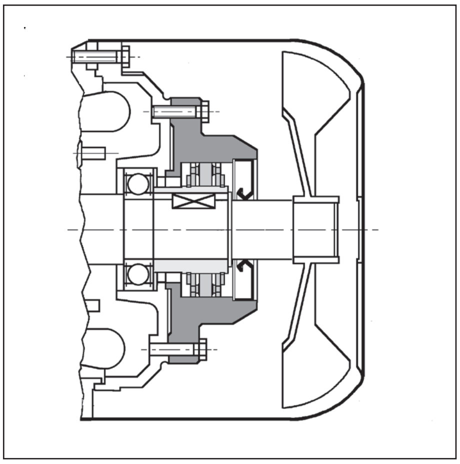

M9.12 Belüftung

Die Motoren werden mittels Eigenbelüftung gekühlt (IC 411 gemäss CEI EN 60034-6) und sind mit einem Radiallüfterrad aus Kunststoff ausgestattet, welches in beiden Drehrichtungen wirksam ist. Bei der Montage des Motors muss darauf geachtet werden, dass zwischen Lüfterhaube und dem nächsten Bauteil ein Mindestabstand eingehalten wird, um die Luftzirkulation nicht zu beeinträchtigen. Dieser Abstand ist ebenso für die regelmäßige Wartung des Motors und, falls vorhanden, der Bremse erforderlich. Ab der Baugröße BN 71 oder M 1 können die Motoren auf Anfrage mit einem unabhängig gespeisten Fremdlüfter geliefert werden. Die Kühlung erfolgt hier durch einen Axialventilator, der an Stelle der Standardlüfterhaube (Kühlmethode IC 416) montiert wird.
Diese Ausführung sollte eingesetzt werden, falls der Motor über einen Frequenzumrichter auch bei kleinen Drehzahlen mit Nennmoment betrieben wird oder bei hoher Schalthäufigkeit.
Brake motors of motors with rear shaft projection (PS option) are excluded.

(F 57)

Daten der Stromversorgung					
		V a.c. ± 10%	**Hz**	**P** [W]	**I** [A]
BN 71	**M1**	1~ 230	50 / 60	22	0.12
BN 80	**M2**			22	0.12
BN 90	**—**			40	0.30
BN 100 (*)	**M3**			50	0.25
BN 112	**—**	3~ 230 Δ / 400Y		50	0.26 / 0.15
BN 132S	**M4S**			110	0.38 / 0.22
BN 132M...BN 160MR	**M4L**				
BN 160...BN 180M	**M5**		50	180	1.25 / 0.72

Für diese Option sind als Alternative zwei Ausführungen verfügbar: **U1** und **U2** mit gleichen Längenmaßen. Für beide Ausführungen wird die Verlängerung der Lüfterhaube (**DL**) in der nachstehenden Tabelle angegeben.
Die Gesamtmaße der Motoren können den Tabellen mit den Motormaßen entnommen werden.

(F 58)

Tabelle - Motorverlängerung			
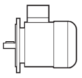	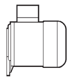	ΔL_1	ΔL_2
BN 71	**M1**	93	32
BN 80	**M2**	127	55
BN 90	**—**	131	48
BN 100	**M3**	119	28
BN 112	**—**	130	31
BN 132S	**M4S**	161	51
BN 132M	**M4L**	161	51

ΔL_1 = Maßänderung gegenüber Maß LB des entsprechenden Standardmotors
ΔL_2 = Maßänderung gegenüber Maß LB des entsprechenden Bremsmotors

U1

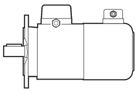

Versorgungsanschlüsse des Ventilators befinden sich im Zusatzklemmkasten.
Bei den Bremsmotoren in der Baugröße BN 71...BN 160MR, M1...M4L, mit Option **U1**, kann der Bremslüfthebel nicht in der Position AA stehen.Die Option ist nicht verfügbar für die Motoren entsprechend den Normen CSA und UL (Option CUS).

U2

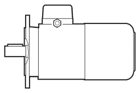

Versorgungsanschlüsse des Ventilators befinden sich im Hauptklemmkasten des Motors.
Die Option **U2** ist nicht verfügbar für die Motoren BN 160M...BN 200L, M5, mit Ausnahme des Motors BN160MR und nicht für Motoren mit CUS-Option (entsprechend den Normen CSA und UL).

(F 59)

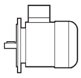	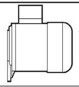	**V a.c.** ±10%	**Hz**	**P** [W]	**I** [A]
BN 71	**M1**	1 ~ 230	50 / 60	22	0.12
BN 80	**M2**			22	0.12
BN 90	**–**			40	0.30
BN 100	**M3**	3 ~ 230Δ / 400Y		40	0.26 / 0.09
BN 112	**–**			50	0.26 / 0.15
BN 132 ... BN 160MR	**M4L**			110	0.38 / 0.22

M9.13 Regenschutzdach

RC

Das Regenschutzdach RC wird empfohlen, wenn der Motor senkrecht mit einer nach unten gerichteten Welle montiert wird. Es dient dem Schutz des Motors vor dem Eindringen von festen Fremdkörpern und Tropfwasser. Die Abmessungen werden in der folgende Tabelle angegeben. Die Schutzdachoption schließt die Möglichkeit der Optionen PS, EN1, EN2, EN3, EN4, EN5, EN6.

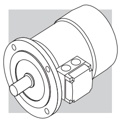

(F 60)

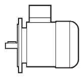	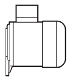	AQ	ΔV
BN 63	**M05**	118	24
BN 71	**M1**	134	27
BN 80	**M2**	152	25
BN 90	**—**	168	30
BN 100	**M3**	190	28
BN 112	**—**	211	32
BN 132...BN 160MR	**M4**	254	32
BN 160M...BN 180M	**M5**	302	36
BN 180L...BN 200L	**—**	340	36

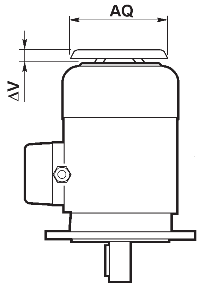

M9.14 Textilschutzdach

TC

Bei der Option TC handelt es sich um ein Schutzdach mit einem Textilnetz, dessen Einsatz empfohlen wird, wenn der Motor in Bereichen der Textilindustrie installiert wird, in denen Stofffusseln das Lüfterradgitter verstopfen und so einen ausreichenden Kühlluftfluss verhindern könnten. Diese Option schließt die Möglichkeit der Optionen EN1, EN2, EN3, EN4, EN5, EN6. Die Gesamtmaße entsprechen denen des Schutzdachs vom Typ RC.

M9.15 Drehgeberanschluss

Die Motoren können mit sechs unterschiedlichen Encodertypen ausgestattet werden. Nachstehend finden Sie die entsprechenden Beschreibungen. Die Montage eines Encoders schließt die Version mit zweitem Wellenende (PS) und Schutzdach (RC, TC) aus.

EN1

Inkremental-Encoder, V_{IN} = 5 V, Ausgang „line-driver“ RS 422.

EN2

Inkremental-Encoder, V_{IN} = 10-30 V, Ausgang „line-driver“ RS 422

EN3

Inkremental-Encoder, V_{IN} = 12-30 V, Ausgang „push-pull“ 12-30 V

EN4

Encoder sin/cos, V_{IN} = 4,5-5,5 V, Sinus-Ausgang 0,5 V_{PP}.

EN5

Absolut-Encoder mit Einzelwindung, Schnittstelle HIPERFACE®, V_{IN} = 7-12 V.

EN6

Absolut-Encoder mit Mehrfachwindung, Schnittstelle HIPERFACE®, V_{IN} = 7-12 V.

(F 61)

		EN1	EN2	EN3	EN4	EN5	EN6
Schnittstelle		TTL/RS 422	TTL/RS 422	HTL/push-pull	Sinus 0.5 VPP	HIPERFACE®	HIPERFACE®
Versorgungsspannung	[V]	4...6	10...30	12...30	4.4...5.5	7...12	7...12
Ausgangsspannung	[V]	5	5	12...30	—	—	—
Betriebsstrom ohne Belastung	[mA]	120	100	100	40	80	80
Impulse pro Drehung		1024					
Positionen pro Umdrehung		—	—	—	—	15 bit	15 bit
Revolutionen		—	—	—	—	—	12 bit
Signale		6 (A, B, Z + invertierte Signale)			6 (cos-, cos+, sin-, sin+, Z, $\overline{Z}$)	—	—
Max. Ausgangsfrequenz	[kHz]	600			200		
Max. Drehzahl	[min^{-1}]	6000 (9000 min^{-1} für 10 s)					
Betriebstemperaturbereich	[°C]	-30 ... +100					
Schutzgrad		IP 65					

(F 62)

EN1, EN2, EN3, EN4, EN5, EN6

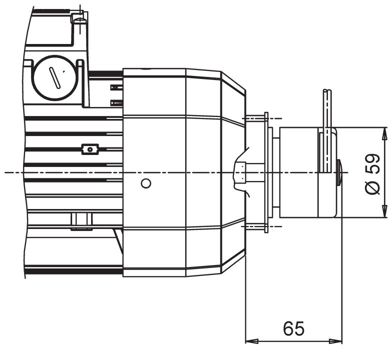

BN 63...BN 200L	**M05...M5**
BN 63_FD...BN 200L_FD	**M05_FD...M5_FD**
BN 63_FA...BN 200L_FA	**M05_FA...M5_FA**

(F 63)

EN_ + U1

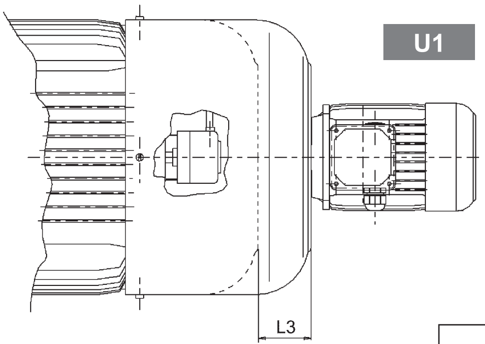

		L3
BN 160M...BN 180M	**M5**	72
BN 180L...BN 200L	**-**	82
BN 160M_FD...BN 180M_FD	**M5_FD**	35
BN 180L_FD...BN 200L_FD	**-**	41

Wenn der Encoder (Option EN_) für Motoren der Baugrößen BN71...BN160MR / M1...M4 zusammen mit Fremdlüftung (Optionen U1, U2) ausgelegt ist, stimmen die Maßänderungen des Motors mit jenen der entsprechenden Ausführungen U1 und U2 überein.

M9.16 Oberflächenschutz

C_

Wenn keine besondere Korrosionsschutzklasse gefordert ist, ist die lackierte Oberfläche des Motoren mindestens mit einem Schutz gegen Korrosion der Klasse C2 nach UNI EN ISO 12944-2 geschützt. Für eine bessere Witterungsbeständigkeit können die Motor durch eine Lackierung mit einem Oberflächenschutz der Klassen C3 und C4 geliefert werden.

OBERFLÄCHENSCHUTZ	Typische Umgebungen	Maximale Oberflächen-temperatu	Korrosionsschutzklasse nach UNI EN ISO 12944-2
C3	Stadt- und Industrieumgebung mit bis zu 100% relativer Luftfeuchtigkeit (mittlere Luftverschmutzung)	120°C	C3
C4	Industrie- und Küstengebiete und Chemieanlagen mit bis zu 100% relativer Luftfeuchtigkeit (hohe Luftverschmutzung)	120°C	C4

Die Motoren mit einem optionalen Korrosionsschutz der Klassen C3 oder C4 sind in einer Auswahl von Farben verfügbar. Wenn keine spezielle Farbe gefordert ist, (siehe Option „Lackierung“) ist der Decklack in RAL 7042.
Unsere Motor können auch mit Oberflächenschutz der Klasse C5 nach UNI EN ISO 12944-2 versehen werden. Für weitere technische Informationen wenden Sie bitte an unseren Technischen Service.

M9.17 Lackierung

RAL_

Die Motoren mit Oberflächenschutz der Klasse C3 oder C4, sind in den, in der folgenden Liste aufgelisteten Farben, verfügbar.

LACKIERUNG	Farbe	RAL Nummer
RAL7042*	Traffic Grey A	7042
RAL5010	Gentian Blue	5010
RAL9005	Jet Black	9005
RAL9006	White Aluminium	9006
RAL9010	Pure White	9010

* Die Getriebe werden in dieser Standardfarbe geliefert, wenn keine andere Farbe angegeben ist.

Hinweis – Die Option “Lackierung” kann nur im Zusammenhang mit dem Oberflächenschutz spezifiziert werden.

M9.18 Nachweise

ACM

Konformitätsbescheinigung von Motoren Dokument mit dessen Ausstellung die Konformität des Produkts mit dem Auftrag, und dessen Konstruktion in Konformität mit den vom Qualitätsmanagementsystem von Bonfiglioli Riduttori vorgesehenen Standardfertigungs- und -kontrollverfahren bescheinigt wird.

CC

Prüfzeugnis
Die Bestellung führt zur Durchführung von Kontrollen der Konformität mit dem Auftrag, allgemeinen Sichtkontrollen und instrumentalen Prüfung der elektrischen Eigenschaften in unbelasteten Bedingungen. Die Prüfung wird anhand einer Stichprobe des Versandloses durchgeführt.

2P **3000 min^{-1} - S1** **50 Hz**

																G.S.-Bremse FD						W.S.-Bremse FA				
P_n kW			n min^{-1}	M_n Nm	IE1	η (100%) %	η (75%) %	η (50%) %	cosφ	In 400V A	Is/In	Ms/Mn	Ma/Mn	J_m x 10^{-4} kgm^2	IM B5 Kg	Mod	Mb Nm	Z_o 1/h NB	Z_o 1/h SB	J_m x 10^{-4} kgm^2	IM B5 Kg	Mod	Mb Nm	Z_o 1/h	J_m x 10^{-4} kgm^2	IM B5 Kg
0.18	**BN 63A**	**2**	2730	0.63	○	59.9	56.9	51.9	0.77	0.56	3.0	2.1	2.0	2.0	3.5	**FD 02**	1.75	3900	4800	2.6	5.2	**FA 02**	1.75	4800	2.6	5.0
0.25	**BN 63B**	**2**	2740	0.87	○	66.0	64.8	64.8	0.76	0.72	3.3	2.3	2.3	2.3	3.9	**FD 02**	1.75	3900	4800	3.0	5.6	**FA 02**	1.75	4800	3.0	5.4
0.37	**BN 63C**	**2**	2800	1.26	○	69.1	66.8	66.8	0.78	0.99	3.9	2.6	2.6	3.3	5.1	**FD 02**	3.5	3600	4500	3.9	6.8	**FA 02**	3.5	4500	3.9	6.6
0.37	**BN 71A**	**2**	2820	1.25	○	73.8	73.0	70.6	0.76	0.95	4.8	2.8	2.6	3.5	5.4	**FD 03**	3.5	3000	4100	4.6	8.1	**FA 03**	3.5	4200	4.6	7.8
0.55	**BN 71B**	**2**	2820	1.86	○	76.0	75.8	74.8	0.76	1.37	5.0	2.9	2.8	4.1	6.2	**FD 03**	5	2900	4200	5.3	8.9	**FA 03**	5	4200	5.3	8.6
0.75	**BN 71C**	**2**	2810	2.6	○	76.6	76.2	76.2	0.76	1.86	5.1	3.1	2.8	5.0	7.3	**FD 03**	5	1900	3300	6.1	10.0	**FA 03**	5	3600	6.1	9.7
0.75	**BN 80A**	**2**	2810	2.6	•	76.2	75.5	68.3	0.81	1.75	4.8	2.6	2.2	7.8	8.6	**FD 04**	5	1700	3200	9.4	12.5	**FA 04**	5	3200	9.4	12.4
1.1	**BN 80B**	**2**	2800	3.8	•	76.4	76.2	75.0	0.81	2.57	4.8	2.8	2.4	9.0	9.5	**FD 04**	10	1500	3000	10.6	13.4	**FA 04**	10	3000	10.6	13.3
1.5	**BN 80C**	**2**	2800	5.1	•	79.1	79.5	77.2	0.81	3.4	4.9	2.7	2.4	11.4	11.3	**FD 04**	15	1300	2600	13.0	15.2	**FA 04**	15	2600	13.0	15.1
1.5	**BN 90SA**	**2**	2870	5.0	•	82.0	81.5	78.1	0.80	3.4	5.9	2.7	2.6	12.5	12.3	**FD 14**	15	900	2200	14.1	16.5	**FA 14**	15	2200	14.1	16.4
1.85	**BN 90SB**	**2**	2880	6.1	•	82.5	82.0	75.4	0.80	4.0	6.2	2.9	2.6	16.7	14	**FD 14**	15	900	2200	18.3	18.2	**FA 14**	15	2200	18.3	18.1
2.2	**BN 90L**	**2**	2880	7.3	•	82.7	82.1	80.8	0.80	4.8	6.3	2.9	2.7	16.7	14	**FD 05**	26	900	2200	21	20	**FA 05**	26	2200	21	20.7
3	**BN 100L**	**2**	2860	10.0	•	81.5	81.3	77.4	0.79	6.7	5.6	2.6	2.2	31	20	**FD 15**	26	700	1600	35	26	**FA 15**	26	1600	35	27
4	**BN 100LB**	**2**	2870	13.3	•	83.1	83.0	77.8	0.80	8.7	5.8	2.7	2.5	39	23	**FD 15**	40	450	900	43	29	**FA 15**	40	1000	43	30
4	**BN 112M**	**2**	2900	13.2	•	85.5	84.5	83.0	0.82	8.2	6.9	3.0	2.9	57	28	**FD 06S**	40	—	950	66	39	**FA 06S**	40	950	66	40
5.5	**BN 132SA**	**2**	2890	18.2	•	84.7	84.5	81.2	0.84	11.2	5.9	2.6	2.2	101	35	**FD 06**	50	—	600	112	48	**FA 06**	50	600	112	49
7.5	**BN 132SB**	**2**	2900	25	•	86.5	86.3	84.4	0.85	14.7	6.4	2.6	2.2	145	42	**FD 06**	50	—	550	154	55	**FA 06**	50	550	154	56
9.2	**BN 132M**	**2**	2930	30	•	87.0	86.5	83.6	0.86	17.7	6.7	2.8	2.3	178	53	**FD 56**	75	—	430	189	66	**FA 06**	75	430	189	67
11	**BN 160MR**	**2**	2920	36	•	87.6	87.0	86.0	0.88	20.6	6.9	2.9	2.5	210	65											
15	**BN 160MB**	**2**	2930	49	•	89.6	89.4	88.0	0.86	28.1	7.1	2.6	2.3	340	84											
18.5	**BN 160L**	**2**	2930	60	•	90.4	90.1	89.0	0.86	34	7.6	2.7	2.3	420	97											
22	**BN 180M**	**2**	2930	72	•	89.9	89.7	89.5	0.88	40	7.8	2.6	2.4	490	109											
30	**BN 200LA**	**2**	2930	98	•	90.7	90.1	87.6	0.89	54	7.8	2.7	2.9	770	140											

○ = n.a. • = IE1

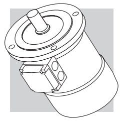

4P **1500 min^{-1} - S1** **50 Hz**

																G.S.-Bremse FD						W.S.-Bremse FA				
P_n kW			n min^{-1}	M_n Nm	IE1	η (100%) %	η (75%) %	η (50%) %	cosφ	In 400V A	Is/In	Ms/Mn	Ma/Mn	J_m x 10^{-4} kgm^2	IM B5 Kg	Mod	Mb Nm	Z_o 1/h NB	Z_o 1/h SB	J_m x 10^{-4} kgm^2	IM B5 Kg	Mod	Mb Nm	Z_o 1/h	J_m x 10^{-4} kgm^2	IM B5 Kg
0.06	**BN 56A**	**4**	1340	0.43	○	46.8	44.2	41.3	0.65	0.28	2.6	2.3	2.0	1.5	3.1											
0.09	**BN 56B**	**4**	1350	0.64	○	51.7	47.6	42.9	0.60	0.42	2.6	2.5	2.4	1.5	3.1											
0.12	**BN 63A**	**4**	1350	0.85	○	59.8	56.2	47.0	0.62	0.47	2.6	1.9	1.8	2.0	3.5	**FD 02**	1.75	10000	13000	2.6	5.2	**FA 02**	1.75	13000	2.6	5.0
0.18	**BN 63B**	**4**	1320	1.30	○	54.8	52.9	52.5	0.67	0.71	2.6	2.2	2.0	2.3	3.9	**FD 02**	3.5	10000	13000	3.0	5.6	**FA 02**	3.5	13000	3.0	5.4
0.25	**BN 63C**	**4**	1340	1.78	○	65.3	65.0	57.9	0.69	0.80	2.7	2.1	1.9	3.3	5.1	**FD 02**	3.5	7800	10000	3.9	6.8	**FA 02**	3.5	10000	3.9	6.6
0.25	**BN 71A**	**4**	1380	1.73	○	63.7	62.2	59.1	0.73	0.78	3.3	1.9	1.7	5.8	5.1	**FD 03**	3.5	7700	11000	6.9	7.8	**FA 03**	3.5	11000	6.9	7.5
0.37	**BN 71B**	**4**	1370	2.6	○	66.8	66.7	63.0	0.76	1.05	3.7	2.0	1.9	6.9	5.9	**FD 03**	5	6000	9400	8.0	8.6	**FA 03**	5.0	9400	8.0	8.3
0.55	**BN 71C**	**4**	1380	3.8	○	69.0	68.9	68.8	0.74	1.55	4.1	2.3	2.3	9.1	7.3	**FD 53**	7.5	4300	8700	10.2	10.0	**FA 03**	7.5	8700	10.2	9.7
0.55	**BN 80A**	**4**	1390	3.8	○	72.0	71.3	69.7	0.77	1.43	4.1	2.3	2.0	15	8.2	**FD 04**	10	4100	8000	16.6	12.1	**FA 04**	10	8000	16.6	12.0
0.75	**BN 80B**	**4**	1400	5.1	●	75.0	74.5	69.3	0.78	1.85	4.9	2.7	2.5	20	9.9	**FD 04**	15	4100	7800	22	13.8	**FA 04**	15	7800	22	13.7
1.1	**BN 80C**	**4**	1400	7.5	●	75.5	76.2	70.4	0.78	2.7	5.1	2.8	2.5	25	11.3	**FD 04**	15	2600	5300	27	15.2	**FA 04**	15	5300	27	15.1
1.1	**BN 90S**	**4**	1390	7.6	●	76.5	76.2	72.2	0.77	2.70	4.6	2.6	2.2	21	12.2	**FD 14**	15	4800	8000	23	16.4	**FA 14**	15	8000	23	16.3
1.5	**BN 90LA**	**4**	1410	10.2	●	78.7	78.5	74.9	0.77	3.6	5.3	2.8	2.4	28	13.6	**FD 05**	26	3400	6000	32	19.6	**FA 05**	26	6000	32	20.3
1.85	**BN 90LB**	**4**	1390	12.7	●	78.6	78.9	77.2	0.79	4.3	5.1	2.8	2.6	30	15.1	**FD 05**	26	3200	5900	34	21.1	**FA 05**	26	5900	34	21.8
2.2	**BN 100LA**	**4**	1410	14.9	●	81.1	81.4	79.9	0.75	5.2	4.5	2.2	2.0	40	18	**FD 15**	40	2600	4700	44	25	**FA 15**	40	4700	44	25
3	**BN 100LB**	**4**	1410	20	●	82.6	83.8	83.7	0.77	6.8	5.0	2.3	2.2	54	22	**FD 15**	40	2400	4400	58	28	**FA 15**	40	4400	58	29
4	**BN 112M**	**4**	1430	27	●	84.4	84.2	81.6	0.81	8.4	5.6	2.7	2.5	98	30	**FD 06S**	60	—	1400	107	40	**FA 06S**	60	2100	107	42
5.5	**BN 132S**	**4**	1440	36	●	84.7	84.8	82.5	0.81	11.6	5.5	2.3	2.2	213	44	**FD 56**	75	—	1050	223	57	**FA 06**	75	1200	223	58
7.5	**BN 132MA**	**4**	1440	50	●	86.0	86.3	85.3	0.81	15.5	5.7	2.5	2.4	270	53	**FD 06**	100	—	950	280	66	**FA 07**	100	1000	280	71
9.2	**BN 132MB**	**4**	1440	61	●	88.4	88.6	87.5	0.81	18.8	5.9	2.7	2.5	319	59	**FD 07**	150	—	900	342	75	**FA 07**	150	900	342	77
11	**BN 160MR**	**4**	1440	73	●	87.6	87.8	86.0	0.81	22.4	6.0	2.7	2.5	360	70	**FD 07**	150	—	850	382	86	**FA 07**	150	850	382	88
15	**BN 160L**	**4**	1460	98	●	88.7	88.5	88.4	0.81	30	6.0	2.3	2.1	650	99	**FD 08**	200	—	750	725	129	**FA 08**	200	750	710	128
18.5	**BN 180M**	**4**	1460	121	●	89.3	89.5	89.2	0.81	37	6.2	2.6	2.5	790	115	**FD 08**	250	—	700	865	145	**FA 08**	250	700	850	144
22	**BN 180L**	**4**	1460	144	●	89.9	90.0	90.0	0.80	44	6.4	2.5	2.5	1250	135	**FD 09**	300	—	400	1450	175					
30	**BN 200L**	**4**	1460	196	●	91.4	91.7	91.0	0.80	59	7.1	2.7	2.8	1650	157	**FD 09**	400	—	300	1850	197					

○ = n.a. ● = IE1

6P 1000 min^{-1} - S1 50 Hz

																G.S.-Bremse FD						W.S.-Bremse FA				
P_n kW	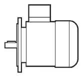		n min^{-1}	M_n Nm	IE1	η (100%) %	η (75%) %	η (50%) %	cosφ	In 400V A	Is/In	Ms/Mn	Ma/Mn	J_m x 10^{-4} kgm²	IM B5 Kg	Mod	Mb Nm	Z_o 1/h NB	Z_o 1/h SB	J_m x 10^{-4} kgm²	IM B5 Kg	Mod	Mb Nm	Z_o 1/h	J_m x 10^{-4} kgm²	IM B5 Kg
0.09	**BN 63A**	**6**	880	0.98	○	41.0	41.0	32.9	0.53	0.60	2.1	2.1	1.8	3.4	4.6	**FD 02**	3.5	9000	14000	4.0	6.3	**FA 02**	3.5	14000	4.0	6.1
0.12	**BN 63B**	**6**	870	1.32	○	45.0	44.0	41.8	0.60	0.64	2.1	1.9	1.7	3.7	4.9	**FD 02**	3.5	9000	14000	4.3	6.6	**FA 02**	3.5	14000	4.3	6.4
0.18	**BN 71A**	**6**	900	1.91	○	55.0	55.5	51.0	0.69	0.68	2.6	1.9	1.7	8.4	5.5	**FD 03**	5	8100	13500	9.5	8.2	**FA 03**	5.0	13500	9.5	7.9
0.25	**BN 71B**	**6**	900	2.70	○	62.0	58.5	51.4	0.71	0.82	2.6	1.9	1.7	10.9	6.7	**FD 03**	5	7800	13000	12	9.4	**FA 03**	5.0	13000	12	9.1
0.37	**BN 71C**	**6**	910	3.9	○	66.0	60.0	53.3	0.69	1.17	3.0	2.4	2.0	12.9	7.7	**FD 53**	7.5	5100	9500	14	10.4	**FA 03**	7.5	9500	14	10.1
0.37	**BN 80A**	**6**	910	3.9	○	68.0	67.4	63.3	0.68	1.15	3.2	2.2	2.0	21	9.9	**FD 04**	10	5200	8500	23	13.8	**FA 04**	10	8500	23	13.7
0.55	**BN 80B**	**6**	920	5.7	○	70.0	69.8	64.3	0.68	1.67	3.9	2.6	2.2	25	11.3	**FD 04**	15	4800	7200	27	15.2	**FA 04**	15	7200	27	15.1
0.75	**BN 80C**	**6**	920	7.8	•	70.0	70.0	64.4	0.65	2.38	3.8	2.5	2.2	28	12.2	**FD 04**	15	3400	6400	30	16.1	**FA 04**	15	6400	30	16.0
0.75	**BN 90S**	**6**	920	7.8	•	70.0	69.0	64.2	0.68	2.27	3.8	2.4	2.2	26	12.6	**FD 14**	15	3400	6500	28	16.8	**FA 14**	15	6500	28	16.7
1.1	**BN 90L**	**6**	920	11.4	•	72.9	72.6	69.1	0.69	3.2	3.9	2.3	2.0	33	15	**FD 05**	26	2700	5000	37	21	**FA 05**	26	5000	37	22
1.5	**BN 100LA**	**6**	940	15.2	•	75.2	74.2	70.3	0.72	4.0	4.1	2.1	2.0	82	22	**FD 15**	40	1900	4100	86	28	**FA 15**	40	4100	86	29
1.85	**BN 100LB**	**6**	930	19.0	•	76.6	72.8	62.6	0.73	4.8	4.6	2.1	2.0	95	24	**FD 15**	40	1700	3600	99	30	**FA 15**	40	3600	99	31
2.2	**BN 112M**	**6**	940	22	•	78.5	79.0	76.5	0.73	5.5	4.8	2.2	2.0	168	32	**FD 06S**	60	—	2100	177	42	**FA 06S**	60	2100	177	44
3	**BN 132S**	**6**	940	30	•	79.7	77.0	75.1	0.76	7.1	5.1	1.9	1.8	216	36	**FD 56**	75	—	1400	226	49	**FA 06**	75	1400	226	50
4	**BN 132MA**	**6**	950	40	•	81.4	81.5	79.5	0.77	9.2	5.5	2.0	1.8	295	45	**FD 06**	100	—	1200	305	58	**FA 07**	100	1200	318	63
5.5	**BN 132MB**	**6**	945	56	•	83.1	80.9	79.1	0.78	12.2	6.1	2.1	1.9	383	56	**FD 07**	150	—	1050	406	72	**FA 07**	150	1050	406	74
7.5	**BN 160M**	**6**	955	75	•	85.0	85.0	84.8	0.81	15.7	5.9	2.2	2.0	740	83	**FD 08**	170	—	900	815	112	**FA 08**	170	900	815	113
11	**BN 160L**	**6**	960	109	•	86.4	86.5	85.9	0.81	22.7	6.6	2.5	2.3	970	103	**FD 08**	200	—	800	1045	133	**FA 08**	200	800	1045	133
15	**BN 180L**	**6**	970	148	•	87.7	88.0	87.3	0.82	30	6.2	2.0	2.4	1550	130	**FD 09**	300	—	600	1750	170					
18.5	**BN 200LA**	**6**	960	184	•	88.6	88.0	87.3	0.81	37	5.9	2.0	2.3	1700	145	**FD 09**	400	—	450	1900	185					

○ = n.a. • = IE1

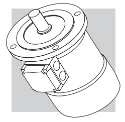

8P 750 min^{-1} - S1 50 Hz

P_n			n	M_n	η	cosφ	In	Is/In	Ms/Mn	Ma/Mn	J_m	IM B5	G.S.-Bremse FD						W.S.-Bremse FA				
							400V				x 10^{-4}	Kg	Mod	Mb	Z_o 1/h		J_m x 10^{-4}	IM B5 Kg	Mod	Mb	Z_o 1/h	J_m x 10^{-4}	IM B5 Kg
kW			min^{-1}	Nm	%		A				kgm^2			Nm	NB	SB	kgm^2			Nm		kgm^2	
0.09	**BN 71A**	**8**	680	1.26	47	0.59	0.47	2.3	2.4	2.3	10.9	6.7	**FD 03**	3.5	9000	16000	12.0	9.4	**FA 03**	3.5	16000	12.0	9.1
0.12	**BN 71B**	**8**	680	1.69	51	0.59	0.58	2.1	2.3	2.2	12.9	7.7	**FD 03**	5.0	9000	16000	14.0	10.4	**FA 03**	5.0	16000	14.0	10.1
0.18	**BN 80A**	**8**	690	2.49	51	0.60	0.85	2.4	2.2	2.2	15	8.2	**FD 04**	5.0	6500	11000	16.6	12.1	**FA 04**	5.0	11000	16.6	12.0
0.25	**BN 80B**	**8**	680	3.51	54	0.63	1.06	2.4	2.0	1.9	20	9.9	**FD 04**	10.0	6000	10000	22	13.8	**FA 04**	10.0	10000	23	13.7
0.37	**BN 90S**	**8**	675	5.2	58	0.60	1.53	2.6	2.3	2.1	26	12.6	**FD 14**	15.0	4800	7500	28	16.8	**FA 14**	15.0	7500	28	16.7
0.55	**BN 90L**	**8**	670	7.8	62	0.60	2.13	2.6	2.2	2.0	33	15	**FD 05**	26	4000	6400	37	21	**FA 05**	26	6400	37	22
0.75	**BN 100LA**	**8**	700	10.2	68	0.63	2.53	3.4	1.9	1.7	82	22	**FD 15**	26	2800	4800	86	28	**FA 15**	26	4800	86	29
1.1	**BN 100LB**	**8**	700	15.0	68	0.64	3.65	3.2	1.7	1.7	95	24	**FD 15**	40	2500	4000	99	30	**FA 15**	40	4000	99	31
1.5	**BN 112M**	**8**	710	20.2	71	0.66	4.6	3.7	1.8	1.9	168	32	**FD 06S**	60	—	3000	177	42	**FA 06S**	60	3000	177	44
2.2	**BN 132S**	**8**	710	29.6	75	0.66	6.4	3.8	1.8	2.0	295	45	**FD 56**	75	—	2300	305	58	**FA 06**	75	2300	305	56
3	**BN 132MA**	**8**	710	40.4	76	0.69	8.3	3.9	1.6	1.8	370	53	**FD 06**	100	—	1900	394	69	**FA 07**	100	1900	406	74

2/4P 3000/1500 min^{-1} - S1 50 Hz

													G.S.-Bremse						W.S.-Bremse				
													FD						FA				
P_n			n	M_n	η	cosφ	In 400V	Is/In	Ms/Mn	Ma/Mn	J_m x 10^{-4}	IM B5	Mod	Mb	Z_o 1/h		J_m x 10^{-4}	IM B5	Mod	Mb	Z_o 1/h	J_m x 10^{-4}	IM B5
kW			min^{-1}	Nm	%		A				kgm^2	Kg		Nm	NB	SB	kgm^2	Kg		Nm		kgm^2	Kg
0.20	**BN 63B**	**2**	2700	0.71	55	0.82	0.64	3.5	2.1	1.9	2.9	4.4	**FD 02**	3.5	2200	2600	3.5	6.1	**FA 02**	3.5	2600	3.5	5.9
0.15		**4**	1350	1.06	49	0.67	0.66	2.6	1.8	1.7					4000	5100					5100		
0.28	**BN 71A**	**2**	2700	0.99	56	0.82	0.88	2.9	1.9	1.7	4.7	4.4	**FD 03**	3.5	2100	2400	5.8	7.1	**FA 03**	3.5	2400	5.8	6.8
0.20		**4**	1370	1.39	59	0.72	0.68	3.1	1.8	1.7					3800	4800					4800		
0.37	**BN 71B**	**2**	2740	1.29	56	0.82	1.16	3.5	1.8	1.8	5.8	5.1	**FD 03**	5.0	1400	2100	6.9	7.8	**FA 03**	5.0	2100	6.9	7.5
0.25		**4**	1390	1.72	60	0.73	0.82	3.3	2.0	1.9					2900	4200					4200		
0.45	**BN 71C**	**2**	2780	1.55	63	0.85	1.21	3.8	1.8	1.8	6.9	5.9	**FD 03**	5.0	1400	2100	8.0	8.6	**FA 03**	5.0	2100	8.0	8.3
0.30		**4**	1400	2.0	63	0.73	0.94	3.6	2.0	1.9					2900	4200					4200		
0.55	**BN 80A**	**2**	2800	1.9	63	0.85	1.48	3.9	1.7	1.7	15	8.2	**FD 04**	5.0	1600	2300	17	12.1	**FA 04**	5.0	2300	16.6	12.0
0.37		**4**	1400	2.5	67	0.79	1.01	4.1	1.8	1.9					3000	4000					4000		
0.75	**BN 80B**	**2**	2780	2.6	65	0.85	1.96	3.8	1.9	1.8	20	9.9	**FD 04**	10	1400	1600	22	13.8	**FA 04**	10	1600	22	13.7
0.55		**4**	1400	3.8	68	0.81	1.44	3.9	1.7	1.7					2700	3600					3600		
1.1	**BN 90S**	**2**	2790	3.8	71	0.82	2.73	4.7	2.3	2.0	21	12.2	**FD 14**	10	1500	1600	23	16.4	**FA 14**	10	1600	23	16.3
0.75		**4**	1390	5.2	66	0.79	2.08	4.6	2.4	2.2					2300	2800					2800		
1.5	**BN 90L**	**2**	2780	5.2	70	0.85	3.64	4.5	2.4	2.1	28	14.0	**FD 05**	26	1050	1200	32	20	**FA 05**	26	1200	32	21
1.1		**4**	1390	7.6	73	0.81	2.69	4.7	2.5	2.2					1600	2000					2000		
2.2	**BN 100LA**	**2**	2800	7.5	72	0.85	5.2	4.5	2.0	1.9	40	18.3	**FD 15**	26	600	900	44	25	**FA 15**	26	900	44	25
1.5		**4**	1410	10.2	73	0.79	3.8	4.7	2.0	2.0					1300	2300					2300		
3.5	**BN 100LB**	**2**	2850	11.7	80	0.84	7.5	5.4	2.2	2.1	61	25	**FD 15**	40	500	900	65	31	**FA 15**	40	900	65	32
2.5		**4**	1420	16.8	82	0.80	5.5	5.2	2.2	2.2					1000	2100					2100		
4	**BN 112M**	**2**	2880	13.3	79	0.83	8.8	6.1	2.4	2.0	98	30	**FD 06S**	60	—	700	107	40	**FA 06S**	60	700	107	42
3.3		**4**	1420	22.2	80	0.80	7.4	5.1	2.1	2.0					—	1200					1200		
5.5	**BN 132S**	**2**	2890	18.2	80	0.87	11.4	5.9	2.4	2.0	213	44	**FD 56**	75	—	350	223	57	**FA 06**	75	350	223	58
4.4		**4**	1440	29	82	0.84	9.2	5.3	2.2	2.0					—	900					900		
7.5	**BN 132MA**	**2**	2900	25	82	0.87	15.2	6.5	2.4	2.0	270	53	**FD 06**	100	—	350	280	66	**FA 07**	100	350	293	71
6		**4**	1430	40	84	0.85	12.1	5.8	2.3	2.1					—	900					900		
9.2	**BN 132MB**	**2**	2920	30	83	0.86	18.6	6.0	2.6	2.2	319	59	**FD 07**	150	—	300	342	75	**FA 07**	150	300	342	77
7.3		**4**	1440	48	85	0.85	14.6	5.5	2.3	2.1					—	800					800		

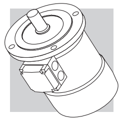

2/6P 3000/1000 min^{-1} - S3 60/40% 50 Hz

													G.S.-Bremse FD						W.S.-Bremse FA				
P_n kW	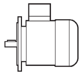		n min^{-1}	M_n Nm	η %	cosφ	In 400V A	Is/In	Ms/Mn	Ma/Mn	J_m x 10^{-4} kgm^2	IM B5 Kg	Mod	Mb Nm	Z_o 1/h NB	Z_o 1/h SB	J_m x 10^{-4} kgm^2	IM B5 Kg	Mod	Mb Nm	Z_o 1/h	J_m x 10^{-4} kgm^2	IM B5 Kg
0.25	**BN 71A**	**2**	2850	0.84	60	0.82	0.73	4.3	1.9	1.8	6.9	5.9	**FD 03**	1.75	1500	1700	8.0	8.6	**FA 03**	2.5	1700	8.0	8.3
0.08		**6**	910	0.84	43	0.70	0.38	2.1	1.4	1.5					10000	13000					13000		
0.37	**BN 71B**	**2**	2880	1.23	62	0.80	1.08	4.4	1.9	1.8	9.1	7.3	**FD 03**	3.5	1000	1300	10.2	10.0	**FA 03**	3.5	1300	10.2	9.7
0.12		**6**	900	1.27	44	0.73	0.54	2.4	1.4	1.5					9000	11000					11000		
0.55	**BN 80A**	**2**	2800	1.88	63	0.86	1.47	4.5	1.9	1.7	20	9.9	**FD 04**	5.0	1500	1800	22	13.8	**FA 04**	5.0	1800	22	13.7
0.18		**6**	930	1.85	52	0.65	0.77	3.3	2.0	1.9					4100	6300					6300		
0.75	**BN 80B**	**2**	2800	2.6	66	0.87	1.89	4.3	1.8	1.6	25	11.3	**FD 04**	5.0	1700	1900	27	15.2	**FA 04**	5.0	1900	27	15.1
0.25		**6**	930	2.6	54	0.67	1.00	3.2	1.7	1.8					3800	6000					6000		
1.10	**BN 90L**	**2**	2860	3.7	67	0.84	2.82	4.7	2.1	1.9	28	14.0	**FD 05**	13	1400	1600	32	20	**FA 05**	13	1600	32	21
0.37		**6**	920	3.8	59	0.71	1.27	3.3	1.6	1.6					3400	5200					5200		
1.5	**BN 100LA**	**2**	2880	5	73	0.84	3.53	5.1	1.9	2.0	40	18.3	**FD 15**	13	1000	1200	44	24	**FA 15**	13	1200	44	25
0.55		**6**	940	5.6	64	0.67	1.85	3.5	1.7	1.8					2900	4000					4000		
2.2	**BN 100LB**	**2**	2900	7.2	77	0.85	4.9	5.9	2.0	2.0	61	25	**FD 15**	26	700	900	65	31	**FA 15**	26	900	65	32
0.75		**6**	950	7.5	67	0.64	2.5	3.3	1.9	1.8					2100	3000					3000		
3	**BN 112M**	**2**	2900	9.9	78	0.87	6.4	6.3	2.0	2.1	98	30	**FD 06S**	40	—	1000	107	40	**FA 06S**	40	1000	107	32
1.1		**6**	950	11.1	72	0.64	3.4	3.9	1.8	1.8					—	2600					2600		
4.5	**BN 132S**	**2**	2910	14.8	78	0.84	9.9	5.8	1.9	1.8	213	44	**FD 56**	37	—	500	223	57	**FA 06**	37	500	223	58
1.5		**6**	960	14.9	74	0.67	4.4	4.2	1.9	2.0					—	2100					2100		
5.5	**BN 132M**	**2**	2920	18.0	78	0.87	11.7	6.2	2.1	1.9	270	53	**FD 56**	50	—	400	280	66	**FA 06**	50	400	280	67
2.2		**6**	960	22	77	0.71	5.8	4.3	2.1	2.0					—	1900					1900		

2/8P 3000/750 min^{-1} - S3 60/40% 50 Hz

													G.S.-Bremse						W.S.-Bremse				
													FD						FA				
P_n kW			n min^{-1}	M_n Nm	η %	cosφ	In 400V A	Is/In	Ms/Mn	Ma/Mn	J_m x 10^{-4} kgm^2	IM B5 Kg	Mod	Mb Nm	Z_o 1/h NB	Z_o 1/h SB	J_m x 10^{-4} kgm^2	IM B5 Kg	Mod	Mb Nm	Z_o 1/h	J_m x 10^{-4} kgm^2	IM B5 Kg
0.25	**BN 71A**	**2**	2790	0.86	61	0.87	0.68	3.9	1.8	1.9	10.9	6.7	**FD 03**	1.75	1300	1400	12	9.4	**FA 03**	2.5	1400	12	9.1
0.06		**8**	680	0.84	31	0.61	0.46	2.0	1.8	1.9					10000	13000					13000		
0.37	**BN 71B**	**2**	2800	1.26	63	0.86	0.99	3.9	1.8	1.9	12.9	7.7	**FD 03**	3.5	1200	1300	14	10.4	**FA 03**	3.5	1300	14	10.1
0.09		**8**	670	1.28	34	0.75	0.51	1.8	1.4	1.5					9500	13000					13000		
0.55	**BN 80A**	**2**	2830	1.86	66	0.86	1.40	4.4	2.1	2.0	20	9.9	**FD 04**	5.0	1500	1800	22	13.8	**FA 04**	5.0	1800	22	13.7
0.13		**8**	690	1.80	41	0.64	0.72	2.3	1.6	1.7					5600	8000					8000		
0.75	**BN 80B**	**2**	2800	2.6	68	0.88	1.81	4.6	2.1	2.0	25	11.3	**FD 04**	10	1700	1900	27	15.2	**FA 04**	10	1900	27	15.1
0.18		**8**	690	2.5	43	0.66	0.92	2.3	1.6	1.7					4800	7300					7300		
1.10	**BN 90L**	**2**	2830	3.7	63	0.84	3.00	4.5	2.1	1.9	28	14.0	**FD 05**	13	1400	1600	32	20	**FA 05**	13	1600	32	21
0.28		**8**	690	3.9	48	0.63	1.34	2.4	1.8	1.9					3400	5100					5100		
1.5	**BN 100LA**	**2**	2880	5.0	69	0.85	3.69	4.7	1.9	1.8	40	18.3	**FD 15**	13	1000	1200	44	25	**FA 15**	13	1200	44	25
0.37		**8**	690	5.1	46	0.63	1.84	2.1	1.6	1.6					3300	5000					5000		
2.4	**BN 100LB**	**2**	2900	7.9	75	0.82	5.6	5.4	2.1	2.0	61	25	**FD 15**	26	550	700	65	31	**FA 15**	26	700	65	32
0.55		**8**	700	7.5	54	0.58	2.5	2.6	1.8	1.8					2000	3500					3500		
3	**BN 112M**	**2**	2900	9.9	76	0.87	6.5	6.3	2.1	1.9	98	30	**FD 06S**	40	—	900	107	40	**FA 06S**	40	900	107	42
0.75		**8**	690	10.4	60	0.65	2.8	2.5	1.6	1.6					—	2900					2900		
4	**BN 132S**	**2**	2870	13.3	73	0.84	9.4	5.6	2.3	2.4	213	44	**FD 56**	37	—	500	223	57	**FA 06**	37	500	223	58
1		**8**	690	13.8	66	0.62	3.5	2.9	1.9	1.8					—	3500					3500		
5.5	**BN 132M**	**2**	2870	18.3	75	0.84	12.6	6.1	2.4	2.5	270	53	**FD 06**	50	—	400	280	66	**FA 06**	50	400	280	67
1.5		**8**	690	21	68	0.63	5.1	2.9	1.9	1.9					—	2400					2400		

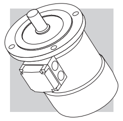

2/12P 3000/500 min^{-1} - S3 60/40% 50 Hz

													G.S.-Bremse FD						W.S.-Bremse FA				
P_n kW			n min^{-1}	M_n Nm	η %	cosφ	In 400V A	Is/In	Ms/Mn	Ma/Mn	J_m x 10^{-4} kgm^2	IM B5 Kg	Mod	Mb Nm	Z_o 1/h NB	Z_o 1/h SB	J_m x 10^{-4} kgm^2	IM B5 Kg	Mod	Mb Nm	Z_o 1/h	J_m x 10^{-4} kgm^2	IM B5 Kg
0.55	**BN 80B**	**2**	2820	1.86	64	0.89	1.39	4.2	1.6	1.7	25	11.3	**FD 04**	5.0	1000	1300	27	15.2	**FA 04**	5.0	1300	27	15.1
0.09		**12**	430	2.0	30	0.63	0.69	1.8	1.9	1.8					8000	12000					12000		
0.75	**BN 90L**	**2**	2790	2.6	56	0.89	2.17	4.2	1.8	1.7	26	12.6	**FD 05**	13	1000	1150	30	18.6	**FA 05**	13	1150	30	19.3
0.12		**12**	430	2.7	26	0.63	1.06	1.7	1.4	1.6					4600	6300					6300		
1.10	**BN 100LA**	**2**	2850	3.7	65	0.85	2.87	4.5	1.6	1.8	40	18.3	**FD 15**	13	700	900	44	25	**FA 15**	13	900	44	25
0.18		**12**	430	4.0	26	0.54	1.85	1.5	1.3	1.5					4000	6000					6000		
1.5	**BN 100LB**	**2**	2900	4.9	67	0.86	3.76	5.6	1.9	1.9	54	22	**FD 15**	13	700	900	58	28	**FA 15**	13	900	58	29
0.25		**12**	440	5.4	36	0.46	2.18	1.8	1.7	1.8					3800	5000					5000		
2	**BN 112M**	**2**	2900	6.6	74	0.88	4.43	6.5	2.1	2.0	98	30	**FD 06S**	20	—	800	107	40	**FA 06S**	20	800	107	42
0.3		**12**	460	6.2	46	0.43	2.19	2.0	2.1	2.0					—	3400					3400		
3	**BN 132S**	**2**	2920	9.8	74	0.87	6.7	6.8	2.3	1.9	213	44	**FD 56**	37	—	450	223	57	**FA 06**	37	450	223	58
0.5		**12**	470	10.2	51	0.43	3.3	2.0	1.7	1.6					—	3000					3000		
4	**BN 132M**	**2**	2920	13.1	75	0.89	8.6	5.9	2.4	2.3	270	53	**FD 56**	37	—	400	280	66	**FA 06**	37	400	280	67
0.7		**12**	460	14.5	53	0.44	4.3	1.9	1.7	1.6					—	2800					2800		

4/6P 1500/1000 min^{-1} - S1 50 Hz

													G.S.-Bremse						W.S.-Bremse				
													FD						FA				
P_n			n	M_n	η	cosφ	In 400V	Is/In	Ms/Mn	Ma/Mn	J_m x 10^{-4}	IM B5	Mod	Mb	Z_o 1/h		J_m x 10^{-4}	IM B5	Mod	Mb	Z_o 1/h	J_m x 10^{-4}	IM B5
kW			min^{-1}	Nm	%		A				kgm²	Kg		Nm	NB	SB	kgm²	Kg		Nm		kgm²	Kg
0.22	**BN 71B**	**4**	1410	1.5	64	0.74	0.67	3.9	1.8	1.9	9.1	7.3	**FD 03**	3.5	2500	3500	10.2	10.0	**FA 03**	3.5	3500	10.2	9.7
0.13		**6**	920	1.4	43	0.67	0.65	2.3	1.6	1.7					5000	9000					9000		
0.30	**BN 80A**	**4**	1410	2.0	61	0.82	0.87	3.5	1.3	1.5	15	8.2	**FD 04**	5.0	2500	3100	16.6	12.1	**FA 04**	5.0	3100	16.6	12.0
0.20		**6**	930	2.1	54	0.66	0.81	3.2	1.9	2.0					4000	6000					6000		
0.40	**BN 80B**	**4**	1430	2.7	63	0.75	1.22	3.9	1.8	1.8	20	9.9	**FD 04**	10	1800	2300	22	13.8	**FA 04**	10	2300	22	13.7
0.26		**6**	930	2.7	55	0.70	0.97	2.7	1.5	1.6					3600	5500					5500		
0.55	**BN 90S**	**4**	1420	3.7	70	0.78	1.45	4.5	2.0	1.9	21	12.2	**FD 14**	10	1500	2100	23	16.1	**FA 14**	10	2100	23	16.3
0.33		**6**	930	3.4	62	0.70	1.10	3.7	2.3	2.0					2500	4100					4100		
0.75	**BN 90L**	**4**	1420	5.0	74	0.78	1.88	4.3	1.9	1.8	28	14	**FD 05**	13	1400	2000	32	20	**FA 05**	13	2000	32	21
0.45		**6**	920	4.7	66	0.71	1.39	3.3	2.0	1.9					2300	3600					3600		
1.1	**BN 100LA**	**4**	1450	7.2	74	0.79	2.72	5.0	1.7	1.9	82	22	**FD 15**	26	1400	2000	86	28	**FA 15**	26	2000	86	29
0.8		**6**	950	8.0	65	0.69	2.57	4.1	1.9	2.1					2100	3300					3300		
1.5	**BN 100LB**	**4**	1450	9.9	75	0.79	3.65	5.1	1.7	1.9	95	25	**FD 15**	26	1300	1800	99	31	**FA 15**	26	1800	99	32
1.1		**6**	950	11.1	72	0.68	3.24	4.3	2.0	2.1					2000	3000					3000		
2.3	**BN 112M**	**4**	1450	15.2	75	0.78	5.7	5.2	1.8	1.9	168	32	**FD 06S**	40	—	1600	177	42	**FA 06S**	40	1600	177	44
1.5		**6**	960	14.9	73	0.72	4.1	4.9	2.0	2.0					—	2400					2400		
3.1	**BN 132S**	**4**	1460	20	83	0.83	6.5	5.9	2.1	2.0	213	44	**FD 56**	37	—	1200	223	57	**FA 06**	37	1200	223	58
2		**6**	960	20	77	0.75	4.9	4.5	2.1	2.1					—	1900					1900		
4.2	**BN 132MA**	**4**	1460	27	84	0.82	8.8	5.9	2.1	2.2	270	53	**FD 06**	50	—	900	280	66	**FA 06**	50	900	280	67
2.6		**6**	960	26	79	0.72	6.6	4.3	2.0	2.0					—	1500					1500		

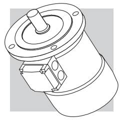

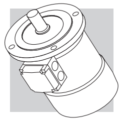

4/8P 1500/750 min^{-1} - S1 50 Hz

													G.S.-Bremse						W.S.-Bremse				
													FD						FA				
P_n			n	M_n	η	cosφ	In 400V	Is/In	Ms/Mn	Ma/Mn	J_m x 10^{-4}	IM B5	Mod	Mb	Z_o 1/h		J_m x 10^{-4}	IM B5	Mod	Mb	Z_o 1/h	J_m x 10^{-4}	IM B5
kW			min^{-1}	Nm	%		A				kgm^2	Kg		Nm	NB	SB	kgm^2	Kg		Nm		kgm^2	Kg
0.37	**BN 80A**	**4**	1400	2.5	63	0.82	1.03	3.3	1.4	1.4	15	8.2	**FD 04**	10	2300	3500	16.6	12.1	**FA 04**	10	3500	16.6	12.0
0.18		**8**	690	2.5	44	0.60	0.98	2.2	1.5	1.6					4500	7000					7000		
0.55	**BN 80B**	**4**	1390	3.8	65	0.86	1.42	3.8	1.7	1.6	20	9.9	**FD 04**	10	2200	2900	22	13.8	**FA 04**	10	2900	22	13.7
0.30		**8**	670	4.3	49	0.65	1.36	2.3	1.7	1.8					4200	6500					6500		
0.65	**BN 90S**	**4**	1390	4.5	73	0.85	1.51	4.0	1.9	1.9	28	13.6	**FD 14**	15	2300	2800	30	17.8	**FA 14**	15	2800	30	17.7
0.35		**8**	690	4.8	49	0.57	1.81	2.5	2.1	2.2					3500	6000					6000		
0.9	**BN 90L**	**4**	1370	6.3	73	0.87	2.05	3.8	1.8	1.8	30	15.1	**FD 05**	26	1700	2100	34	21	**FA 05**	26	2100	34	22
0.5		**8**	670	7.1	57	0.62	2.04	2.4	2.1	2.0					2500	4200					4200		
1.30	**BN 100LA**	**4**	1420	8.7	72	0.83	3.14	4.3	1.7	1.8	82	22	**FD 15**	40	1300	1700	86	28	**FA 15**	40	1700	86	29
0.70		**8**	700	9.6	58	0.64	2.72	2.8	1.8	1.8					2000	3400					3400		
1.8	**BN 100LB**	**4**	1420	12.1	69	0.87	4.3	4.2	1.6	1.7	95	25	**FD 15**	40	1200	1700	99	31	**FA 15**	40	1700	99	32
0.9		**8**	700	12.3	62	0.63	3.3	3.2	1.7	1.8					1600	2600					2600		
2.2	**BN 112M**	**4**	1440	14.6	77	0.85	4.9	5.3	1.8	1.8	168	32	**FD 06S**	60	—	1200	177	42	**FA 06S**	60	1200	177	43
1.2		**8**	710	16.1	70	0.63	3.9	3.3	1.9	1.8					—	2000					2000		
3.6	**BN 132S**	**4**	1440	24	80	0.82	7.9	6.5	2.1	1.9	295	45	**FD 56**	75	—	1000	305	58	**FA 06**	75	1000	305	59
1.8		**8**	720	24	72	0.55	6.6	4.6	1.9	2.0					—	1400					1400		
4.6	**BN 132M**	**4**	1450	30	81	0.83	9.9	6.5	2.2	1.9	383	56	**FD 06**	100	—	1000	393	69	**FA 07**	100	1000	406	74
2.3		**8**	720	31	73	0.54	8.4	4.4	2.3	2.0					—	1300					1300		

																G.S.-Bremse						W.S.-Bremse				
																FD						**FA**				
P$_n$ kW			**n** min^{-1}	**M$_n$** Nm	**IE1**	**η** (100%) %	**η** (75%) %	**η** (50%) %	**cosφ**	**In** **400V** A	**Is/In**	**Ms/Mn**	**Ma/Mn**	**J$_m$** **x 10^{-4}** kgm²	**IM B5** Kg	**Mod**	**Mb** Nm	**Z$_o$** 1/h NB	**Z$_o$** 1/h SB	**J$_m$** **x 10^{-4}** kgm²	**IM B5** Kg	**Mod**	**Mb** Nm	**Z$_o$** 1/h	**J$_m$** **x 10^{-4}** kgm²	**IM B5** Kg
0.18	**M 05A**	**2**	2730	0.63	○	59.9	56.9	51.9	0.77	0.56	3.0	2.1	2.0	2.0	3.2	**FD 02**	1.75	3900	4800	2.6	4.9	**FA 02**	1.75	4800	2.6	4.7
0.25	**M 05B**	**2**	2740	0.87	○	66.0	64.8	64.8	0.76	0.72	3.3	2.3	2.3	2.3	3.6	**FD 02**	1.75	3900	4800	3.0	5.3	**FA 02**	1.75	4800	3.0	5.1
0.37	**M 05C**	**2**	2800	1.26	○	69.1	66.8	66.8	0.78	0.99	3.9	2.6	2.6	3.3	4.8	**FD 02**	3.5	3600	4500	3.9	6.5	**FA 02**	3.5	4500	3.9	6.3
0.55	**M 1SD**	**2**	2820	1.86	○	76.0	75.8	74.8	0.76	1.37	5.0	2.9	2.8	4.1	5.8	**FD 03**	5	2900	4200	5.3	8.5	**FA 03**	5	4200	5.3	8.2
0.75	**M 1LA**	**2**	2810	2.6	○	76.6	76.2	76.2	0.76	1.86	5.1	3.1	2.8	5.0	6.9	**FD 03**	5	1900	3300	6.1	9.6	**FA 03**	5	3300	6.1	9.3
1.1	**M 2SA**	**2**	2800	3.8	●	76.4	76.2	75.0	0.81	2.57	4.8	2.8	2.4	9.0	8.8	**FD 04**	10	1500	3000	10.6	11.9	**FA 04**	10	3000	10.6	12.6
1.5	**M 2SB**	**2**	2800	5.1	●	79.1	79.5	77.2	0.81	3.4	4.9	2.7	2.4	11.4	10.6	**FD 04**	15	1300	2600	13.0	9.9	**FA 04**	15	2600	13.0	14.4
2.2	**M 3SA**	**2**	2880	7.3	●	82.7	82.1	81.0	0.80	4.8	6.3	2.9	2.7	24	15.5	**FD 15**	26	1100	2400	28	22	**FA 15**	26	2400	28	23
3	**M 3LA**	**2**	2860	10.0	●	81.5	81.3	77.4	0.79	6.7	5.6	2.6	2.2	31	18.7	**FD 15**	26	700	1600	35	25	**FA 15**	26	1600	35	26
4	**M 3LB**	**2**	2870	13.3	●	83.1	83.0	77.8	0.80	8.7	5.8	2.7	2.5	39	22	**FD 15**	40	450	900	43	28	**FA 15**	40	900	43	29
5.5	**M 4SA**	**2**	2890	18.2	●	84.7	84.5	81.2	0.84	11.2	5.9	2.6	2.2	101	33	**FD 06**	50	—	600	112	46	**FA 06**	50	600	112	47
7.5	**M 4SB**	**2**	2900	25	●	86.5	86.3	84.4	0.85	14.7	6.4	2.6	2.2	145	40	**FD 06**	50	—	550	154	53	**FA 06**	50	550	154	54
9.2	**M 4LA**	**2**	2930	30	●	87.0	86.5	83.6	0.86	17.7	6.7	2.8	2.3	178	51	**FD 56**	75	—	430	189	64	**FA 06**	75	430	189	65
11	**M 4LC**	**2**	2920	36	●	87.6	87.0	86.0	0.88	20.6	6.9	2.9	2.5	210	60											
15	**M 5SB**	**2**	2930	49	●	89.6	89.4	88.0	0.86	28.1	7.1	2.6	2.3	340	70											
18.5	**M 5SC**	**2**	2930	60	●	90.4	90.1	89.0	0.86	34	7.6	2.7	2.3	420	83											
22	**M 5LA**	**2**	2930	72	●	89.9	89.7	89.5	0.88	40	7.8	2.6	2.4	490	95											

○ = n.a. ● = IE1

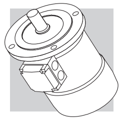

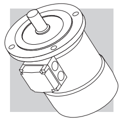

4P — $1500\ min^{-1}$ - S1 — 50 Hz

																G.S.-Bremse						W.S.-Bremse				
																FD						FA				
P_n kW			n min⁻¹	M_n Nm	IE1	η (100%) %	η (75%) %	η (50%) %	cosφ	In 400V A	Is/In	Ms/Mn	Ma/Mn	J_m x 10^{-4} kgm²	IM B5 Kg	Mod	Mb Nm	Z_o 1/h NB	Z_o 1/h SB	J_m x 10^{-4} kgm²	IM B5 Kg	Mod	Mb Nm	Z_o 1/h	J_m x 10^{-4} kgm²	IM B5 Kg
0.09	**M 0B**	**4**	1350	0.64	○	51.7	47.6	42.9	0.60	0.42	2.6	2.5	2.4	1.5	2.9											
0.12	**M 05A**	**4**	1350	0.85	○	59.8	56.2	47.0	0.62	0.47	2.6	1.9	1.8	2.0	3.2	**FD 02**	1.75	10000	13000	2.6	4.9	**FA 02**	1.75	13000	2.6	4.7
0.18	**M 05B**	**4**	1320	1.30	○	54.8	52.9	52.5	0.67	0.71	2.6	2.2	2.0	2.3	3.6	**FD 02**	3.5	10000	13000	3.0	5.3	**FA 02**	3.5	13000	3.0	5.1
0.25	**M 05C**	**4**	1340	1.78	○	65.3	65.0	57.9	0.69	0.80	2.7	2.1	1.9	3.3	4.8	**FD 02**	3.5	7800	10000	3.9	6.5	**FA 02**	3.5	10000	3.9	6.3
0.37	**M 1SD**	**4**	1370	2.6	○	66.8	66.7	63.0	0.76	1.05	3.7	2.0	1.9	6.9	5.5	**FD 03**	5	6000	9400	8.0	8.2	**FA 03**	5	9400	8.0	7.9
0.55	**M 1LA**	**4**	1380	3.8	○	69.0	68.9	68.8	0.74	1.55	4.1	2.3	2.3	9.1	6.9	**FD 53**	7.5	4300	8700	10.2	9.6	**FA 03**	7.5	8700	10.2	9.3
0.75	**M 2SA**	**4**	1400	5.1	●	75.0	74.5	69.3	0.78	1.85	4.9	2.7	2.5	20	9.2	**FD 04**	15	4100	7800	22	13.1	**FA 04**	15	7800	22	13.0
1.1	**M 2SB**	**4**	1400	7.5	●	76.4	76.2	70.4	0.78	2.66	5.1	2.8	2.5	25	10.6	**FD 04**	15	2600	5300	27	14.5	**FA 04**	15	5300	27	14.4
1.5	**M 3SA**	**4**	1410	10.2	●	79.6	80.5	79.3	0.77	3.5	4.6	2.1	2.1	34	15.5	**FD 15**	26	2800	4900	38	22	**FA 15**	26	4900	38	23
2.2	**M 3LA**	**4**	1410	14.9	●	81.1	81.4	79.9	0.75	5.2	4.5	2.2	2.0	40	17	**FD 15**	40	2600	4700	44	24	**FA 15**	40	4700	44	24
3	**M 3LB**	**4**	1410	20	●	82.6	83.8	83.7	0.77	6.8	5.0	2.3	2.2	54	21	**FD 15**	40	2400	4400	58	27	**FA 15**	40	4400	58	28
4	**M 3LC**	**4**	1400	27	○	82.7	83.1	80.5	0.78	9.0	4.7	2.3	2.2	61	23	**FD 55**	55	—	1300	65	29	**FA 15**	40	1300	65	30
5.5	**M 4SA**	**4**	1440	36	●	84.7	84.8	82.5	0.81	11.6	5.5	2.3	2.2	213	42	**FD 56**	75	—	1050	223	55	**FA 06**	75	1050	223	56
7.5	**M 4LA**	**4**	1440	50	●	86.0	86.3	85.3	0.81	15.5	5.7	2.5	2.4	270	51	**FD 06**	100	—	950	280	64	**FA 07**	100	950	280	65
9.2	**M 4LB**	**4**	1440	61	●	88.4	88.6	87.5	0.81	18.8	5.9	2.7	2.5	319	57	**FD 07**	150	—	900	342	73	**FA 07**	150	900	342	75
11	**M 4LC**	**4**	1440	73	●	87.6	87.8	86.0	0.81	22.4	6.0	2.7	2.5	360	65	**FD 07**	150	—	850	382	81	**FA 07**	150	850	382	83
15	**M 5SB**	**4**	1460	98	●	88.7	88.5	88.4	0.81	30.1	6.0	2.3	2.1	650	85	**FD 08**	200	—	750	725	115	**FA 08**	200	750	710	114
18.5	**M 5LA**	**4**	1460	121	●	89.3	89.5	89.2	0.81	37	6.2	2.6	2.5	790	101	**FD 08**	250	—	700	865	131	**FA 08**	250	700	850	130

○ = n.a. ● = IE1

6P — 1000 min^{-1} - S1 — 50 Hz

																G.S.-Bremse						W.S.-Bremse				
																FD						FA				
P_n kW			n min^{-1}	M_n Nm	IE1	η (100%) %	η (75%) %	η (50%) %	cosφ	In 400V A	Is/In	Ms/Mn	Ma/Mn	J_m x 10^{-4} kgm^2	IM B5 Kg	Mod	Mb Nm	Z_o 1/h NB	Z_o 1/h SB	J_m x 10^{-4} kgm^2	IM B5 Kg	Mod	Mb Nm	Z_o 1/h	J_m x 10^{-4} kgm^2	IM B5 Kg
0.09	**M 05A**	**6**	880	0.98	○	41.0	41.0	32.9	0.53	0.60	2.1	2.1	1.8	3.4	4.3	**FD 02**	3.5	9000	14000	4.0	6.0	**FA 02**	3.5	14000	4.0	5.8
0.12	**M 05B**	**6**	870	1.32	○	45.0	44.0	41.8	0.60	0.64	2.1	1.9	1.7	3.7	4.6	**FD 02**	3.5	9000	14000	4.3	6.3	**FA 02**	3.5	14000	4.3	6.1
0.18	**M 1SC**	**6**	900	1.91	○	55.0	55.5	51.0	0.69	0.68	2.6	1.9	1.7	8.4	5.1	**FD 03**	5	8100	13500	9.5	7.8	**FA 03**	5	13500	9.5	7.5
0.25	**M 1SD**	**6**	900	2.7	○	62.0	58.5	51.4	0.71	0.82	2.6	1.9	1.7	10.9	6.3	**FD 03**	5	7800	13000	12	9.0	**FA 03**	5	13000	12	8.7
0.37	**M 1LA**	**6**	910	3.9	○	66.0	60.0	53.3	0.69	1.17	3.0	2.4	2.0	12.9	7.3	**FD 53**	7.5	5100	9500	14	10.0	**FA 03**	7.5	9500	14	9.7
0.55	**M 2SA**	**6**	920	5.7	○	70.0	69.8	64.3	0.68	1.67	3.9	2.6	2.2	25	10.6	**FD 04**	15	4800	7200	27	14.5	**FA 04**	15	7200	27	14.4
0.75	**M 2SB**	**6**	920	7.8	●	70.0	70.0	64.4	0.65	2.38	3.8	2.5	2.2	28	11.5	**FD 04**	15	3400	6400	30	15.4	**FA 04**	15	6400	30	15.3
1.1	**M 3SA**	**6**	920	11.4	●	75.0	74.0	72.0	0.72	2.9	4.3	2.0	1.8	33	17	**FD 15**	26	2700	5000	37	23	**FA 15**	26	5000	37	24
1.5	**M 3LA**	**6**	940	15.2	●	75.2	74.2	70.3	0.72	4.0	4.1	2.1	2.0	82	21	**FD 15**	40	1900	4100	86	27	**FA 15**	40	4100	86	28
1.85	**M 3LB**	**6**	930	19.0	●	76.6	72.8	62.6	0.73	4.8	4.6	2.1	2.0	95	23	**FD 15**	40	1700	3600	99	29	**FA 15**	40	3600	99	30
2.2	**M 3LC**	**6**	930	23	●	77.7	76.8	72.4	0.71	5.8	4.7	2.3	2.1	95	23	**FD 55**	55	—	1900	99	29	**FA 15**	40	1900	99	30
3	**M 4SA**	**6**	940	30	●	79.7	77.0	75.1	0.76	7.1	5.1	1.9	1.8	216	34	**FD 56**	75	—	1400	226	47	**FA 06**	75	1400	226	48
4	**M 4LA**	**6**	950	40	●	81.4	81.5	79.5	0.77	9.2	5.5	2.0	1.8	295	43	**FD 06**	100	—	1200	305	56	**FA 07**	100	1200	305	57
5.5	**M 4LB**	**6**	945	56	●	83.1	80.9	79.1	0.78	12.2	6.1	2.1	1.9	383	54	**FD 07**	150	—	1050	406	70	**FA 07**	150	1050	406	72
7.5	**M 5SA**	**6**	955	75	●	85.0	85.0	84.8	0.81	15.7	5.9	2.2	2.0	740	69	**FD 08**	170	—	900	815	98	**FA 08**	170	900	800	98
11	**M 5SB**	**6**	960	109	●	86.4	86.5	85.9	0.81	22.7	6.6	2.5	2.3	970	89	**FD 08**	200	—	800	1045	119	**FA 08**	200	800	1030	118

○ = n.a. ● = IE1

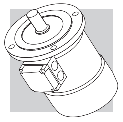

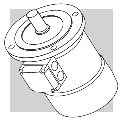

2/4P			3000/1500 min^{-1} - S1																				50 Hz
													G.S.-Bremse						W.S.-Bremse				
													FD						FA				
P_n			n	M_n	η	cosφ	In 400V	Is/In	Ms/Mn	Ma/Mn	J_m x 10^{-4}	IM B5 Kg	Mod	Mb	Z_o 1/h NB	Z_o 1/h SB	J_m x 10^{-4}	IM B5 Kg	Mod	Mb	Z_o 1/h	J_m x 10^{-4}	IM B5 Kg
kW			min^{-1}	Nm	%		A				kgm^2			Nm			kgm^2			Nm		kgm^2	
0.20	**M 05A**	**2**	2700	0.71	55	0.82	0.64	3.5	2.1	1.9	2.9	4.1	**FD 02**	3.5	2200	2600	3.5	5.8	**FA 02**	3.5	2600	3.5	5.6
0.15		**4**	1350	1.06	49	0.67	0.66	2.6	1.8	1.7					4000	5100					5100		
0.28	**M 1SB**	**2**	2700	0.99	56	0.82	0.88	2.9	1.9	1.7	4.7	4.0	**FD 03**	3.5	2100	2400	5.8	6.7	**FA 03**	3.5	2400	5.8	6.4
0.20		**4**	1370	1.39	59	0.68	1.02	3.1	1.8	1.7					3800	4800					4800		
0.37	**M 1SC**	**2**	2740	1.29	56	0.82	1.16	3.5	1.8	1.8	5.8	4.7	**FD 03**	5	1400	2100	6.9	7.4	**FA 03**	5	2100	6.9	7.1
0.25		**4**	1390	1.72	60	0.73	0.82	3.3	2.0	1.9					2900	4200					4200		
0.45	**M 1SD**	**2**	2780	1.55	63	0.85	1.21	3.8	1.8	1.8	6.9	5.5	**FD 03**	5	1400	2100	8.0	8.2	**FA 03**	5	2100	8.0	7.9
0.30		**4**	1400	2.0	63	0.74	0.93	3.8	2.1	1.9					2900	4200					4200		
0.55	**M 1LA**	**2**	2800	1.9	73	0.79	1.38	4.2	2.0	1.8	9.1	6.9	**FD 03**	5	1600	2200	10.2	9.6	**FA 03**	5	2200	10.2	9.3
0.37		**4**	1400	2.5	68	0.72	1.09	3.9	2.2	2.0					3300	4600					4600		
0.75	**M 2SA**	**2**	2780	2.6	65	0.85	1.96	3.8	1.9	1.8	20	9.2	**FD 04**	10	1400	1600	22	13.1	**FA 04**	10	1600	22	13.0
0.55		**4**	1400	3.8	68	0.81	1.44	3.9	1.7	1.7					2700	3600					3600		
1.1	**M 2SB**	**2**	2730	3.9	65	0.86	2.84	3.9	2.0	1.9	25	10.7	**FD 04**	10	1200	1500	27	14.5	**FA 04**	10	1500	27	14.5
0.75		**4**	1410	5.1	75	0.81	1.78	4.5	2.1	2.0					2300	3100					3100		
1.5	**M 3SA**	**2**	2830	5.1	74	0.83	3.5	4.7	2.1	2.0	34	15.5	**FD 15**	26	700	1000	38	22	**FA 15**	26	1000	38	23
1.1		**4**	1420	7.4	77	0.78	2.6	4.3	2.1	2.0					1600	2600					2600		
2.2	**M 3LA**	**2**	2800	7.5	72	0.85	5.2	4.5	2.0	1.9	40	17	**FD 15**	26	600	900	44	24	**FA 15**	26	900	44	24
1.5		**4**	1410	10.2	73	0.79	3.8	4.7	2.0	2.0					1300	2300					2300		
3.5	**M 3LB**	**2**	2850	11.7	80	0.84	7.5	5.4	2.2	2.1	61	23	**FD 15**	40	500	900	65	29	**FA 15**	40	900	65	30
2.5		**4**	1420	16.8	82	0.80	5.5	5.2	2.2	2.2					1000	2100					2100		
4.8	**M 4 SA**	**2**	2900	15.8	81	0.88	9.7	6.0	2.0	1.9	213	42	**FD 06**	50	—	400	233	55	**FA 06**	50	400	233	56
3.8		**4**	1430	25.4	81	0.84	8.1	5.2	2.1	2.1					—	950					950		
5.5	**M 4SB**	**2**	2890	18.2	80	0.87	11.4	5.9	2.4	2.0	213	42	**FD 56**	75	—	350	223	55	**FA 06**	75	350	223	56
4.4		**4**	1440	29	82	0.84	9.2	5.3	2.2	2.0					—	900					900		
7.5	**M 4LA**	**2**	2900	25	82	0.87	15.2	6.5	2.4	2.0	270	51	**FD 06**	100	—	350	280	64	**FA 07**	100	350	280	65
6		**4**	1430	40	84	0.85	12.1	5.8	2.3	2.1					—	950					950		
9.2	**M 4LB**	**2**	2920	30	83	0.86	18.6	6.0	2.6	2.2	319	57	**FD 07**	150	—	300	342	73	**FA 07**	150	300	342	75
7.3		**4**	1440	48	85	0.85	14.6	5.5	2.3	2.1					—	800					800		

2/6P 3000/1000 min^{-1} - S3 60/40% 50 Hz

													G.S.-Bremse						W.S.-Bremse				
													FD						FA				
P_n kW			n min^{-1}	M_n Nm	η %	cosφ	In 400V A	Is/In	Ms/Mn	Ma/Mn	J_m x 10^{-4} kgm²	IM B5 Kg	Mod	Mb Nm	Z_o 1/h NB	Z_o 1/h SB	J_m x 10^{-4} kgm²	IM B5 Kg	Mod	Mb Nm	Z_o 1/h	J_m x 10^{-4} kgm²	IM B5 Kg
0.25	**M 1SA**	**2**	2850	0.84	60	0.82	0.73	4.3	1.9	1.8	6.9	5.5	**FD 03**	1.75	1500	1700	8.0	8.2	**FA 03**	1.75	1700	8.0	7.9
0.08		**6**	910	0.84	43	0.70	0.38	2.1	1.4	1.5					10000	13000					13000		
0.37	**M 1LA**	**2**	2880	1.23	62	0.80	1.08	4.4	1.9	1.8	9.1	6.9	**FD 03**	3.5	1000	1300	10.2	9.6	**FA 03**	3.5	1300	10.2	9.3
0.12		**6**	900	1.27	44	0.73	0.54	2.4	1.4	1.5					9000	11000					11000		
0.55	**M 2SA**	**2**	2800	1.88	63	0.86	1.47	4.5	1.9	1.7	20	9.2	**FD 04**	5	1500	1800	22	13.1	**FA 04**	5	1800	22	13.0
0.18		**6**	930	1.85	52	0.65	0.77	3.3	2.0	1.9					4100	6300					6300		
0.75	**M 2SB**	**2**	2800	2.6	66	0.87	1.89	4.3	1.8	1.6	25	10.6	**FD 04**	5	1700	1900	27	14.5	**FA 04**	5	1900	27	14.4
0.25		**6**	930	2.6	54	0.67	1.00	3.2	1.7	1.8					3800	6000					6000		
1.1	**M 3SA**	**2**	2870	3.7	71	0.82	2.73	4.9	1.8	1.9	34	15.5	**FD 15**	13	1000	1300	38	22	**FA 15**	13	1300	38	23
0.37		**6**	930	3.8	63	0.70	1.21	3.1	1.5	1.8					3500	5000					5000		
1.5	**M 3LA**	**2**	2880	5.0	73	0.84	3.53	5.1	1.9	2.0	40	17	**FD 15**	13	1000	1200	44	24	**FA 15**	13	1200	44	24
0.55		**6**	940	5.6	64	0.67	1.85	3.5	1.7	1.8					2900	4000					4000		
2.2	**M 3LB**	**2**	2900	7.2	77	0.85	4.9	5.9	2.0	2.0	61	23	**FD 15**	26	700	900	65	29	**FA 15**	26	900	65	30
0.75		**6**	950	7.5	67	0.64	2.5	3.3	1.9	1.8					2100	3000					3000		
3	**M 4SA**	**2**	2910	9.9	74	0.88	6.6	5.6	2.0	2.1	170	36	**FD 56**	37	—	600	182	48	**FA 06**	37	600	182	50
1.1		**6**	960	10.9	73	0.68	3.2	4.5	2.2	2.0					—	2200					2200		
4.5	**M 4SB**	**2**	2910	14.8	78	0.84	9.9	5.8	1.9	1.8	213	42	**FD 56**	37	—	500	223	55	**FA 06**	37	500	223	56
1.5		**6**	960	14.9	74	0.67	4.4	4.2	1.9	2.0					—	2100					2100		
5.5	**M 4LA**	**2**	2920	18.0	78	0.87	11.7	6.2	2.1	1.9	270	51	**FD 06**	50	—	400	280	64	**FA 06**	50	400	280	65
2.2		**6**	960	22	77	0.71	5.8	4.3	2.1	2.0					—	1900					1900		

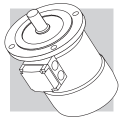

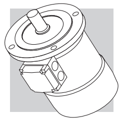

2/8P 3000/750 min^{-1} - S3 60/40% 50 Hz

												G.S.-Bremse						W.S.-Bremse				
												FD						FA				
P_n kW			n min^{-1}	M_n Nm	η %	cosφ	In 400V A	Is/In	Ms/Mn	Ma/Mn	J_m x 10^{-4} kgm^2	IM B5 Kg	Mod	Mb Nm	Z_o 1/h NB	Z_o 1/h SB	J_m x 10^{-4} kgm^2	IM B5 Kg	Mod	Mb Nm	Z_o 1/h	J_m x 10^{-4} kgm^2	IM B5 Kg
0.37	**M 1LA**	**2**	2800	1.26	63	0.86	0.99	3.9	1.8	1.9	12.9	7.3	**FD 03**	3.5	1200	1300	14	10.0	**FA 03**	3.5	1300	14	9.7
0.09		**8**	670	1.28	34	0.75	0.51	1.8	1.4	1.5					9500	13000					13000		
0.55	**M 2SA**	**2**	2830	1.86	66	0.86	1.40	4.4	2.1	2.0	20	9.2	**FD 04**	5	1500	1800	22	13.1	**FA 04**	5	1800	22	13.0
0.13		**8**	690	1.80	41	0.64	0.72	2.3	1.6	1.7					5600	8000					8000		
0.75	**M 2SB**	**2**	2800	2.6	68	0.88	1.81	4.6	2.1	2.0	25	10.6	**FD 04**	10	1700	1900	27	14.5	**FA 04**	10	1900	27	14.4
0.18		**8**	690	2.5	43	0.66	0.92	2.3	1.6	1.7					4800	7300					7300		
1.1	**M 3SA**	**2**	2870	3.7	69	0.84	2.74	4.6	1.8	1.7	34	15.5	**FD 15**	13	1000	1300	38	22	**FA 15**	13	1300	38	23
0.28		**8**	690	3.9	44	0.56	1.64	2.3	1.4	1.7					3400	5000					5000		
1.5	**M 3LA**	**2**	2880	5.0	69	0.85	3.69	4.7	1.9	1.8	40	17	**FD 15**	13	1000	1200	44	24	**FA 15**	13	1200	44	24
0.37		**8**	690	5.1	46	0.63	1.84	2.1	1.6	1.6					3300	5000					5000		
2.4	**M 3LB**	**2**	2900	7.9	75	0.82	5.6	5.4	2.1	2.0	61	23	**FD 15**	26	550	700	65	29	**FA 15**	26	700	65	30
0.55		**8**	700	7.5	54	0.58	2.5	2.6	1.8	1.8					2000	3500					3500		
3	**M 4SA**	**2**	2920	9.8	72	0.85	7.1	5.6	2.0	1.8	162	36	**FD 56**	37	—	600	182	48	**FA 06**	37	600	182	50
0.75		**8**	710	10.1	61	0.64	2.8	3.0	1.7	1.8					—	3400					3400		
4	**M 4SB**	**2**	2870	13.3	73	0.84	9.4	5.6	2.3	2.4	213	42	**FD 56**	37	—	500	223	55	**FA 06**	37	500	223	56
1		**8**	690	13.8	66	0.62	3.5	2.9	1.9	1.8					—	3500					3500		
5.5	**M 4LA**	**2**	2870	18.3	75	0.84	12.6	6.1	2.4	2.5	270	51	**FD 06**	50	—	400	280	64	**FA 06**	50	400	280	65
1.5		**8**	690	21	68	0.63	5.1	2.9	1.9	1.9					—	2400					2400		

2/12P — 3000/500 min^{-1} - S3 60/40% — 50 Hz

													G.S.-Bremse						W.S.-Bremse				
													FD						FA				
P_n kW	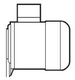		n min^{-1}	M_n Nm	η %	cosφ	In 400V A	Is/In	Ms/Mn	Ma/Mn	J_m x 10^{-4} kgm^2	IM B5 Kg	Mod	Mb Nm	Z_o 1/h NB	SB	J_m x 10^{-4} kgm^2	IM B5 Kg	Mod	Mb Nm	Z_o 1/h	J_m x 10^{-4} kgm^2	IM B5 Kg
0.55	**M 2SA**	**2**	2820	1.86	64	0.89	1.39	4.2	1.6	1.7	25	10.6	**FD 04**	5	1000	1300	27	14.5	**FA 04**	5	1300	27	14.4
0.09		**12**	430	2.0	30	0.63	0.69	1.8	1.9	1.8					8000	12000					12000		
0.75	**M 3SA**	**2**	2900	2.5	65	0.81	2.06	5.2	1.9	2.1	34	15.5	**FD 15**	13	700	900	38	22	**FA 15**	13	900	38	23
0.12		**12**	460	2.5	33	0.43	1.22	1.9	1.3	1.6					5000	7000					7000		
1.1	**M 3LA**	**2**	2850	3.7	65	0.85	2.87	4.5	1.6	1.8	40	17	**FD 15**	13	700	900	44	24	**FA 15**	13	900	44	24
0.18		**12**	430	4.0	26	0.54	1.85	1.5	1.3	1.5					4000	6000					6000		
1.5	**M 3LB**	**2**	2900	4.9	67	0.86	3.76	5.6	1.9	1.9	54	21	**FD 15**	13	700	900	58	27	**FA 15**	13	900	58	28
0.25		**12**	440	5.4	36	0.46	2.18	1.8	1.7	1.8					3800	5000					5000		
2	**M 3LC**	**2**	2850	6.7	70	0.84	4.9	4.9	1.8	1.7	61	23	**FD 55**	18	—	700	65	29	**FA 15**	18	700	65	30
0.3		**12**	450	6.4	38	0.47	2.4	1.7	1.6	1.7					—	3500					3500		
3	**M 4SA**	**2**	2920	9.8	74	0.87	6.7	6.8	2.3	1.9	213	42	**FD 56**	37	—	450	223	55	**FA 06**	37	450	223	56
0.5		**12**	470	10.2	51	0.43	3.3	2.0	1.7	1.6					—	3000					3000		
4	**M 4LA**	**2**	2920	13.1	75	0.89	8.6	5.9	2.4	2.3	270	51	**FD 56**	37	—	400	280	64	**FA 06**	37	400	280	65
0.7		**12**	460	14.5	53	0.44	4.3	1.9	1.7	1.6					—	2800					2800		

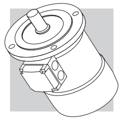

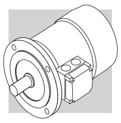

M11 MOTORENABMESSUNGEN

BN - IM B5

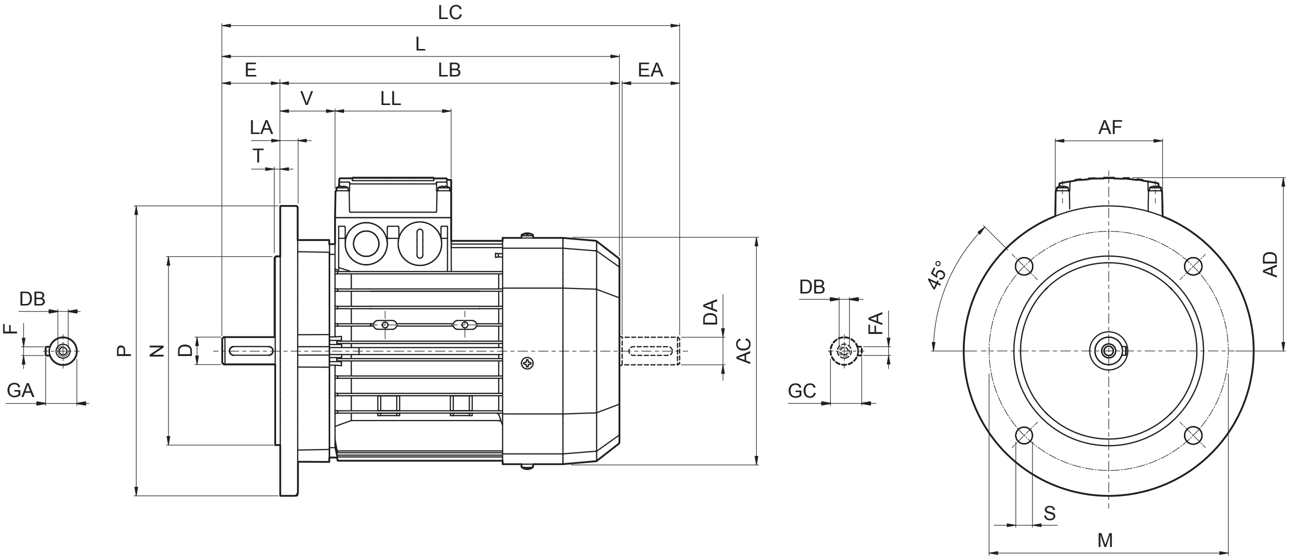

	Welle					Flansch						Motor							
	D **DA**	**E** **EA**	**DB**	**GA** **GC**	**F** **FA**	**M**	**N**	**P**	**S**	**T**	**LA**	**AC**	**L**	**LB**	**LC**	**AD**	**AF**	**LL**	**V**
BN 56	9	20	M3	10.2	3	100	80	120	7	3	8	110	185	165	207	91	74	80	34
BN 63	11	23	M4	12.5	4	115	95	140	9.5		10	121	207	184	232	95			26
BN 71	14	30	M5	16	5	130	110	160		3.5		138	249	219	281	108			37
BN 80	19	40	M6	21.5	6	165	130	200	11.5		11.5	156	274	234	315	119			38
BN 90	24	50	M8	27	8							176	326	276	378	133	98	98	44
BN 100	28	60	M10	31		215	180	250	14	4	14	195	367	307	429	142			50
BN 112											15	219	385	325	448	157			52
BN 132	38	80	M12	41	10	265	230	300			20	258	493	413	576	193	118	118	58
BN 160 MR	42 38$^{(1)}$	110 80$^{(1)}$	M16 M12$^{(1)}$	45 41$^{(1)}$	12 10$^{(1)}$	300	250	350	18.5	5	15		562	452	645				218
BN 160 M												310	596	486	680	245	187	187	51
BN 160 L																			
BN 180 M	48 38$^{(1)}$	110 110$^{(1)}$		51.5 41$^{(1)}$	14 10$^{(1)}$							310	640	530	724				
BN 180 L	48 42$^{(1)}$		M16 M16$^{(1)}$	51.5 45$^{(1)}$	14 12$^{(1)}$						18	348	708	598	823	261			52
BN 200 L	55 42$^{(1)}$		M20 M16$^{(1)}$	59 45$^{(1)}$	16 12$^{(1)}$	350	300	400					722	612	837				66

HINWEIS:
1) Diese Maße betreffen das zweite Wellenende.

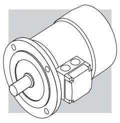

BN_FD ; IM B5

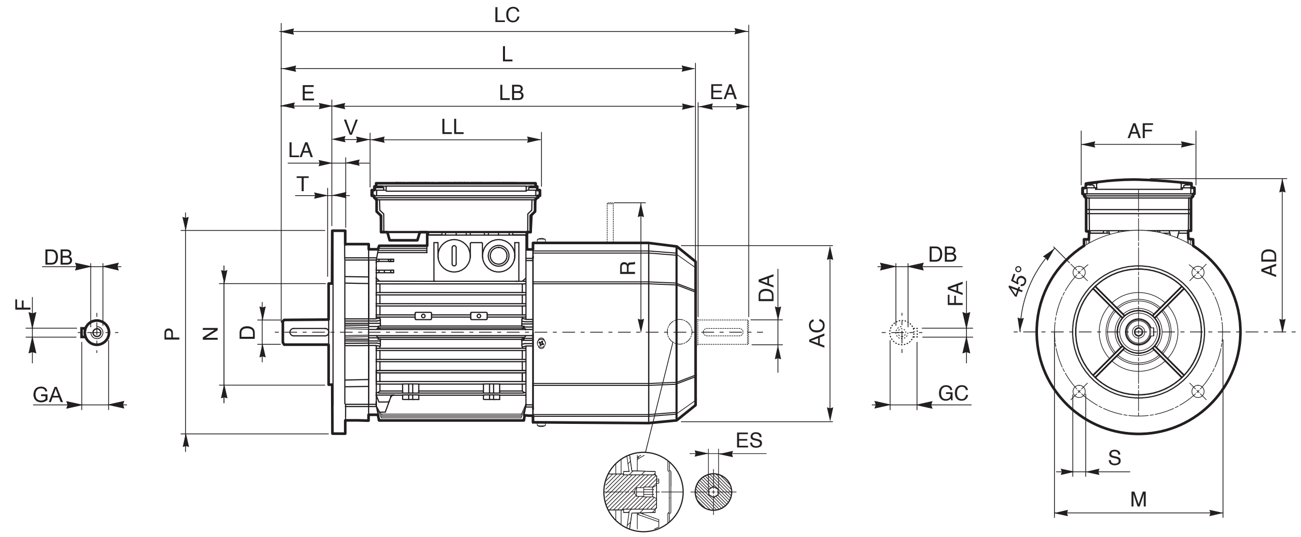

	Welle					Flansch						Motor									
	D DA	E EA	DB	GA GC	F FA	M	N	P	S	T	LA	AC	L	LB	LC	AD	AF	LL	V	R	ES
BN 63	11	23	M4	12.5	4	115	95	140	9.5	3	10	121	272	249	297	122	98	133	14	96	5
BN 71	14	30	M5	16	5	130	110	160	9.5	3.5		138	310	280	342	135			25	103	
BN 80	19	40	M6	21.5	6	165	130	200	11.5		11.5	156	346	306	388	146			41	129	
BN 90 S	24	50	M8	27	8							176	409	359	461	149	110	165	39		6
BN 90 L																146				160	
BN 100	28	60	M10	31		215	180	250	14	4	14	195	458	398	521	158		165	62		
BN 112											15	219	484	424	547	173		165	73	199	
BN 132	38	80	M12	41	10	265	230	300			20	258	603	523	686	210	140	188	46	204$^{(2)}$	
BN 160 MR	42 38$^{(1)}$	110 80$^{(1)}$	M16 M12$^{(1)}$	45 41$^{(1)}$	12 10$^{(1)}$	300	250	350	18.5	5	15		672	562	755				161	226	
BN 160 M												310	736	626	820	245	187	187	51	266	—
BN 160 L	42 38$^{(1)}$																				
BN 180 M	48 38$^{(1)}$			51.5 41$^{(1)}$	14 10$^{(1)}$								780	670	864						
BN 180 L	48 42$^{(1)}$	110 110$^{(1)}$	M16 M16$^{(1)}$	51.5 45$^{(1)}$	14 12$^{(1)}$						18	348	866	756	981	261			52	305	
BN 200 L	55 42$^{(1)}$		M20 M16$^{(1)}$	59 45$^{(1)}$	16 12$^{(1)}$	350	300	400	18.5				878	768	993				64		

HINWEIS:
1) Diese Maße betreffen das zweite Wellenende.
2) Für Bremse FD07, Maß R=226.

Der Sechskant ES ist bei der Option PS nicht vorhanden.

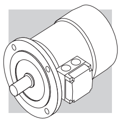

BN_FA - IM B5

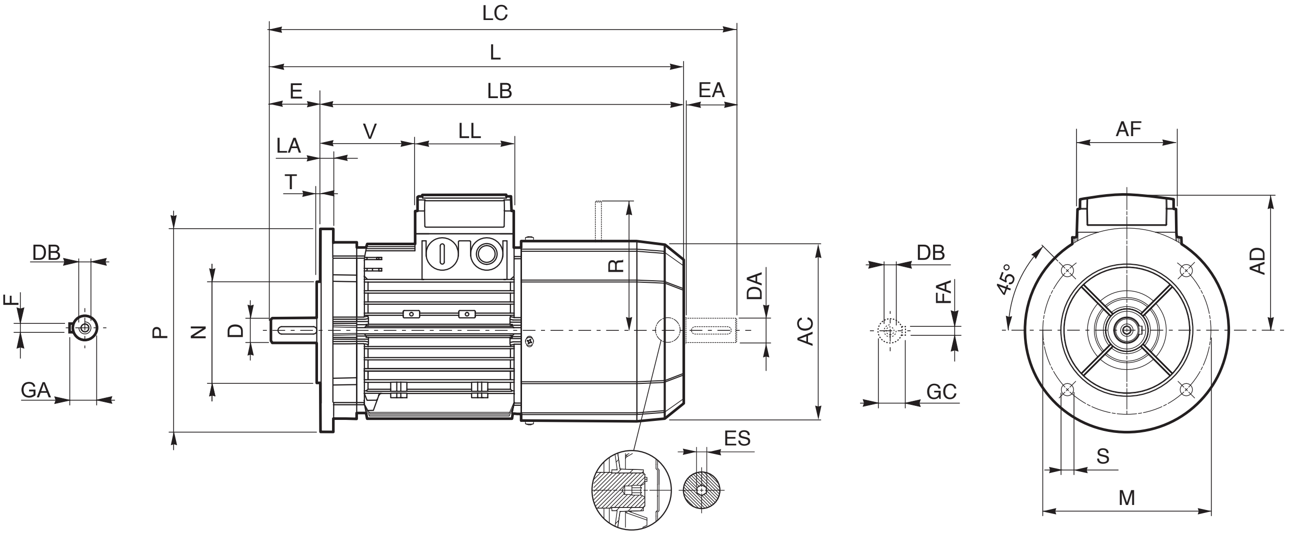

	Welle					Flansch						Motor									
	D **DA**	**E** **EA**	**DB**	**GA** **GC**	**F** **FA**	**M**	**N**	**P**	**S**	**T**	**LA**	**AC**	**L**	**LB**	**LC**	**AD**	**AF**	**LL**	**V**	**R**	**ES**
BN 63	11	23	M4	12.5	4	115	95	140	9.5	3	10	121	272	249	297	95	74	80	26	116	5
BN 71	14	30	M5	16	5	130	110	160		3.5		138	310	280	342	108			68	124	
BN 80	19	40	M6	21.5	6	165	130	200	11.5		11.5	156	346	306	388	119			83	134	
BN 90	24	50	M8	27	8							176	409	359	461	133	98	98	95	160	6
BN 100	28	60	M10	31		215	180	250	14	4	14	195	458	398	521	142			119		
BN 112											15	219	484	424	547	157			128	198	
BN 132	38	80	M12	41	10	265	230	300			20	258	603	523	686	210	140	188	46	200$^{(2)}$	
BN 160 MR	42 38$^{(1)}$	110 80$^{(1)}$	M16 M12$^{(1)}$	45 41$^{(1)}$	12 10$^{(1)}$	300	250	350	18.5	5	15		672	562	755	193	118	118	218	217	
BN 160 M												310	736	626	820	245	187	187	51	247	—
BN 160 L																					
BN 180 M	48 38$^{(1)}$			51.5 41$^{(1)}$	14 10$^{(1)}$								780	670	864						

HINWEIS:
1) Diese Maße betreffen das zweite Wellenende.
2) Für Bremse FA07, Maß R=217.

Die Abmessungen des Klemmkastens der Motoren BN ... FA AD, AF, LL und V in Bezug auf die separate Spannungsversorgung (Option SA) stimmen mit den Abmessungen der entsprechenden Motoren BN...FD überein.

Der Sechskant ES ist bei der Option PS nicht vorhanden.

M

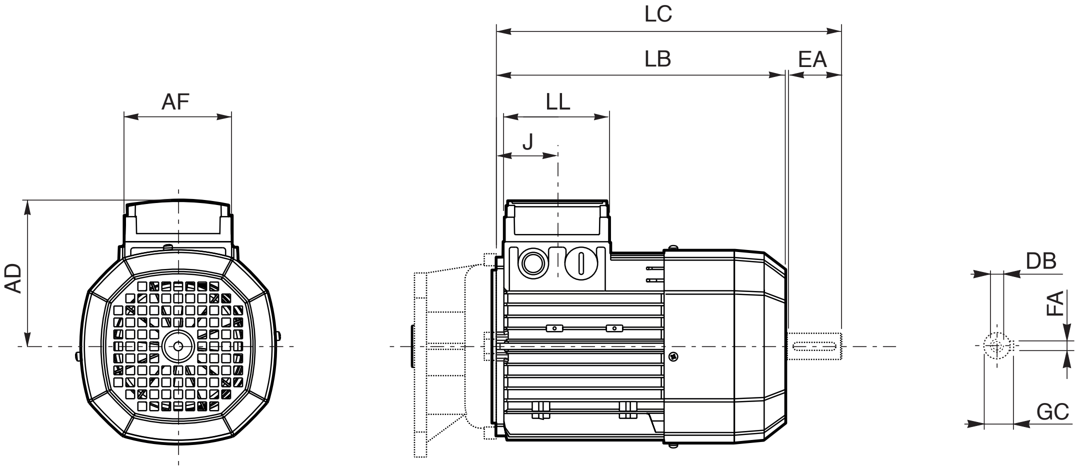

	Zweite Wellenende					Motor						
	DA	**EA**	**DB**	**FA**	**GC**	**AC**	**LB**	**LC**	**AF**	**LL**	**J**	**AD**
M 0	9	20	M3	3	10.2	110	133	155	74	80	42	91
M 05	11	23	M4	4	12.5	121	165	191			48	95
M 1	14	30	M5	5	16	138	187	219			45	108
M 2 S	19	40	M6	6	21.5	156	202	245			44	119
M 3 S	28	60	M10	8	31	195	230	293	98	98	53.5	142
M 3 L							262	325				
M 4	38	80	M12	10	41	258	361	444	118	118	64.5	193
M 4 LC							396	479				
M 5 S						310	418	502	187	187	77	245
M 5 L							462	546				

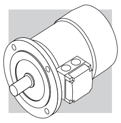

M_FD

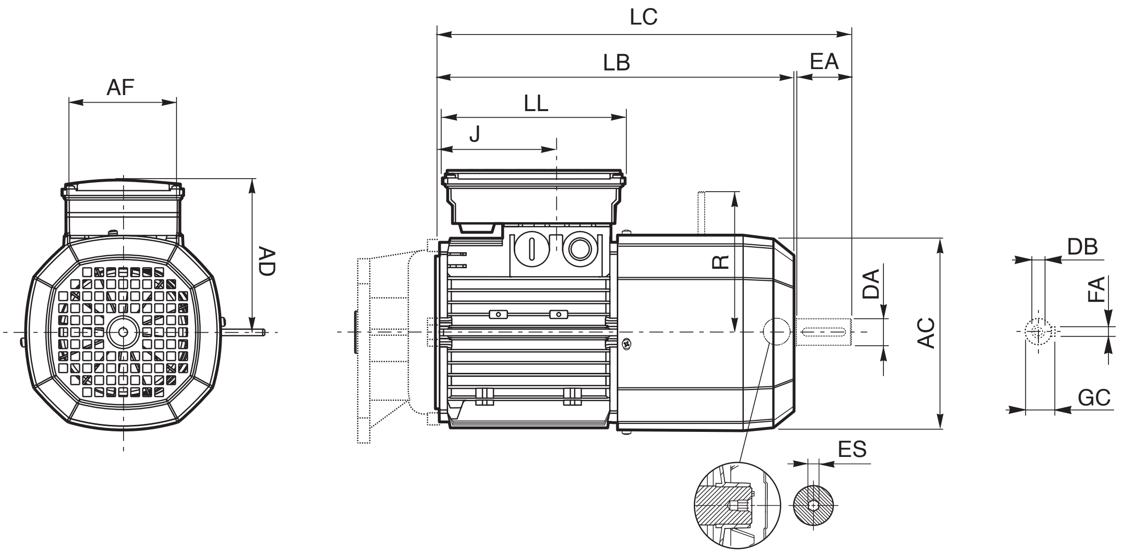

	Zweite Wellenende					Motor								
	DA	**EA**	**DB**	**FA**	**GC**	**AC**	**LB**	**LC**	**AF**	**LL**	**J**	**AD**	**R**	**ES**
M 05	11	23	M4	4	12.5	121	231	256	98	133	48	122	96	5
M 1	14	30	M5	5	16	138	248	280			73	135	103	
M 2 S	19	40	M6	6	21.5	156	272	314			88	146	129	
M 3 S	28	60	M10	8	31	195	326	389	110	165	124.5	158	160	6
M 3 L							353	416						
M 4	38	80	M12	10	41	258	470	553	140	188	185.5	210	204 (1)	
M 4 LC							495	578			64.5		226	
M 5 S						310	558	642	187	187	77	245	266	—
M 5 L							602	686						

HINWEIS:
1) Für Bremse FD07, Maß R=226.

Der Sechskant ES ist bei der Option PS nicht vorhanden.

M_FA

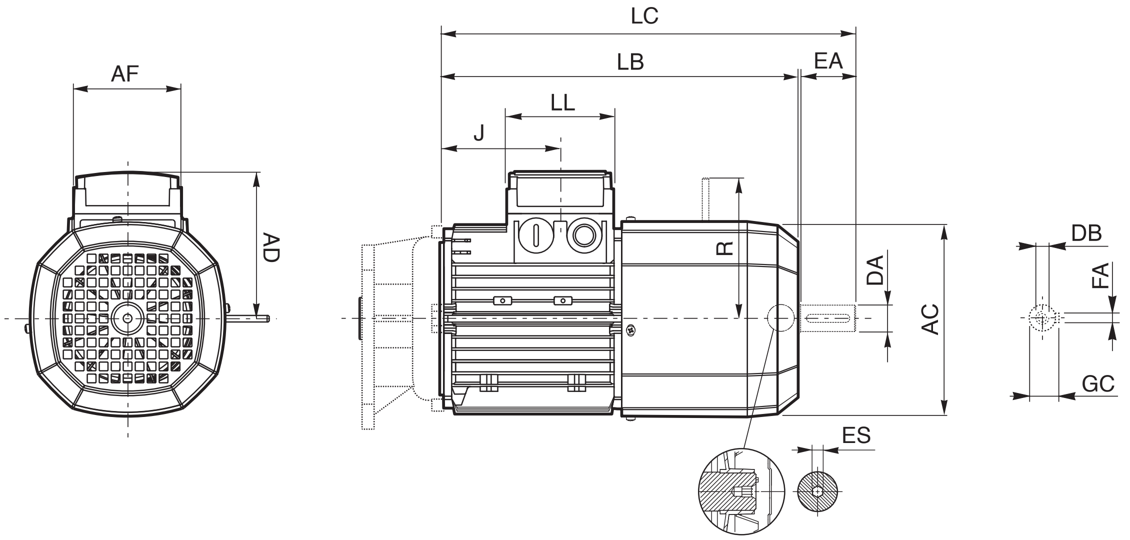

	Zweite Wellenende					Motor								
	DA	**EA**	**DB**	**FA**	**GC**	**AC**	**LB**	**LC**	**AF**	**LL**	**J**	**AD**	**R**	**ES**
M 05	11	23	M4	4	12.5	121	231	256	74	80	48	95	116	5
M 1	14	30	M5	5	16	138	248	280			73	108	124	
M 2 S	19	40	M6	6	21.5	156	272	314			88	119	134	
M 3 S	28	60	M10	8	31	195	326	389	98	98	124.5	142	160	6
M 3 L							353	416						
M 4	38	80	M14	10	41	258	470	553	140	188	185.5	210	200 (1)	
M 4 LC							495	578			64.5		217	
M 5 S			M12			310	558	642	187	187	77	245	247	—
M 5 L							602	686						

HINWEIS:
1) Für Bremse FA07, Maß R=217.

Die Abmessungen des Klemmkastens der Motoren M ...FA AD, AF, LL und V in Bezug auf die separate Spannungsversorgung (Option SA) stimmen mit den Abmessungen der entsprechenden Motoren M...FD überein.

Der Sechskant ES ist bei der Option PS nicht vorhanden.

LISTE DER ÄNDERUNGEN

BR_CAT_CAFS_STD_DEU_R10_0	
🗋	**Beschreibung**
100, 246, 402	Aktualisierte IEC Baumöglichkeiten.
322…324	Aktualisiertes Kapitel “Beschreibung der Atex-zulassung”.
424…433	Aktualisierte FL-Option für Getriebe F10 ... F25 und zugehörige Maßzeichnungen.
477…500	Übersetzungsverhältnis von S101_3.9 auf S101_3.8 korrigiert.
502…511	Bohrungsgröße der Abtriebswelle für Getriebe S10 ... S50 korrigiert.

2019 12 20

Diese Veröffentlichung annuliert und ersetzt jede vorhergehende Ausgabe oder Revision. BONFIGLIOLI behält sich das Recht vor, Änderungen ohne vorherige Informationen durchzuführen.

Bonfiglioli
Forever Forward

Wir verpflichten uns kompromisslos zu Qualität, Innovation und Nachhaltigkeit. Unser Team entwickelt, vertreibt und wartet erstklassige Energieübertragungs- und Antriebslösungen, um die Welt in Bewegung zu halten.

HEADQUARTERS
Bonfiglioli Riduttori S.p.A.
Via Giovanni XXIII, 7/A
40012 Lippo di Calderara di Reno
Bologna (Italy)
www.bonfiglioli.com